HARTING

Pushing Performance

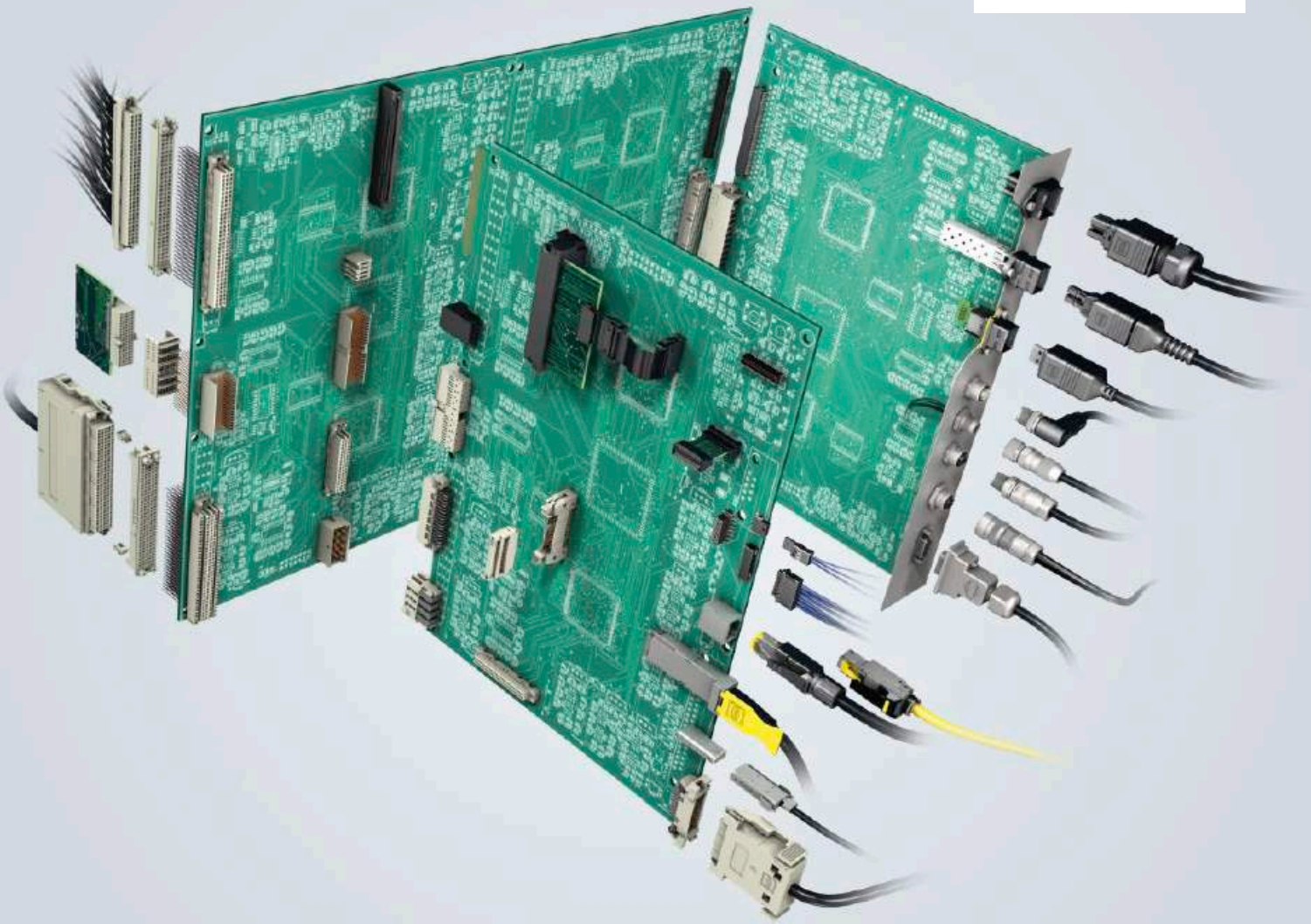

People | Power | Partnership

HARTING
Device Connectivity

Transforming customer wishes into concrete solutions

The HARTING Technology Group is skilled in the fields of electrical, electronic and optical connection, transmission and networking technology, as well as in manufacturing, mechatronics and software creation. The Group uses these skills to develop customized solutions and products such as connectors for energy and data-transmission/data-networking applications, including, for example, mechanical engineering, rail technology, wind energy plants, factory automation and the telecommunications sector. In addition, HARTING also produces electro-magnetic components for the automobile industry and offers solutions in the field of hydraulic technology and shop systems.

The HARTING Group currently comprises 53 sales companies and production plants worldwide employing a total of about 4,200 staff.

HARTING Subsidiary

HARTING Representation

We aspire to top performance.

Connectors ensure functionality. As core elements of electrical and optical termination, connection and infrastructure technologies, they are essential in enabling the modular construction of devices, machines and systems across an extremely wide range of industrial applications. Their reliability is a crucial factor guaranteeing smooth functioning in the manufacturing area, telecommunications, applications in medical technology – in short, connectors are at work in virtually every conceivable application area. Thanks to the ongoing development of our technologies, our customers enjoy investment security and benefit from durable, long-term functionality.

Wherever our customers are, we're there.

Increasing industrialization is creating growing markets that are characterized by widely diverging demands and requirements. What these markets all share in common is the quest for perfection, increasingly efficient processes and reliable technologies. HARTING is providing these technologies – in Europe, the Americas and Asia. In order to implement customer requirements in the best possible manner, the HARTING professionals at our international subsidiaries engage in up-close, partnership-based interaction with our customers, right from the very early product development phase.

Our on-site staff form the interface to the centrally coordinated development and production departments. In this way, our customers can rely on consistently high, superior product quality – worldwide.

Our claim: Pushing Performance.

HARTING provides more than optimally attuned components. In order to offer our customers the best possible solutions, on request HARTING contributes a great deal more and is tightly integrated into the value-creation process.

From ready-assembled cables through to control racks or ready-to-go control desks. Our aim is to generate maximum benefit for our customers – with no compromises!

Quality creates reliability – and warrants trust.

The HARTING brand stands for superior quality and reliability – worldwide. The standards we set are the result of consistent, stringent quality management that is subject to regular certifications and audits.

EN ISO 9001, the EU Eco-Audit and ISO 14001 are key elements here. We take a proactive stance towards new requirements, which is why HARTING is the first company worldwide to have obtained the IRIS quality certificate for rail vehicles.

HARTING technology creates added value for customers.

Technologies by **HARTING** are at work worldwide. HARTING's presence stands for smoothly functioning systems powered by intelligent connectors, smart infrastructure solutions and sophisticated network systems. Over the course of many years of close, trust-based cooperation with its customers, the **HARTING** Technology Group has become one of the leading specialists globally for connector technology. We offer individual customers specific and innovative solutions that go beyond the basic standard functionalities. These tailored solutions deliver sustained results, ensure investment security and enable customers to achieve significant added value.

Opting for HARTING opens up an innovative, complex world of concepts and ideas.

In order to develop and produce connectivity and network solutions serving an exceptionally wide range of connector applications in a professional and cost-effective manner, **HARTING** not only commands the full array of conventional tools and basic technologies. Above and beyond these capabilities, **HARTING** is constantly harnessing and refining its broad base of knowledge and experience to create new solutions that also ensure continuity. To secure its lead in know-how, HARTING draws on a wealth of sources from its in-house research and applications.

Salient examples of these sources of innovative knowledge include microstructure technologies, 3D design and connection technology, high-temperature and ultrahigh-frequency applications that are finding use in telecommunications and automation networks, in the automotive industry, or in industrial sensor and actuator applications, RFID and wireless technologies, in addition to packaging and housing made of plastics, aluminum and stainless steel.

HARTING overcomes technological limitations.

Drawing on the comprehensive resources of the group's technology pool, **HARTING** devises practical solutions for its customers. Whether this involves industrial networks for manufacturing automation, or hybrid interface solutions for wireless telecommunication infrastructures, 3D circuit carriers with microstructures, or cable assemblies for high-temperature applications in the automotive industry – **HARTING** technologies offer not only components, but comprehensive solutions attuned to individual customer requirements and preferences. The range of cost-effective solutions covers ready-to-use cable configurations, completely assembled backplanes and board system carriers, as well as fully wired and tested control panels.

In order to ensure the future-proof design of RF and EMC-compatible interface solutions, the central HARTING laboratory (accredited according to DIN EN ISO/IEC 17 025) employs simulation tools, as well as experimental, testing and diagnostics facilities all the way to Industrial computed tomography. In addition to product and process suitability considerations, lifecycle and environmental aspects play a key role in the selection of materials and processes.

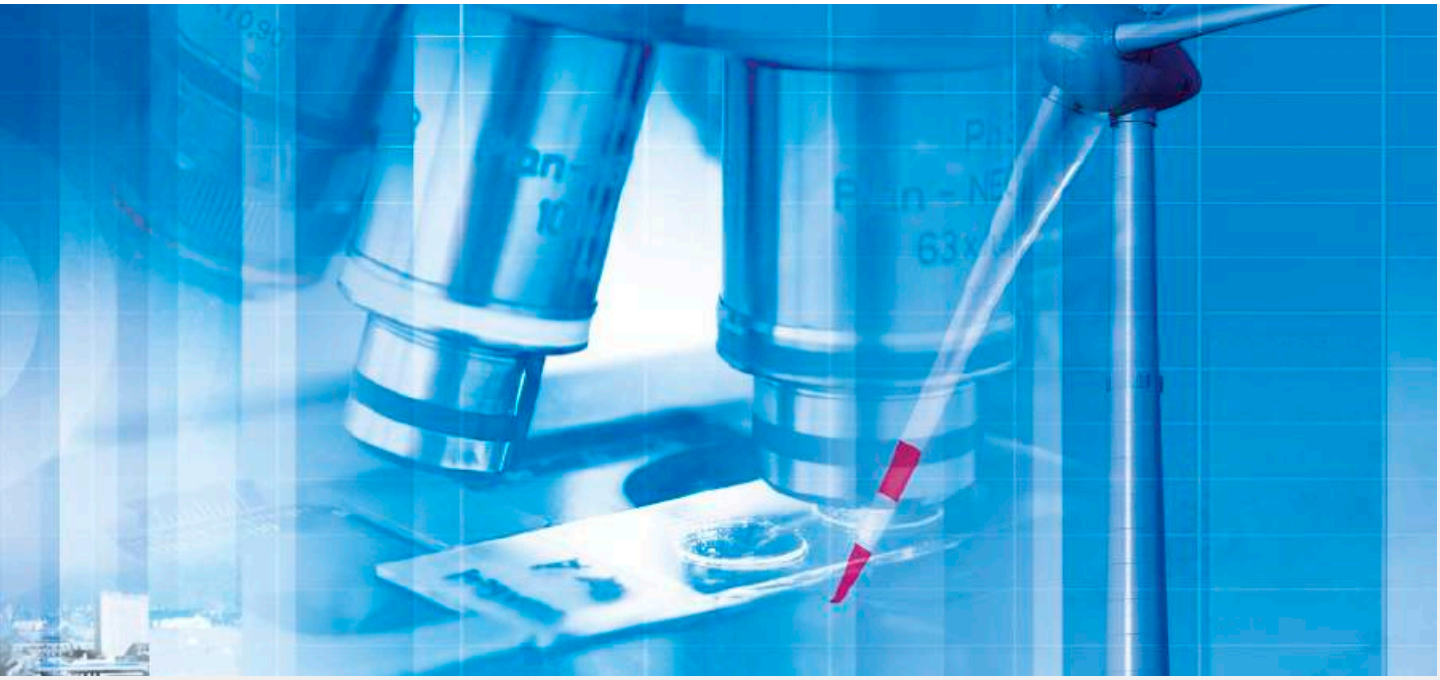

HARTING's knowledge is practical know-how that generates synergy effects.

HARTING commands decades of experience with regard to the applications conditions involved in connections in telecommunications, computer, network and medical technologies, as well as industrial automation technologies, e.g. in the mechanical engineering and plant engineering areas, in addition to the power generation industry and the transportation sector. **HARTING** is highly conversant with the specific application areas in all of these technology fields. In every solution approach, the key focus is on the application. In this context, uncompromising, superior quality is our hallmark. Every new solution found invariably flows back into the **HARTING** technology pool, thereby enriching our resources. And every new solution we go on to create will draw on this wealth of resources in order to optimize each and every individual solution. **HARTING** is synergy in action.

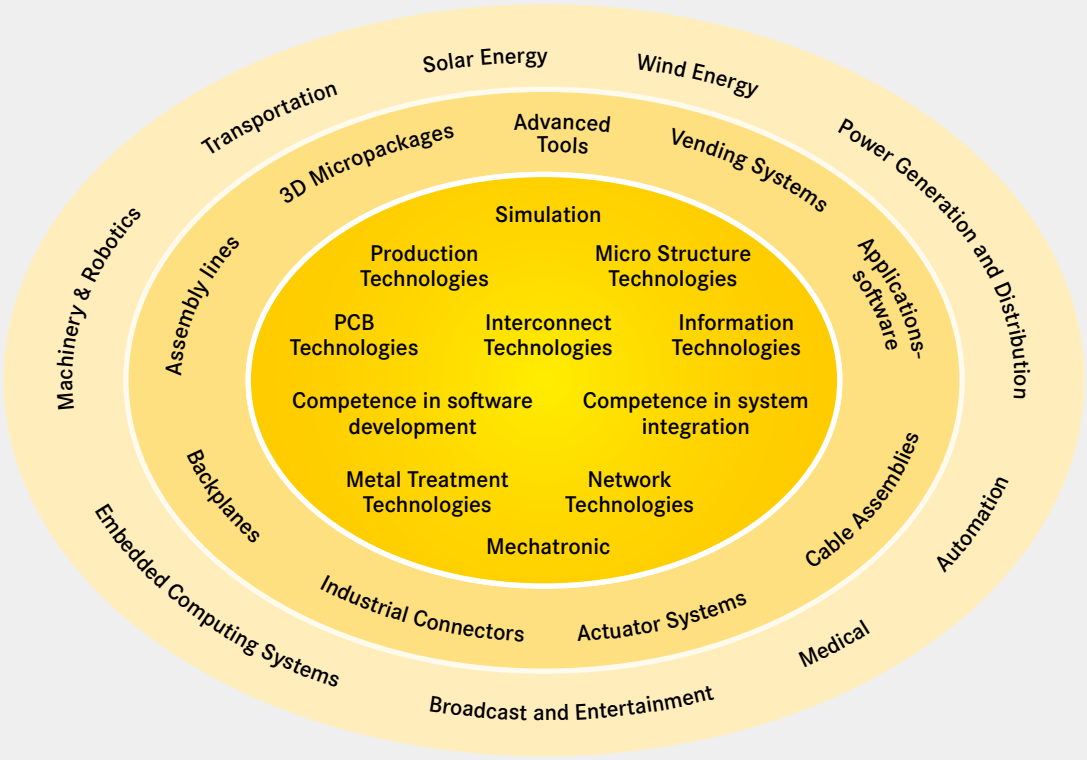

Smart Network Infrastructure

INTELLIGENT NETWORK SOLUTIONS

With its product series Ha-VIS, HARTING offers a consistent range of Ethernet network components and cabling products, which form the communication platform of convergent automation IT networks. Under Ha-VIS HARTING offers fully integrated RFID solutions.

Installation Technology

INDUSTRIAL CONNECTORS Han®

This catalogue documents the worldwide standard for industrial connectors. Han® connectors represent the preferential solution in the cable-to-cable interconnection of data, signal and power applications operating under the most demanding conditions and meeting stringent requirements with regard to safe and detachable electrical connections with high degree of protection IP65 / IP67. Installations making use of Han® connectors impress with their rugged design, convenient handling and modularity of data, signal and power connections. Han® connectors represent the worldwide standard in industry, railway technology, as well as in power generation and distribution.

Device Connectivity

DEVICE CONNECTIVITY

The Device Connectivity catalogue provides a universal, innovative product portfolio of PCB connections and of termination technology. The product range comprises board-to-board and cable-to-board connectors for industrial electronic devices with degree of protection IP20 to IP65 / IP67. These HARTING solutions offer appropriate device connectivity for a wide range of devices, ranging from sensors to industrial computers and their respective data, signal and power interfaces.

Contents

	Chapter
HARTING RJ Industrial® – RJ45 Ethernet Connectors	01
PushPull Connectors	02
Circular Connectors	03
Industrial Connectors Han®	04
Subminiature D Connectors	05
har-mik® Interface Connectors	06
har-link® Interface Connectors	07
SEK IDC Connectors	08
DIN 41612 Connectors	09
Mini Coax Connectors	10
har-bus® *HM* Connectors	11
TCA Connectors	12
Micro Card Edge Connectors	13
har-flex® Connectors	14
har-flexicon® Connectors	15
Tools	20
HIS – HARTING Integrated Solutions	30
Custom Device Connectivity	31
Technical Appendix	40
List of part numbers	50

CABLE- / WIRE-TO-BOARD

Whatever your applications may be, HARTING has the ideal solutions for your data, signal and power connectivity requirements with its matching cable-to-board and wire-to-board technologies with degree of protection IP20 to IP65 / IP67.

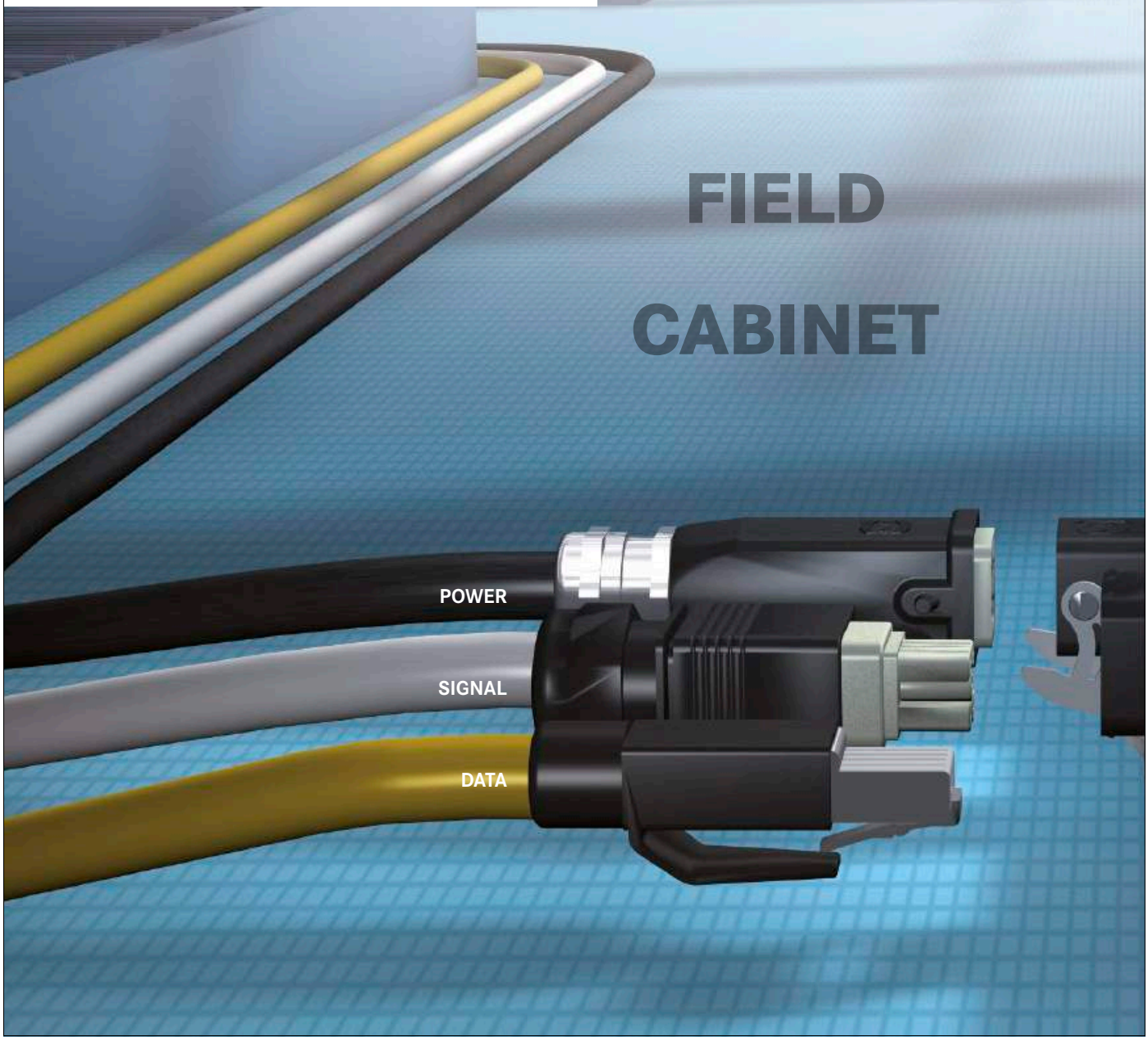

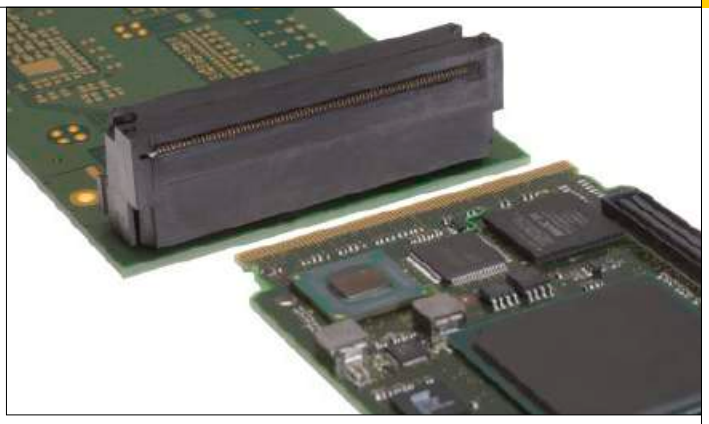

BOARD-TO-BOARD

Regardless of your device configuration, HARTING always has an ideal board-to-board connector with maximum packing density and optimal performance with regard to signal transmission and integrity.

DEVICE

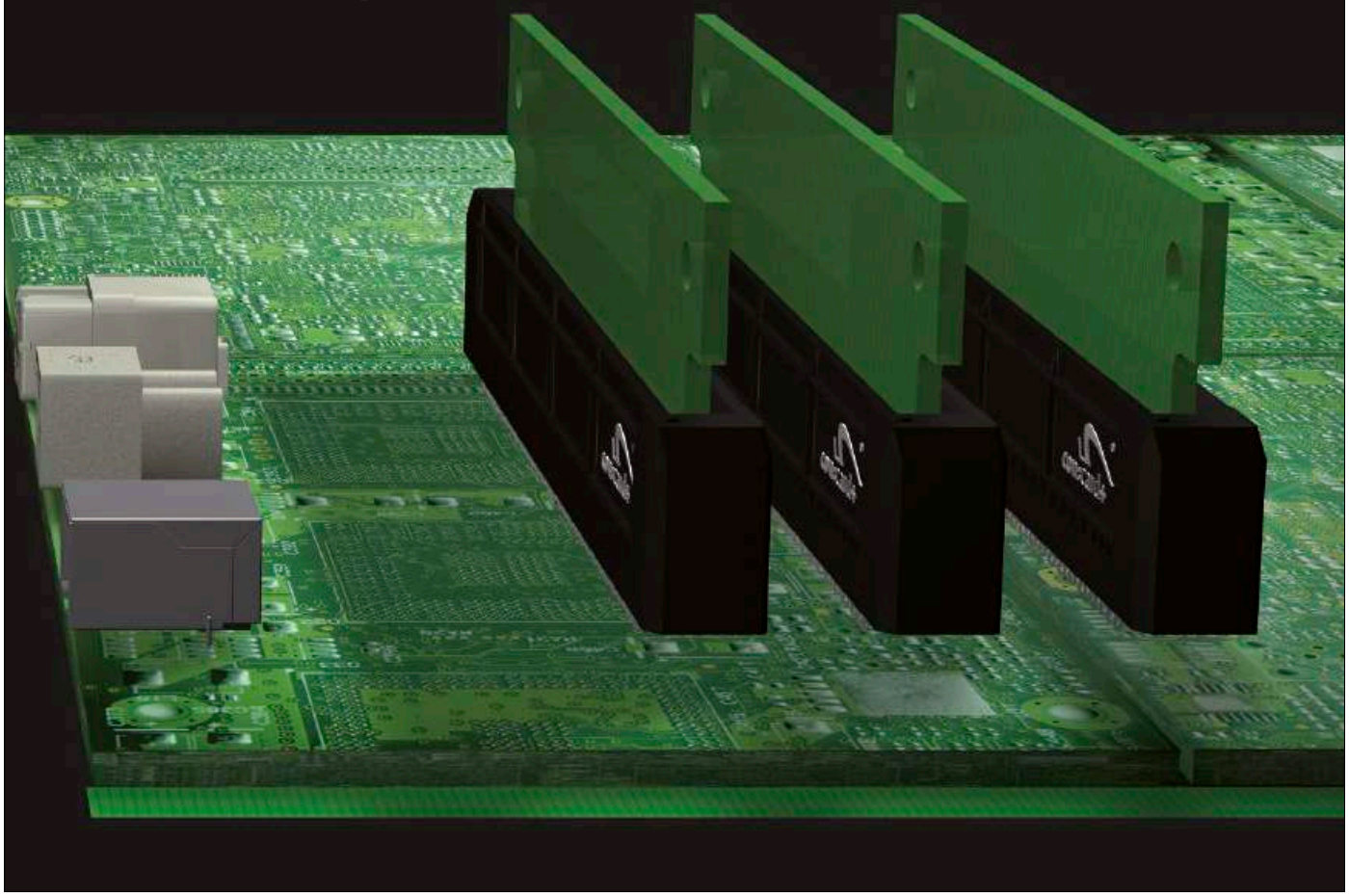

Device Connectivity product overview

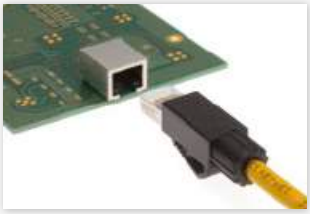

01. HARTING RJ INDUSTRIAL® – RJ45 ETHERNET CONNECTORS

HARTING offers a wide range of RJ45 contact inserts and matching RJ45 connectors for quick and reliable termination of your 2- or 4-pair Ethernet cables. The RJ Industrial connector family also supports Ethernet automation profiles such as PROFINET, Ethernet/IP, EtherCAT and Powerlink. The HARTING RJ Industrial® connectors provide standard RJ45 connection technology for the industrial field level.

02. PushPull CONNECTORS

HARTING has set the standard for connection technology for innovative IP65 / IP67 installation concepts with its new generation of the PushPull series. The multifunctional PushPull connector is available for data, signal and power applications and provides a concept with many connector mating faces. The universal PushPull product line is complemented by additional interfaces such as USB, LC or SCRJ.

03. CIRCULAR CONNECTORS

HARTING offers a comprehensive portfolio of M8, M12, M23, 7/8“ and Han-Max® circular connectors for industrial applications. In addition to assembled system cables, HARTING also offers connectors with *HARAX*® fast termination technology for onsite installation directly in the field.

04. INDUSTRIAL CONNECTORS Han®

Han® industrial connectors with degree of protection IP65 / IP67 represent the worldwide connector standard with regard to safe installation, efficient commissioning and servicing of machines and plants

Power

Signal

05. Subminiature D Connectors

D-Sub connectors are a classic solution for cable-to-board applications. Thanks to their versatility, they represent a universal solution for applications in the field of device connectivity, and offer a wide range of data, signal and power connection technology for applications in automation systems.

Data

06. *har-mik*® INTERFACE CONNECTORS

Miniature D connectors are used for applications where the focus is set on space saving solutions and high data rates. HARTING offers 14-pole to 100-pole *har-mik*® connector variants with pin & socket and bellows contact design and 1.27 mm contact grid, covering data rates up to 600 MHz.

07. *har-link*® INTERFACE CONNECTORS

The *har-link*® connector is characterized by its ability to handle the highest data rates in combination with perfect shielding functions. HARTING complements the *har-link*® connector family by assembled system cables with shielded and unshielded twisted-pair design.

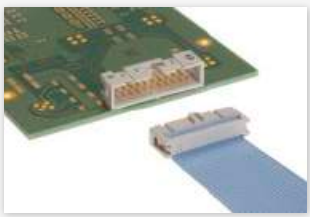

08. SEK INSULATION DISPLACEMENT CONNECTORS

IDC connectors for flat ribbon cables facilitate the simple and cost-effective configuration of devices and are preferably implemented as internal connections. HARTING offers a wide range of these cable-to-board connectors.

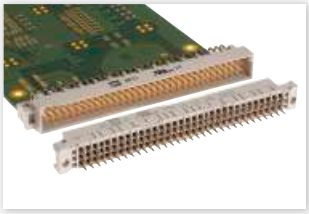

09. DIN 41 612 CONNECTORS

For many years, connectors to DIN 41 612 have established themselves as a standard both for board-to-board and cable-to-board applications. HARTING offers a wide product range of DIN 41 612 connectors for data, signal and power lines, including corresponding accessories.

10. Mini Coax CONNECTORS

Mini Coax connectors facilitate multi-channel, coaxial and highfrequency data transmission for board-to-board and cable-to-board applications. Device integration is supported with straight and angled contact inserts with press-in technology and SMT/ SMC. The housings support applications up to IP65.

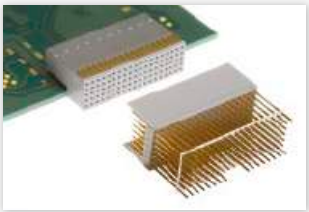

11. *har-bus® HM* CONNECTORS

har-bus® HM connectors form the basis for the assembly of high-performance backplanes for control systems and for industrial computer systems with 19“ technology. The board-to-board connectors are available with press-in technology for backplanes and solder versions for
sub-boards.

12. TCA CONNECTORS

TCA connectors represent the next generation of backplane connectors. Their new concept supports direct or indirect connection. TCA connector versions are available for connecting data channels and the power supply to the modules.

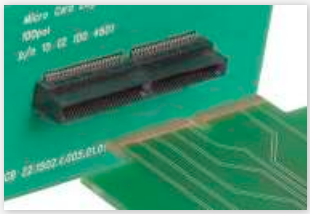

13. MICRO CARD EDGE CONNECTORS

The HARTING Micro Card Edge connector for applications requiring board-to-board mezzanine or small pluggable daughter card connections. The key feature is the very flexible stacking height of parallel boards by utilizing a small board between the connectors.

14. *har*-flex® CONNECTORS

HARTING’s new *har*-flex® connector series is a space-saving, rugged and flexible PCB connector for the widest range of board-to-board and board-to-cable applications. In addition to straight connector models, the product family also includes compatible insulation displacement connectors, along with angled models.

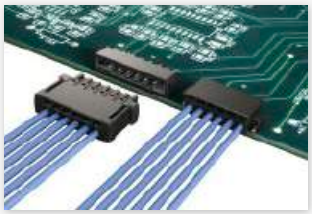

15. *har*-flexicon® PCB TERMINAL BLOCKS AND CONNECTORS

har-flexicon® is the robust PCB termination technology for single wires. Components for the termination of industrial devices in the pitches of 1.27 mm, 2.54 mm, 3.50/3.81 mm and 5.00/5.08 mm are available. All components are particularly suited for reflow-soldering on the PCB and offer field assembly with PushIn and insulation displacement termination for single wires.

PRODUCT GROUP	CONNECTION TYPE		ENVIRONMENT		
	Board to Board	Cable / Wire to Board	IP20	IP65 / IP67	Data
	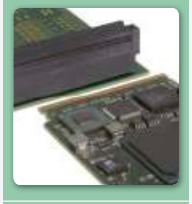				
01 HARTING RJ Industrial® – RJ45 Ethernet Connectors		●	●		●
02 PushPull Connectors		●		●	●
03 Circular Connectors		●		●	●
04 Industrial Connectors Han®		●		●	●
05 Subminiature D Connectors	●	●	●	●	●
06 *har-mik*® Interface Connectors		●	●		●
07 *har-link*® Interface Connectors		●	●		●
08 SEK IDC Connectors		●	●		●
09 DIN 41 612 Connectors	●	●	●		●
10 Mini Coax Connectors	●	●	●		●
11 *har-bus*® *HM* Connectors	●		●		●
12 TCA Connectors	●		●		●
13 Micro Card Edge Connectors	●		●		●
14 *har-flex*® Connectors	●	●	●		●
15 *har-flexicon*® Connectors and PCB terminal blocks		●	●		●

APPLICATION						APPLICATION STANDARD
Signal	Power	high performance				
		Data rate	Shielding	Number of poles/ contact density	Voltage/ current	
		*10 Gbit category 6_A				EtherCAT, EtherNet/IP, IEEE, POWERLINK
		*10 Gbit Cu & LWL				EtherCAT, IEEE, POWERLINK
						EtherCAT, DeviceNet, EtherNet/IP, CANopen, POWERLINK
		*10 Gbit Cu & LWL			*40 A @ 400 V	ECOFAST
				*max. 78 contacts	*40 A 4 kV	DeviceNet, CANopen
			*50 dB @ 2 GHz			SCSI
		*> 1.5 Gbit	*50 dB @ 1 GHz			
				*max. 64 contacts		
			*35 dB @ 2 GHz	*max. 160 contacts	*40 A 2.8 kV	VMEbus
		*4 GHz	*> 45 dB @ 4 GHz			VMEbus
				*max. 535 contacts		VMEbus, CompactPCI, AdvancedTCA
		*> 6 Gbit		*max. 170 contacts	*16 A	CompactPCI, AdvancedTCA
		* 14 Gbps		*max. 100 contacts		
				*max. 100 contacts		
				*max. 25 contacts	*600 V / 17.5 A	

We ensure convincing connectivity for each and every device you bring to the markets.

HARTING will develop the ideal connectivity for your devices in cooperation with your product management and device developers. For us, this means: Design-in support.

HARTING, THE SPECIALIST FOR INDUSTRIAL DEVICE CONNECTIVITY

The versatility of industrial electronic devices and the potential solutions for device connectivity go hand in hand.

HARTING supports industrial electronic systems with a wide standard portfolio of device connectivity for data, signal and power applications.

This portfolio facilitates the comfortable and quick implementation of the majority of connectivity solutions. Future device generations are frequently subject to specific requirements in terms of their interfaces. In order to implement Device Connectivity solutions that are tailored to these requirements, we utilize all expert resources of the HARTING Technology Group, drawing on our in-house development, tool production, extensive vertical range of manufacture and our accredited test laboratories. The connectivity of future industrial device generations is driven by market trends towards minimization of sizes, increase of performance and utilization of Ethernet communication with rapidly rising transmission rates. Consequently, as one of the leaders on the telecommunication connectivity market, HARTING integrates the knowledge acquired in this market segment to develop new Device Connectivity for industrial devices.

The MicroTCA telecommunications connector, for example, is implemented as a board-to-board connector for the latest devices in the field of drive control and computer technology. The new generation of PushPull connectors is also used as a robust IP67 cable-to-board solution in both market application segments. These applications have formed a general trend of convergence in the field of device connection technology. HARTING offers more than innovative device connectors, as the connectivity provided by HARTING extends far beyond conventional connector offerings, and covers the entire range of connectors, assembled units and complete backplane solutions.

HARTING IS YOUR PARTNER IN THE DESIGN-IN PROCESS

Our field service department is your first contact partner in terms of the selection and design of the ideal connectivity solution for your device. This service is supported by HARTING's technical application support with device-specific knowledge.

HARTING also places a team of experts in the fields of RF, EMC, housing technology, mechanical strength, high-current applications and installation concepts (cabling classes) at your disposal. These capabilities allow us to simulate your applications in advance and test it in the course of development in an accredited laboratory.

The HARTING Technology Group holds all the key technologies for integrated device connectivity, such as connection technology for PCBs based on SMD, THT, THR or press-fit technology and develops connectivity solutions for international standardization in cooperation with user groups.

The latest generation of PushPull connectors was developed in cooperation with the German automotive industry and subsequently standardized on an international level.

You determine which part of the design-In process should be handled by HARTING.

There are three ways of finding the ideal device connectivity with HARTING:

1. You select the suitable device connection technology from the DeviceCon catalog and handle the design-in by yourself with the help of our technical applications support.
2. You define the scope of requirements for the device interfaces. HARTING supports you in selecting the device connection technology, with the focus always set on choosing the ideal connection technology for device integration.
   HARTING also holds the respective know-how for handling the entire design and the production of custom assembled units or backplanes.
3. You plan a new device generation with individualized device connectivity, which is defined in the course of a joint project. The result is a tailored, cost-effective solution for your series product and the differentiation of such products thanks to innovative device connectivity.

Whichever procedure you may prefer, you can always count on unrestricted HARTING support, as we are dedicated to ensuring convincing connectivity for each and every device you bring to the markets.

The **HARTING eCatalogue / eShop** can be found on our homepage at **www.HARTING.com** or at the direct link **www.eCatalogue.HARTING.com**.

The HARTING e-Catalogue is your platform for conveniently selecting individual products as well as configuring complete solutions. Our comprehensive product pages provide you with all necessary technical information and CAD files in various formats for downloading. You may also contact our technical sales department directly.

Find out about **product innovations and news** on the start page of the HARTING e-Catalogue or go directly to **www.product-news.HARTING.com**.

Registered users can take advantage of MyHARTING to check on availability or prices, and to place or track their orders. Here, your customized „HARTING history“ provides you with a list of your inquiries, quotations and more.

Sign up now for your free e-Catalogue account at HARTING!

www.eShop.HARTING.com

Product samples: Fast-track delivery to your desk, free of charge

The new free express sample service in the HARTING eCatalogue allows customers to order samples immediately, easily and completely free of charge. A broad selection from the device connectivity product portfolio is now available. If a product is unavailable, the system offers alternative products with similar features that can be requested at a mouse click.

The free samples are shipped within 24 hours at no cost to you. This service enables tremendous flexibility, especially in the design phase of projects.

General information

It is the customer’s responsibility to check whether the components illustrated in this catalogue also comply with different regulations from those stated in special fields of applications.

We reserve the right to modify designs or substance of content in order to improve quality, keep pace with technological advancement or meet particular requirements in production.

No part of this catalogue may be reproduced in any form (print, photocopy, microfilm or any other process) or processed, duplicated or distributed by means of electronic systems without the prior written consent of HARTING Electronics GmbH, Espelkamp. We are bound by the German version only.

© HARTING Electronics GmbH, Espelkamp – All rights reserved, including those of the translation.

1. Han-Quick Lock® SPRING CLAMP TECHNOLOGY

The Quick Lock® radial spring clamp technology combines the benefits of a spring-loaded contact with crimp technology. The result is a simple and vibration-proof wiring technology with the crimp technology contact grid. Quick Lock® technology is suited for wiring flexible conductors. The stranded wires are split up by means of a center mandrel and are then pressed onto this mandrel by means of radial spring force. The spring is opened and activated using a standard screwdriver, which ensures convenient on-site termination, repair or service work.

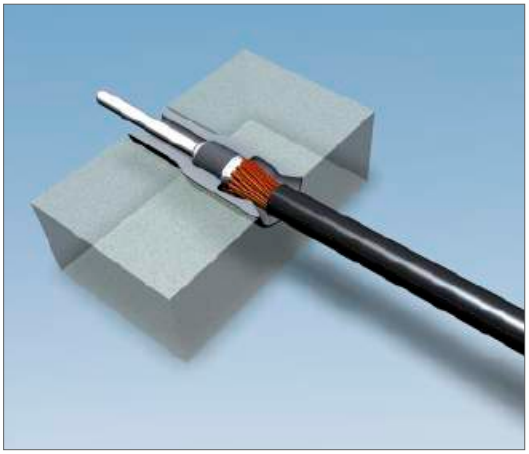

2. AXIAL SCREW TERMINALS

Flexible stranded wires inserted into axial screw terminals are split up by a center mandrel and are then pressed onto the outer wall of the contact by screwing down the mandrel. This vibration-proof connection technology is also a convenient solution for repair work and is capable of handling conductor cross-sections to 100 mm^2. The axial screw terminal is an ideal alternative to applications that required special crimp tools for wiring large conductor cross-sections.

3. CAGE CLAMP TERMINALS

The cage clamp terminal technology is used to terminate flexible and solid conductors by means of spring force. After the spring has been opened by an actuator element, the stripped conductor is simply inserted into the contact chamber. This connection technology requires minimum operating expense and is characterized by its high functional safety. The spring-loaded connection also allows thetermination of more than one wire per contact and excels with high vibration and shock resistance.

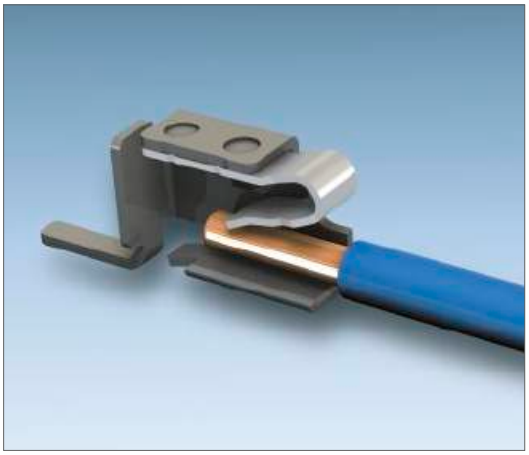

4. PUSH-IN SPRING CONNECTION

Push-in spring connector technology connects flexible and solid conductors by means of a spring. In a time-saving manner rigid conductors and flexible prefabricated conductors with wire-end ferrules can be connected directly, without the need for tools. Push-in spring connector technology ensures low insertion force and high conductor withdrawal force, and multiple connections are possible. When it comes to flexible conductor connection, before plugging in the terminal point should be opened via the activation element or with a suitable screw-driver.

5. SCREW TERMINALS

The screw terminal represents classic connection technology, with screws retaining the stripped conductors in the contact chambers. Screw technology is suited for wiring solid and flexible conductors. Screw terminals with wire protection allows the insertion of stranded wire into the contact chamber without a ferrule. Handling screw terminal technology requires nothing more than a screwdriver. The pull out forces of screw terminal technology are standardized in IEC 60 999-1.

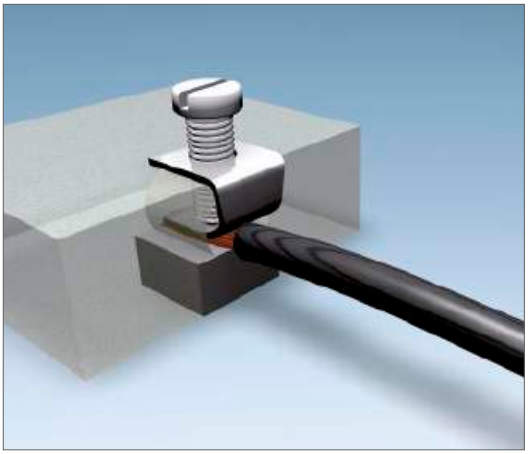

6. IDC INSULATION DISPLACEMENT TERMINALS

IDC (insulation displacement contact) technology facilitates the simple and safe termination of solid and flexible conductors. With IDC technology, a blade cuts through the wire insulation and produces an elastic termination in a single pass. This gas-proof connection provides maximum safety even for the lowest currents and voltages. *HARAX*® Fast termination technology is a special feature offered by HARTING which combines the insulation displacement connector with a wire guide element for conveniently producing on-site field installation without special tools. Technical requirements for IDC technology are standardized in IEC 60 352-3.

7. CRIMP TERMINALS

Gas-proof and the miniaturized contact technology are synonymous with crimp technology. The flexible conductor is inserted into the crimp contact and is retained by controlled deformation. This technology is similar to a cold welding process and provides maximum aging resistance and mechanical resistance to shock and vibration. Crimp machines facilitate the efficient, streamlined production of system cable assemblies, and crimp technology can also be deployed for field assemblies using the corresponding hand crimp tools. The technical requirements for crimp technology are standardized in IEC 60 352-2.

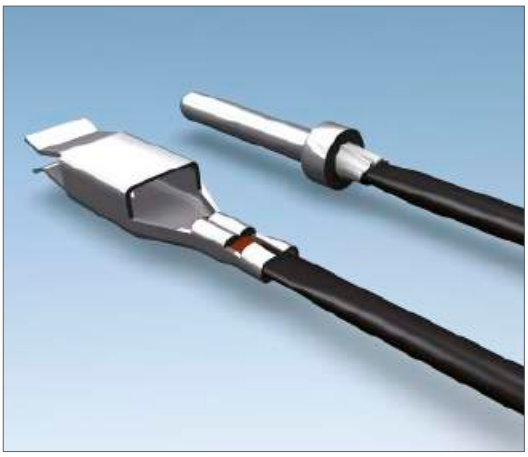

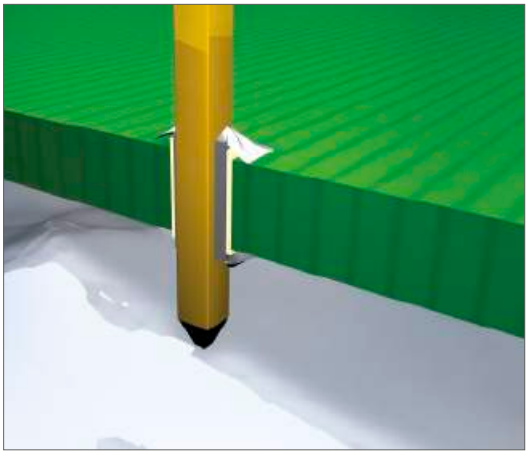

8. THT SOLDERING TECHNOLOGY

Proven over decades, standard soldering technologies deliver maximum stability and process reliability.

The soldering pins of the connectors are inserted into the through-plated PCB holes and can then be soldered simultaneously with other components in a wave soldering process.

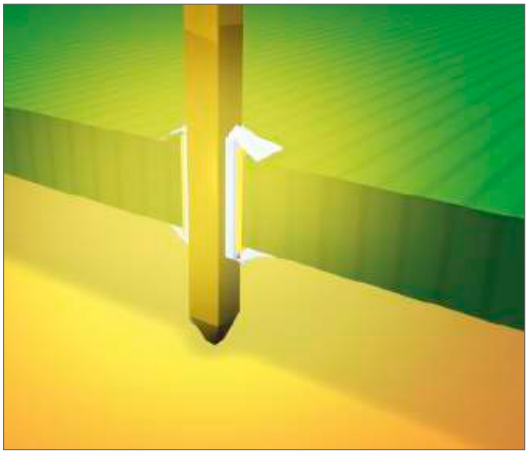

9. SMC SOLDERING TECHNOLOGY

The connector is inserted into through-plated PCB holes similar to standard component assembly for processing with SMC (Surface Mount Compatible) soldering technology. Insertion of these SMT components can be automated by means of Pick & Place assembly in preparation for a reflow soldering process together with the surface-mounted component.

This connection technology is characterized by high mechanical strength and is facilitated by a design that is specially adapted to the reflow soldering process (high-temperature materials).

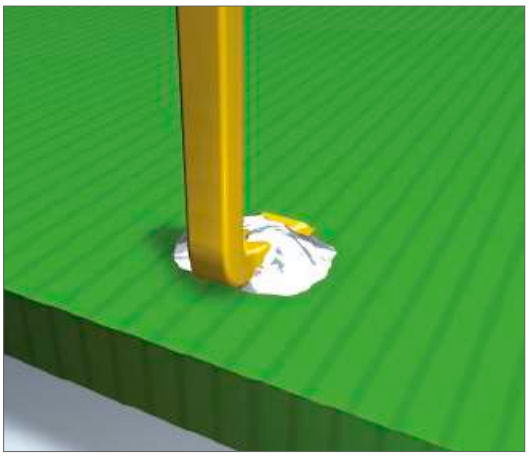

10. SMT SOLDERING TECHNOLOGY

By contrast to through-plated assembly, the SMT (Surface Mounted Technology) connectors are soldered directly onto the PCB surface by means of soldering pads. This process represents a uniform connection technology for PCB assembly and offers the advantage of SMT connectors that do not require separate wave soldering.

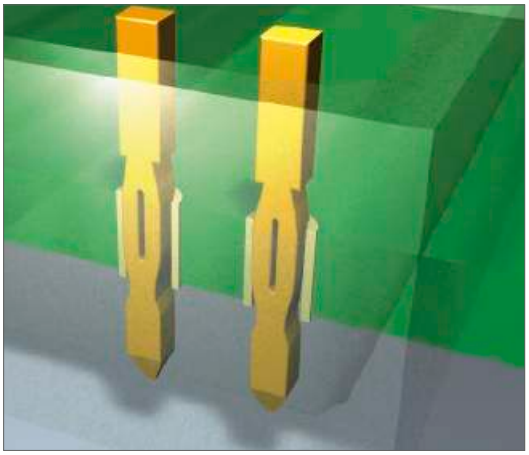

11. PRESS-IN TECHNOLOGY

This solder-free connection technology is based on press-in mounting of a pin in a through-plated PCB hole. The implementation of a state-of-the-art, flexible press-fit zone allows for the compensation of tolerances of PCB holes and meets high electrical and mechanical requirements for properties such as low press-in forces and high holding forces.

Press-in technology supports unlimited cost efficient processing, especially of pins with selective gold plating for backplane bus systems.

Notes

01. HARTING RJ Industrial® – RJ45 Ethernet Connectors

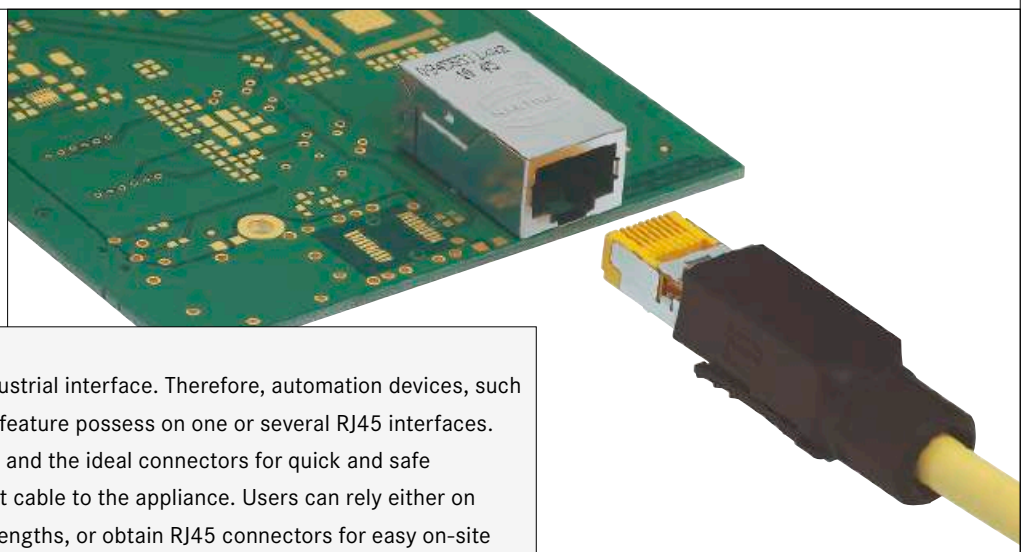

Ethernet is coming up to standard industrial interface. Therefore, automation devices, such as controllers, sensors and actuators feature possess on one or several RJ45 interfaces. HARTING offers the matching sockets and the ideal connectors for quick and safe connection of the 2- or 4-pair Ethernet cable to the appliance. Users can rely either on ready-to-use patch cables in various lengths, or obtain RJ45 connectors for easy on-site dressing of the cables without using special tools.

HARTING relies on the *HARAX*® quick connection technology for on-site preparation of cables, meeting all industrial requirements made on safe and durable contacting.

The HARTING RJ Industrial® connector family also supports Ethernet automation profiles such as PROFINET, Ethernet/IP, POWERLINK and EtherCAT for the integration of RJ45 connection technology at field levels.

Application profile:

CONNECTION TYPE		ENVIRONMENT		APPLICATION						
Board to Board	Cable/ Wire to Board	IP20	IP65 / IP67	Data	Signal	Power	high performance			
							Data transfer rate	Shielding	Number of contacts, contact density	Voltage, working current
	●	●		●			●	●		

Cable termination

Han-Quick Lock®	*IDC HARAX*®	*Crimp*
	●	● [1]
Screw	*Cage clamp*	*Axial screw*

PCB termination

THT	*SMC*	*SMT*
●	●	●

Press-in

Application standard

PROFINET, EtherNet/IP, IEEE 802.3, ISO IEC 24702, ETHERNET POWERLINK, EtherCAT Technology Group

Housing integration

Separate housing	*integrated housing*

[1] Piercing contacts

01. HARTING RJ Industrial® – RJ45 Ethernet Connectors

Contents

	Page
Introduction HARTING RJ Industrial®	**01.02**
HARTING RJ Industrial® RJ45 – Jacks for device integration and accessories	**01.04**
HARTING RJ Industrial® RJ45 – Coupler and adapter pcb's	**01.09**
HARTING RJ Industrial® RJ45 – Connectors, 4-poles	**01.14**
HARTING RJ Industrial® RJ45 Gigalink – Connectors, 8-poles	**01.18**
HARTING RJ Industrial® 10G	**01.19**
HARTING RJ Industrial® – Tools	**01.20**
HARTING RJ Industrial® – System cables	**01.21**
Ha-VIS preLink®	**01.23**
har-port – Coupler	**01.36**

01. HARTING RJ Industrial® – RJ45 Ethernet Connectors

The modular HARTING RJ Industrial® connector family is based on the standard RJ45 pin profile and was developed especially for use in rugged industrial environments.
This technology charts a new course in the wiring of appliances with Ethernet interfaces, enabling the on-site configuration of connectors for many industrial applications, no matter if the product is a power connector or a communications connector.
For the fast wiring of all Ethernet networks, HARTING relies consistently on the *HARAX*® IDC connection technology which has proved its worth in many industrial applications.
Solid or flexible conductors up to a cross-section of AWG 22 are terminated by IDC technology, without stripping or using any special tool.
For all Gigabit Ethernet networks HARTING offers the 8-pole data module with piercing connection technology and the new 8-pole data module with *HARAX*® quick termination technology.
All data modules have the same dimensions.

The replacement of the data module enables the conversion of any 100 MBit Fast Ethernet network into a Gigabit Ethernet network using HARTING RJ Industrial® connectors. This innovative platform strategy also permits the use of the RJ45 data module in combination with the PushPull, Han-Max® and Han® 3 A connector families.
Based on this data module, HARTING has developed a comprehensive connector family which covers all applications for Fast Ethernet, 1/10 Gigabit Ethernet, PROFINET, Ethernet/IP and other Ethernet profiles in the industrial environment.
Degree of protection IP20 is available for the standard RJ45 connectors, either for configuration in the field, or as molded system patch cable.

APPLIANCE INTEGRATION:

HARTING offers various RJ45 jacks for direct mounting on the PCBs of appliances.

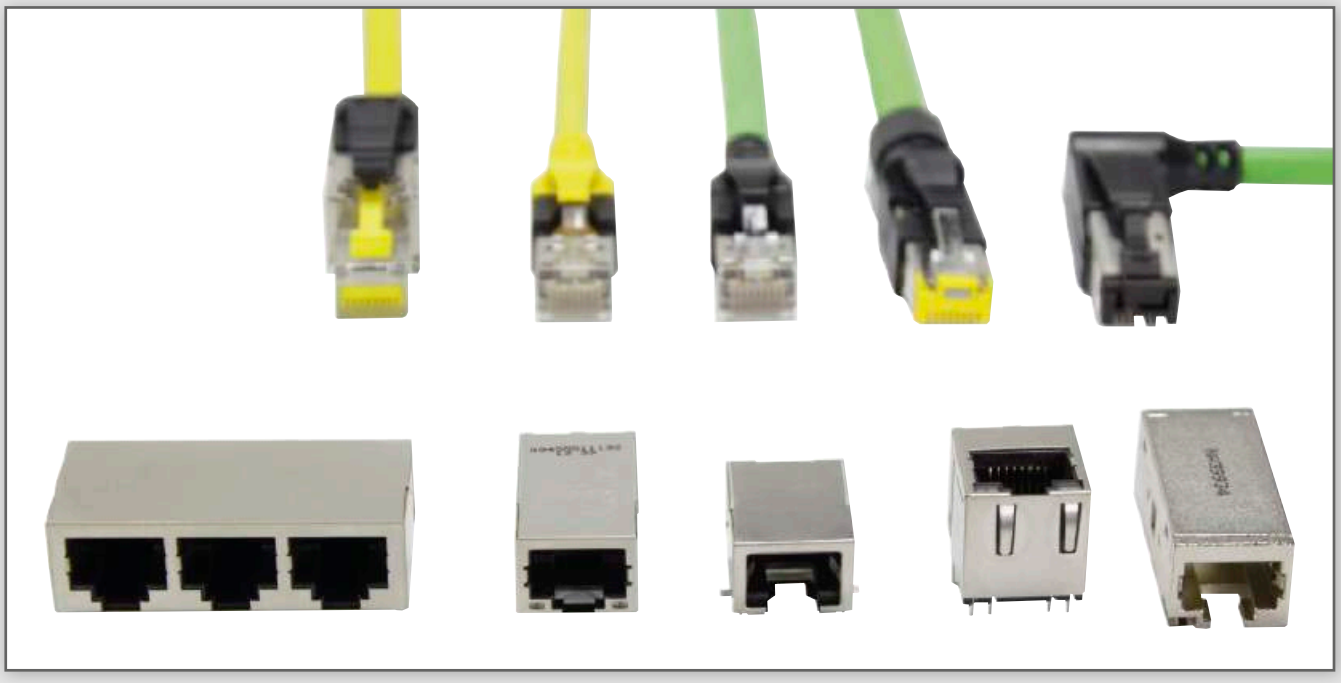

Special series features

RJ45 QUICK CONNECTION WITH *HARAX*®:

The HARTING *HARAX*® quick connection technology is the ideal solution for dressing RJ45 connectors on-site. In order to produce a gas-proof and vibration resistant Ethernet connection, users only have to strip the cable insulation, insert the conductors, terminate the shielding plates and close the connector.
HARAX® is the most convenient handling standard connection for Ethernet where the emphasis is set on the assembly of connectors in the field.
HARAX® is an ideal IDC connection technology which is deployed universally in a very wide range of data, signal and power series.

ASSEMBLED SYSTEM CABLES:

HARTING offers a comprehensive range of ready-to-use RJ45 system cables for the simple and easy connection of Ethernet devices. HARTING also provides assembled and tested system cables for special Ethernet profiles such as PROFINET and Ethernet/IP.
The range of solution comprises star quad, double-pair and four-pair cables of diverse structure, as required in drag chain applications, for example.
Consequently, HARTING system cables can be deployed in all Ethernet applications and all ambient conditions.

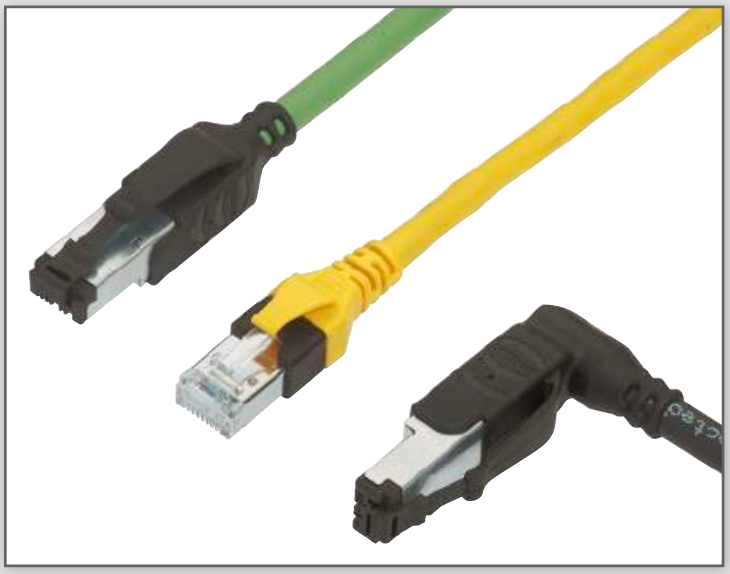

PERFORMANCE FOR THE FUTURE:

The HARTING RJ Industrial® portfolio offers a wide range of solutions for Industrial Ethernet, independent of wiring strategies to ISO/IEC 11 801 currently deployed to wire appliances.
HARTING RJ Industrial® provides field connection technology based on 2-pair category 5 variant and on 4-pair category 6 variant.
HARTING RJ Industrial® is ideal for the future-proof planning of appliance interfaces, regardless of whether your future applications will involve Fast or Gigabit Ethernet, or 10 Gigabit Ethernet.

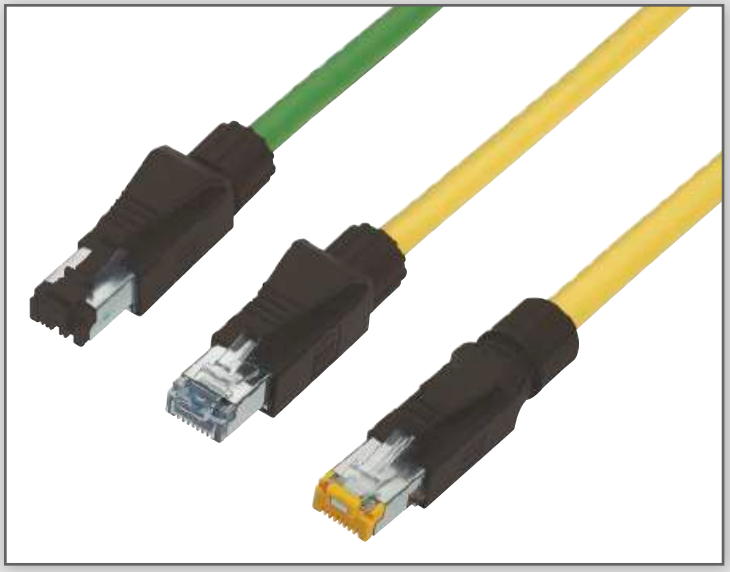

HARTING RJ Industrial® RJ45 jacks for direct device integration

Advantages

- Compact design
- Category of transmission Cat. 5
- Suitable for PoE (IEEE 802.3af) and PoE+ (IEEE 802.3at)
- Temperature range -40 °C … +70 °C

Technical characteristics

Locking	RJ45 acc. to IEC 60603-7
Number of contacts	8
Degree of protection	IP20
Rated voltage	125 V AC
Rated current	1.5 A
Mating face	RJ45 acc. to IEC 60603-7
Mating cycles	min. 750
	UL approval

Identification	Part number	Drawing	Dimensions in mm
Components device side			PCB layout, component side
RJ45 jack (low profile)			
Solder variant SMD, 90° angled	09 45 551 1100[1] 09 45 551 1110[2]	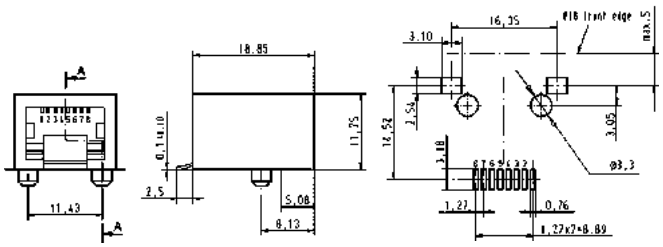	
Solder variant THT, 90° angled with EMC contacts	09 45 551 1101[1]	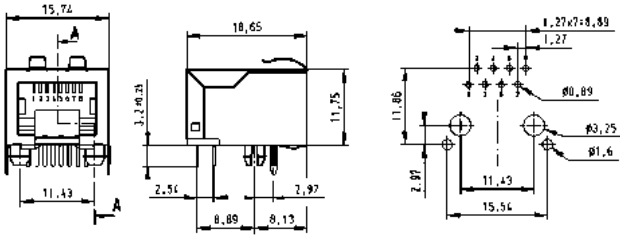	
Solder variant THT, 90° angled	09 45 551 1102[1]	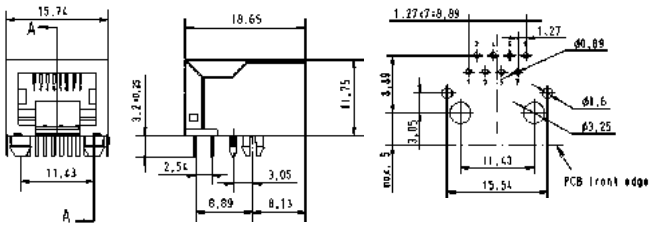	
Solder variant THT, vertical	09 45 551 1103[3]	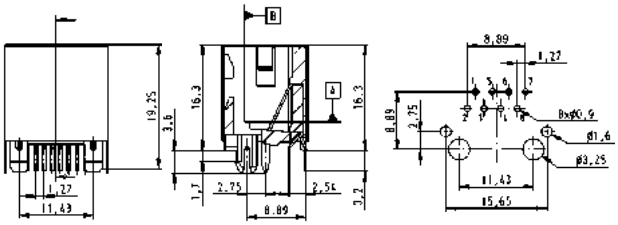	

[1] Packaging: Blister à 120 pieces
[2] Packaging: Tape & Reel à 130 pieces
[2] Packaging: Blister à 80 pieces

HARTING RJ Industrial®

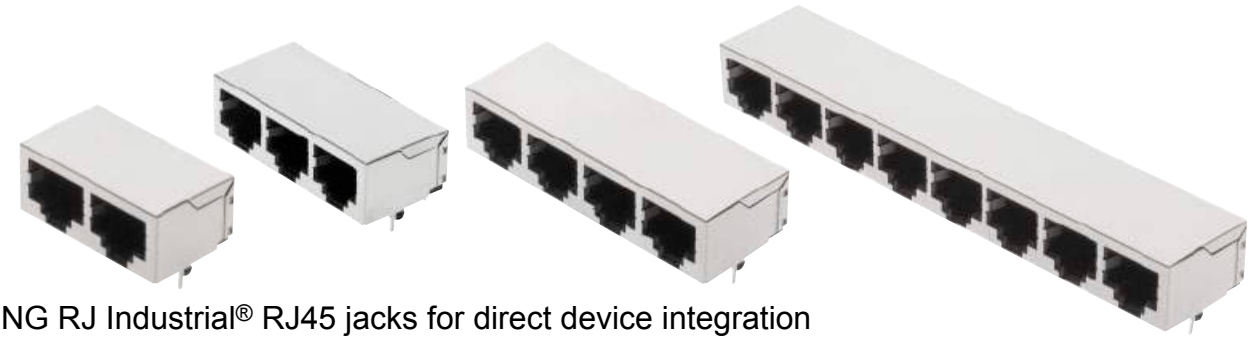

HARTING RJ Industrial® RJ45 jacks for direct device integration

Advantages

- Compact design
- Category of transmission Cat. 5
- Suitable for PoE (IEEE 802.3af) and PoE+ (IEEE 802.3at)
- Temperature range -40 °C … +70 °C
- SMC compatible

Technical characteristics

Locking	RJ45 acc. to IEC 60603-7
Number of contacts	8
Degree of protection	IP20
Rated voltage	125 V AC
Rated current	1.5 A
Mating face	RJ45 acc. to IEC 60603-7
Mating cycles	min. 750
	UL approval

Identification	Part number	Drawing	Dimensions in mm
Components device side			
RJ45 jack			
2 ports, 90° angled, THT	09 45 551 1122		
3 ports, 90° angled, THT	09 45 551 1123		
4 ports, 90° angled, THT	09 45 551 1124		
6 ports, 90° angled, THT	09 45 551 1126		
8 ports, 90° angled, THT	09 45 551 1128		

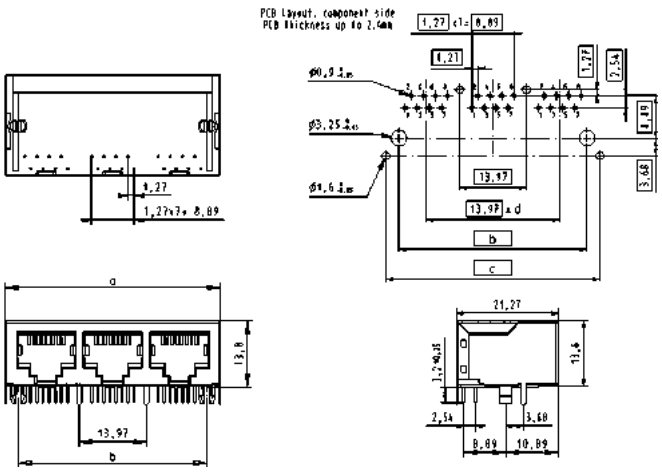

	a	b	c	d
2 ports	31.12	25.40	30.87	1
3 ports	45.09	39.37	44.84	2
4 ports	59.06	53.34	58.81	3
6 ports	87.00	81.28	86.75	5
8 ports	114.94	109.22	114.69	7

HARTING RJ Industrial® RJ45 jacks for direct device integration

Advantages

- Compact design
- Category of transmission Cat. 6
- Suitable for PoE (IEEE 802.3af) and PoE+ (IEEE 802.3at)
- Temperature range -40 °C … +70 °C

Technical characteristics

Locking	RJ45 acc. to IEC 60603-7
Number of contacts	8
Degree of protection	IP20
Rated voltage	125 V AC
Rated current	1.5 A
Mating face	RJ45 acc. to IEC 60603-7
Mating cycles	min. 750
	UL approval

Identification	Part number	Drawing	Dimensions in mm
Components device side			PCB layout, component side
RJ45 jack (Standard)			
Solder variant overmolded (THT), 90° angled	09 35 002 2101[1]	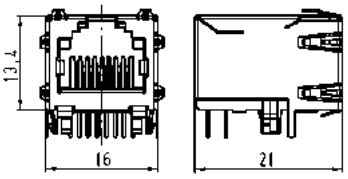	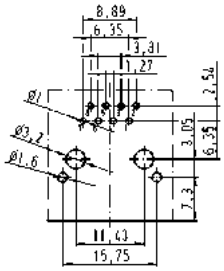
Solder variant overmolded (THT), 180° straight	09 35 002 2102[2]	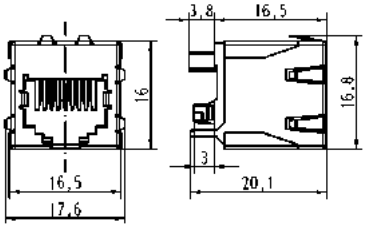	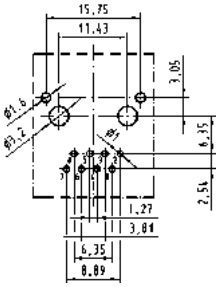

[1] Packaging: Blister à 90 pieces
[2] Packaging: Blister à 100 pieces

HARTING RJ Industrial® RJ45 jacks for direct device integration

Advantages

- Compact design
- Excellent EMC behaviour due to integrated transformers and filters for 10/100 Mbit or 1 Gbit Ethernet
- Versions from 10/100 Mbit up to 10 Gbit Ethernet resp. Cat. 5

Technical characteristics

Mating face	RJ45 acc. to IEC 60603-7
Number of contacts	8
Degree of protection	IP20
Mating cycles	min. 750
Temperature range	-40 °C … +85 °C

Identification	Part number	Drawing	Dimensions in mm
Components device side			
RJ45 jack Cat. 5			
with bicolour LED	09 45 551 1119		
without LED	09 45 551 1120		
RJ45 jack with transformer			
10/100 Mbit with bicolour LED	09 45 551 1140		
10/100 Mbit with LED green/yellow	09 45 551 1142		
1 Gbit with bicolour LED	09 45 551 1141		
1 Gbit with LED green/yellow	09 45 551 1143		

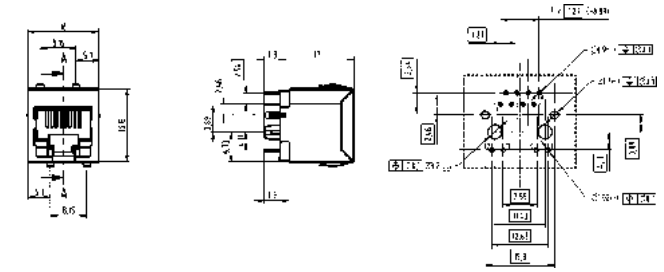

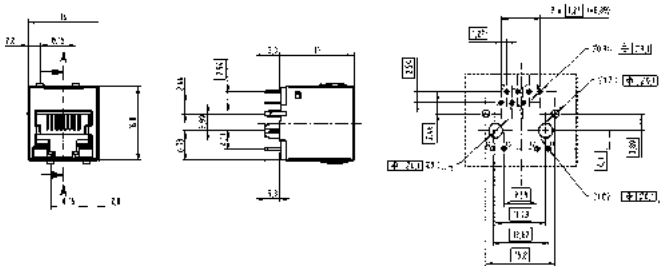

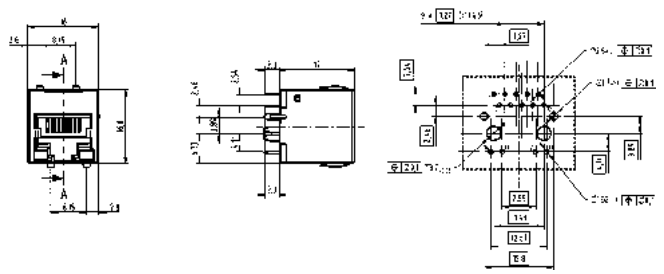

HARTING RJ Industrial® RJ45 jacks with transformer

Advantages

- Compact design
- Integrated optical fibres
- Excellent EMC behaviour due to integrated transformers and filters for 10/100 Mbit or 1 Gbit Ethernet
- SMC compatible
- Versions from 10/100 Mbit up to 10 Gbit Ethernet and PoE
- Usable for IP65 / IP67 device integration with HARTING PushPull and Han® 3 A RJ45

Technical characteristics

Mating face	RJ45 acc. to IEC 60603-7
Number of contacts	8
Degree of protection	IP20
Rated voltage	30 V DC
Rated current	8 mA DC
Mating cycles	min. 750
Temperature range	-25 °C … +70 °C

Identification	Part number	Drawing	Dimensions in mm
Components device side			
RJ45 jack with transformer (low profile)			
90° angled, THT 10/100 Mbit Ethernet Schematic: 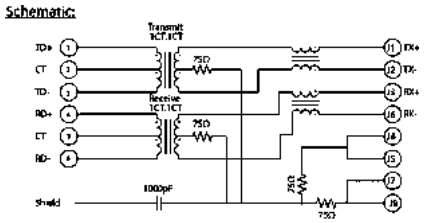	09 45 551 1130[1)]	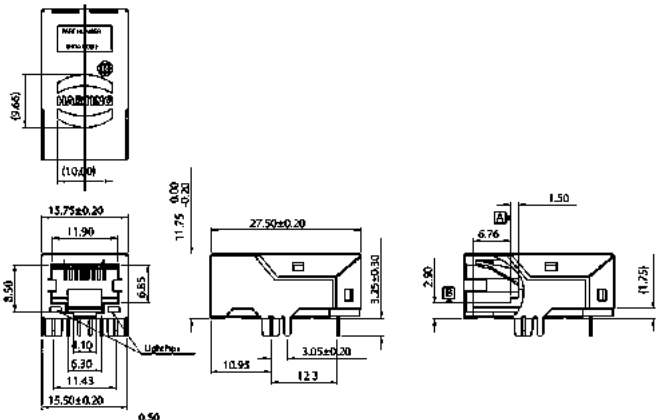	
10/100 Mbit Ethernet and PoE	09 45 551 1131[1)]	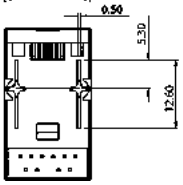	
90° angled, THT 1 Gbit Ethernet Schematic: 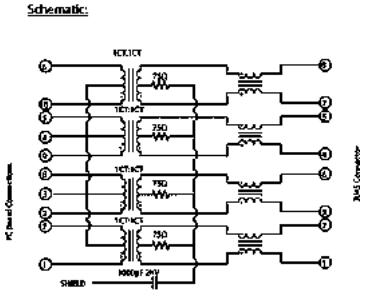	09 45 551 1530[1)]		
1 Gbit Ethernet and PoE	09 45 551 1531[1)]	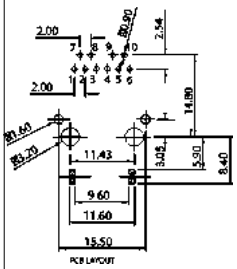	
90° angled, THT 10 Gbit Ethernet	09 45 551 1560[1)]		
		Customer specific versions on request	

[1)] Packaging: Blister à 56 pieces

HARTING RJ Industrial® RJ45 – coupler and adapter PCB's

Advantages

- Compatible with Han® 3 A[1)] and HARTING PushPull
- Suitable for PoE (IEEE 802.3af) and PoE+ (IEEE 802.3at)
- Temperature range -40 °C … +70 °C

Technical characteristics

Rated voltage	125 V AC
Rated current	1.5 A
Mating face	RJ45 acc. to IEC 60603-7
Mating cycles	min. 750

Identification	Part number	Drawing	Dimensions in mm
Coupler PCB 2x RJ45 8-poles		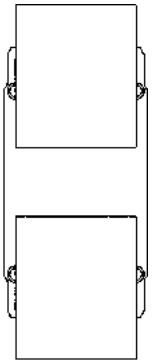 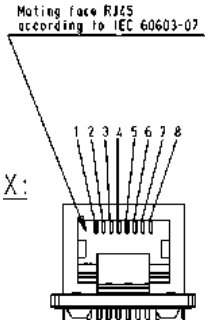	
2 x RJ45 jack (09 45 551 1102)	09 45 545 1130		
1 x RJ45 jack horizontal (09 45 551 1102) and 1 x RJ45 jack vertical (09 45 551 1103)	09 45 545 1138		
Adapter PCB 1x RJ45 8-poles		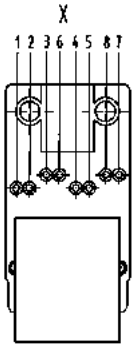 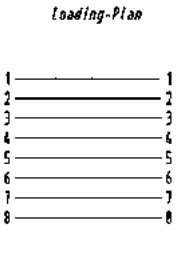 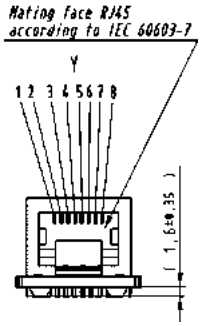	
to solder points	09 45 545 1134		
Adapter PCB 1x RJ45 8-poles		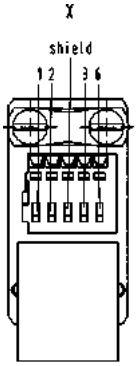 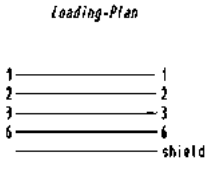 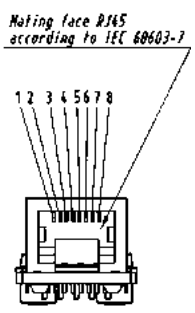	
cage clamp, 5-pole, 1.5 mm²	09 45 545 1135		

[1)] with suitable adapter, see page 04.04

HARTING RJ Industrial® 10G

HARTING RJ Industrial® 10G RJ45 bulkhead

Advantages

- Compact and robust design
- 360° shielding
- Compatible with HIFF dimensions for use in:
  – Han® 3 A series
  – HARTING PushPull (V4)
  – Han® PushPull (V14)
  – *har*-port
  Details see page 01.11
- Suitable for PoE (IEEE 802.3af) and PoE+ (IEEE 802.3at)

Technical characteristics

Mating face	RJ45 acc. to IEC 60603-7
Number of contacts	8
Transmission category	Cat. 6, performance class E_A, suitable for 1/10 Gigabit Ethernet
Degree of protection	IP20
Mating cycles	min. 750
Temperature range	–40 °C ... +70 °C
Housing material	Zinc die-cast, nickel-plated
Flammability acc. to UL 94	V0

Identification	Part number	Drawing	Dimensions in mm
HARTING RJ Industrial® 10G RJ45 bulkhead (HIFF version)	09 45 545 1560	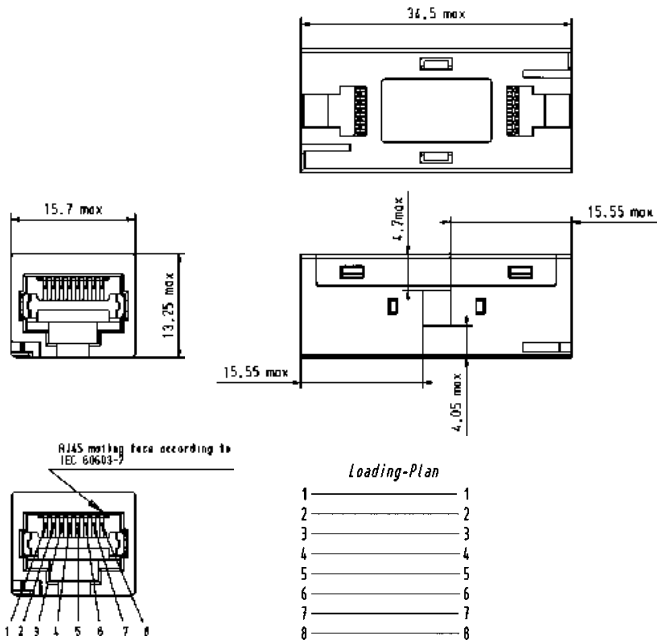	
HARTING RJ Industrial® 10G RJ45 bulkhead (keystone version)	09 45 545 1568	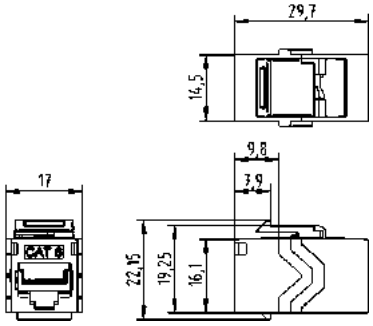	

HARTING RJ Industrial® 10G

HARTING RJ Industrial® cable jack
(HIFF version)

Advantages

- Compact and robust design
- 360° shielding
- Category of transmission Cat. 6
- Suitable for solid and stranded wires
- Field-assembly with *HARAX*® quick termination in IDC technology
- Compatible with HIFF dimensions for use in:
  - Han® 3 A series with HIFF adapter 09 45 515 0024
  - HARTING PushPull (V4)
    - Compact bulkhead mounting housing 09 45 545 0028
    - EasyInstall bulkhead mounting housing 09 45 545 0032
  - Han® PushPull (V14)
    - Panel feed-through plastic 09 35 012 0331
    - Panel feed-through metal rectangular 09 35 012 0311
    - Panel feed-through metal circular 09 35 012 0312
  - *har*-port 09 45 452 0000
- Suitable for PoE (IEEE 802.3af) and PoE+ (IEEE 802.3at)

Technical characteristics

Connector type	RJ45 connector acc. to IEC 60603-7
Number of contacts	8
Transmission category	Category 6, class E_A, suitable for 1/10 Gigabit Ethernet
Transmission performance	Category 6 / Class E_A up to 500 MHz acc. to ISO/IEC 11801:2002, EN 50173-1
Transmission rate	10/100 Mbit/s and 1/10 Gbit/s
Shielding	fully shielded, 360° shielding contact
Mounting	Field-assembly
Cable termination	with IDC-contacts, without tools
Connectable cables	
- Conductor cross section	AWG 27 … AWG 24 (solid/stranded)[1] AWG 24 … AWG 22 (solid/stranded)[2]
- Conductor diameter	max. 1.6 mm (incl. insulation)
- Cable diameter	5 ... 9 mm
Mating cycles	min. 750
Degree of protection	IP20
Temperature range	-40 °C … +70 °C
Housing material	Zinc die-cast, nickel-plated

Identification	Part number
HARTING RJ Industrial® 10G cable jack, 8-poles	
AWG 28 … 24	09 45 545 1561
AWG 24 … 22	09 45 545 1562
HARTING RJ Industrial® PN cable jack, 4-poles, Cat. 5	
AWG 24 … 22	09 45 545 1120
Unlocking tool for opening of the HARTING RJ Industrial® cable jacks	20 82 000 9916

Drawing — Dimensions in mm

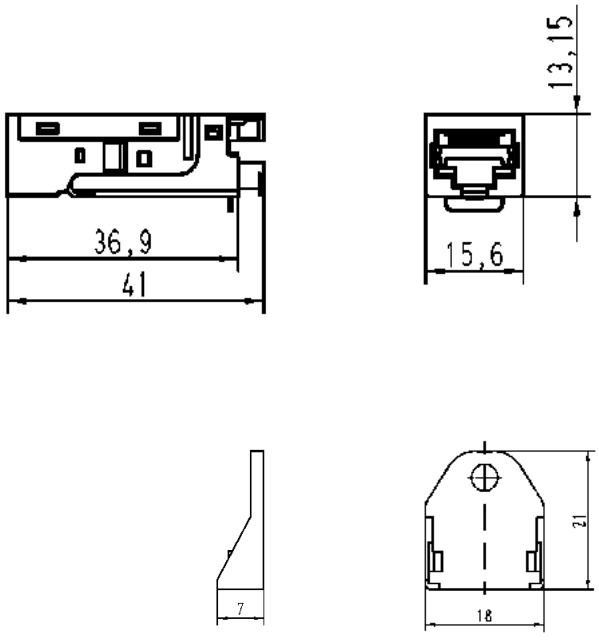

[1] For part number 09 45 545 1561
[2] For part number 09 45 545 1562 and 09 45 545 1120

HARTING RJ Industrial® 10G

HARTING RJ Industrial® cable jack
(keystone version)

Advantages

- Compact and robust design
- 360° shielding
- Category of transmission Cat. 6_A
- Suitable for solid and stranded wires
- Field-assembly with *HARAX*® quick termination in IDC technology
- Keystone form factor – usable for DIN-rail outlet 09 45 851 0000 and a wide range of typical patch panels and wall outlets
- Suitable for PoE (IEEE 802.3af) and PoE+ (IEEE 802.3at)

Technical characteristics

Connector type	RJ45 connector acc. to IEC 60 603-7
Number of contacts	8
Transmission category	Category 6_A, class E_A, suitable for 1/10 Gigabit Ethernet
Transmission performance	Category 6_A / Class E_A up to 500 MHz acc. to ISO/IEC 11 801:2002, EN 50 173-1
Transmission rate	10/100 Mbit/s and 1/10 Gbit/s
Shielding	fully shielded, 360° shielding contact
Mounting	Field-assembly
Cable termination	with IDC-contacts, without tools
Connectable cables	
- Conductor cross section	AWG 27 … AWG 24 (solid/stranded)[1)] AWG 24 … AWG 22 (solid/stranded)[2)]
- Conductor diameter	max. 1.6 mm (incl. insulation)[1)] max. 1.2 mm (incl. insulation)[2)]
- Cable diameter	5 ... 9 mm
Mating cycles	min. 750
Degree of protection	IP 20
Temperature range	-40 °C … +70 °C
Housing material	Zinc die-cast, nickel-plated

Identification	Part number	Drawing	Dimensions in mm
HARTING RJ Industrial® 10G cable jack, 8-poles			
AWG 28 … 24	09 45 545 1563		
AWG 24 … 22	09 45 545 1564		
HARTING RJ Industrial® PN cable jack, 4-poles, Cat. 5			
AWG 24 … 22	09 45 545 1122		
Unlocking tool for opening of the HARTING RJ Industrial® cable jacks	20 82 000 9916		

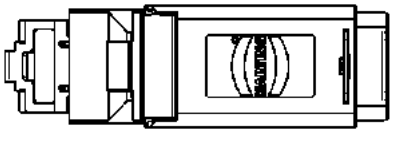

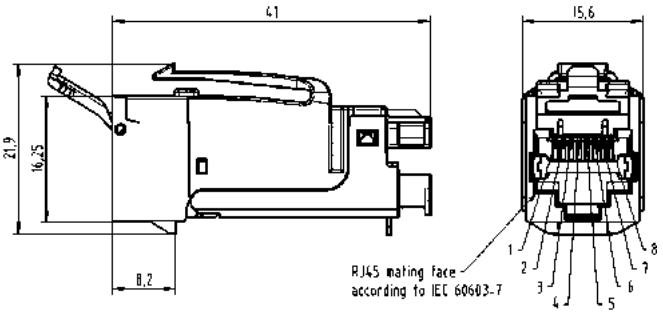

[1)] For part number 09 45 545 1564
[2)] For part number 09 45 545 1563 and 09 45 545 1122

HARTING RJ Industrial® 10G Extender

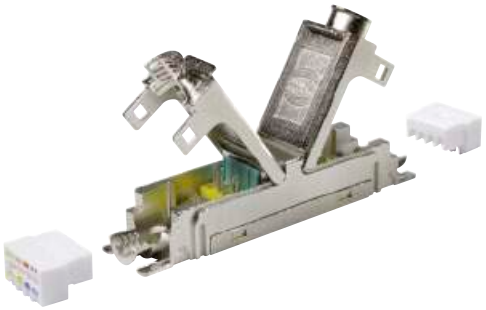

HARTING RJ Industrial® 10G Extender

Advantages

- Simple, fast and reliable connection of data cables
- Compact and robust design
- 360° shielding
- Category of transmission Cat. 6_A
- Suitable for solid and stranded wires
- Field assembly without special tools

Application

- Extension of cables for data communication
- Connection of cables with different cross-sections
- Linking of fire compartments

Technical characteristics

Connector type	RJ45 connector acc. to IEC 60 603-7
Number of contacts	8
Transmission category	Category 6_A, Class E_A, suitable for 1/10 Gigabit Ethernet
Transmission performance	Category 6_A / Class E_A up to 500 MHz acc. to ISO/IEC 11 801:2002, EN 50 173-1
Transmission rate	10/100 Mbit/s and 1/10 Gbit/s
Shielding	fully shielded, 360° shielding contact
Mounting	IDC termination
Connectable cables – Conductor cross section – Conductor diameter	 AWG 23 … AWG 22 (solid and stranded) 1.3 … 1.6 mm
Cable diameter	5 … 9 mm
Degree of protection	IP20
Temperature range	-40 °C ... +70 °C
Housing material	Zinc die-cast, nickel-plated

Identification	Part number	Drawing	Dimensions in mm
HARTING RJ Industrial® 10G Extender	09 45 545 1569	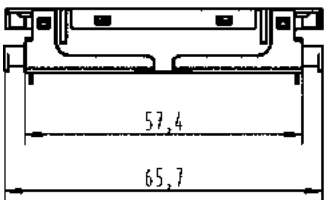	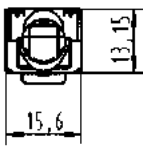

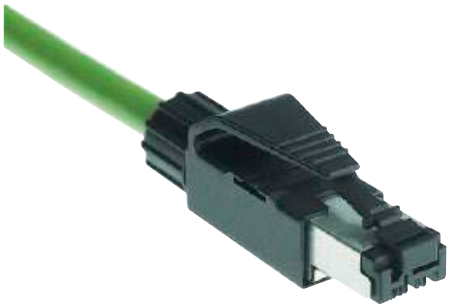

HARTING RJ Industrial® connector set RJ45, 4-poles

Advantages

- RJ45 Ethernet-Data connector suitable for industry
- Tool-less field-assembly with *HARAX*® rapid termination in IDC technology
- Compact design
- Ergonomical unlocking clip
- Less weight assures shock- and vibration-resisting connection
- Category of transmission Cat. 5
- Suitable for termination of solid and stranded cables
- Up to 10 x reconductable
- PROFINET compatible
- Suitable for PoE (IEEE 802.3af) and PoE+ (IEEE 802.3at)

Technical characteristics

Connector type	RJ45 connector acc. to IEC 60 603-7
Number of contacts	4
Transmission performance	Category 5 / Class D up to 100 MHz acc. to ISO/IEC 11 801:2002, EN 50 173-1
Transmission rate	10/100 Mbit/s
Mounting	field-assembly
Cable termination	with IDC-contacts, without tools
Connectable cables	
- Conductor cross section	AWG 24/7 … AWG 22/7 (stranded) AWG 23/1 … AWG 22/1 (solid) AWG 26/7 (09 45 151 1109)
- Conductor diameter	max. 1.6 mm (09 45 151 1100 / 09 45 151 1108) max. 1.2 mm (09 45 151 1109)
- Cable diameter	6.1 … 6.9 mm
Mating cycles	min. 750
Degree of protection	IP20
Temperature range	-40 °C … +70 °C
Housing material	Polyamide, UL 94-V0
Colour	black
	UL approval (E102079)

Identification	Part number	Drawing	Dimensions in mm
HARTING RJ Industrial® connector set RJ45, 4-poles		Mating face acc. to IEC 60 603-7	
incl.: housing with shielding, splicing element, cable gland and instruction manual	09 45 151 1100 09 45 151 1108[1)]		
like 09 45 151 1100 but for AWG 26	09 45 151 1109		

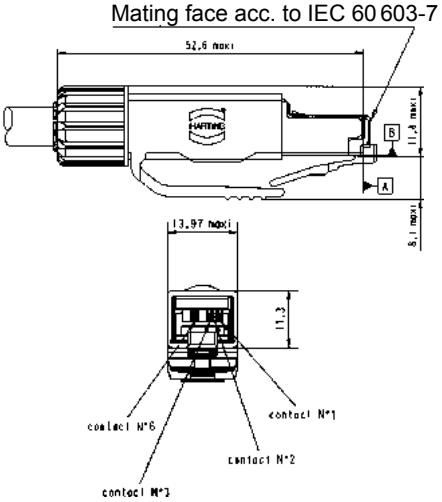

[1)] Packaging with 100 sets

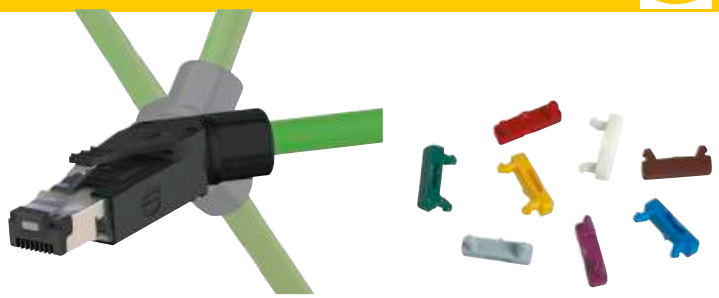

HARTING RJ Industrial® PN connector set RJ45, 4-poles

Advantages

- RJ45 Ethernet-Data connector suitable for industry
- Field-assembly with *HARAX*® quick termination in IDC technology
- Compact design
- Ergonomically unlocking clip
- Less weight assures shock- and vibration resisting connection
- Category of transmission Cat. 5
- Suitable for solid and stranded wires
- Suitable for PoE (IEEE 802.3af) and PoE+ (IEEE 802.3at)

Technical characteristics

Connector type	RJ45 connector acc. to IEC 60603-7
Number of contacts	4
Transmission category	Category 5, class D
Transmission performance	Category 5 / Class D up to 100 MHz acc. to ISO/IEC 11801:2002, EN 50173-1
Transmission rate	10/100 Mbit/s
Shielding	fully shielded, 360° shielding contact
Mounting	Field-assembly
Cable termination	with IDC-contacts, without tools
Connectable cables	
- Conductor cross section	AWG 27 … AWG 22 (solid / stranded)
- Conductor diameter	max. 1.6 mm (incl. insulation)
- Cable diameter	4.5 ... 9 mm (straight version) 4.5 up to 8 mm (45° angled version)
Mating cycles	min. 750
Degree of protection	IP20
Temperature range	-40 °C … +70 °C
Housing material	Polyamide, UL 94-V0
Colour	black

Identification	Part number	Drawing	Dimensions in mm
HARTING RJ Industrial® PN connector set RJ45, 4-poles			
straight version	09 45 151 1120		
45° angled version (four different cable outlets possible)	09 45 151 1121		

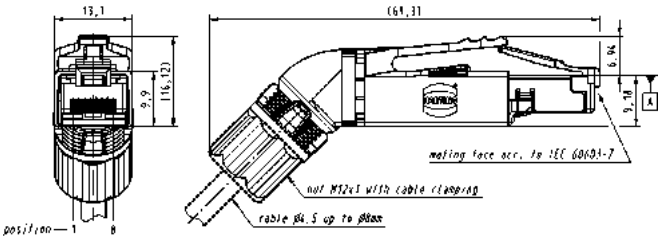

Identification	Colour	Part number
Colour clips for colour coding the HARTING RJ Industrial® PN connector If required the colour clips can be equipped with an RFID-chip for automatic patch cable-ID recognition and storage.	White	09 45 850 0001
	Grey	09 45 850 0002
	Yellow	09 45 850 0003
	Magenta	09 45 850 0005
	Red	09 45 850 0007
	Blue	09 45 850 0008
	Green	09 45 850 0009
	Brown	09 45 850 0010

HARTING RJ Industrial®

HARTING RJ Industrial® EtherRail® RJ45 connector set, 4-poles

Advantages

- RJ45 Ethernet-Data connector suitable for industry
- Field-assembly with *HARAX*® quick termination in IDC technology
- Compact design
- Ergonomically unlocking clip
- Less weight assures shock- and vibration resisting connection
- Category of transmission Cat. 5
- Suitable for solid and stranded wires
- Suitable for PoE (IEEE 802.3af) and PoE+ (IEEE 802.3at)
- Optimized version for Ha-VIS EtherRail® Ethernet cable, Shielded Star Quad Cable, AWG 22/19 ultra-flexible, according Cat. 5 cabling standard (ISO/IEC 11 801), part numbers 09 45 600 0188, 09 45 600 0138, 09 45 600 0148 and 09 45 600 0158

Technical characteristics

Connector type	RJ45 connector acc. to IEC 60 603-7
Number of contacts	4
Transmission category	Category 5, class D
Transmission performance	Category 5 / Class D up to 100 MHz acc. to ISO/IEC 11 801:2002, EN 50 173-1
Transmission rate	10/100 Mbit/s
Shielding	fully shielded, 360° shielding contact
Mounting	Field-assembly
Cable termination	with IDC-contacts, without tools
Connectable cables	
- Conductor cross section	AWG 27 … AWG 22 (solid / stranded)
- Conductor diameter	max. 2 mm (incl. insulation)
- Cable diameter	4.5 ... 9 mm
Mating cycles	min. 750
Degree of protection	IP20
Temperature range	-40 °C … +70 °C
Housing material	Polyamide, UL 94-V0
Colour	black

Identification	Part number	Drawing	Dimensions in mm
HARTING RJ Industrial® EtherRail® RJ45 connector set, 4-poles			
straight version	09 45 151 1122	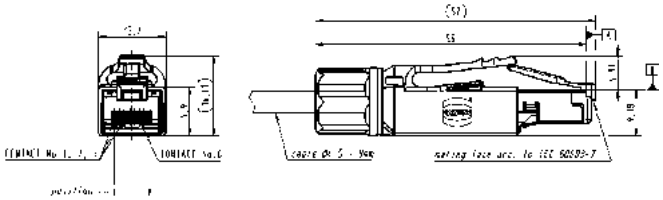	

Identification	Colour	Part number
Colour clips for colour coding the HARTING RJ Industrial® EtherRail® RJ45 connector If required the colour clips can be equipped with an RFID-chip for automatic patch cable-ID recognition and storage.	White	09 45 850 0001
	Grey	09 45 850 0002
	Yellow	09 45 850 0003
	Magenta	09 45 850 0005
	Red	09 45 850 0007
	Blue	09 45 850 0008
	Green	09 45 850 0009
	Brown	09 45 850 0010

HARTING RJ Industrial® PN Compact

HARTING RJ Industrial® PN Compact connector set, 4-poles

Advantages

- RJ45 Ethernet-Data connector suitable for industry
- Field-assembly with piercing contacts
- Compact design
- Less weight assures shock- and vibration resisting connection
- Category of transmission Cat. 5
- Suitable for PoE (IEEE 802.3af) and PoE+ (IEEE 802.3at)

Technical characteristics

Connector type	RJ45 connector acc. to IEC 60 603-7
Number of contacts	4
Transmission performance	Category 5 / Class D up to 100 MHz acc. to ISO/IEC 11 801:2002, EN 50 173-1
Transmission rate	10/100 Mbit/s
Shielding	fully shielded, 360° shielding contact
Mounting	Field-assembly
Cable termination	with piercing contacts
Connectable cables	
- Conductor cross section	AWG 24/7 … AWG 22/7 (stranded)
- Conductor diameter	max. 1.6 mm (incl. insulation)
- Cable diameter	4.5 ... 7.5 mm
Mating cycles	min. 750
Degree of protection	IP20
Temperature range	-40 °C … +70 °C
Housing material	PA, UL 94-V0
Colour	green
	UL approval (E102079)

Identification	Part number	Drawing	Dimensions in mm
HARTING RJ Industrial® PN Compact connector set, 4-poles			
Compact version	09 45 151 1130[1)]	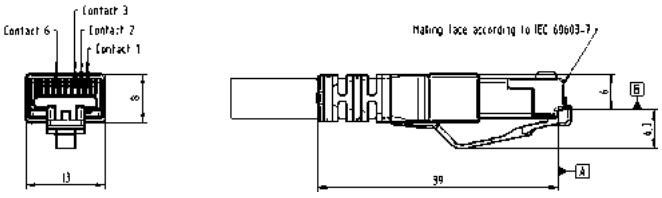	
Assembly tool	09 45 800 0530		

1) Packaging with 100 sets

HARTING RJ Industrial® Gigalink, 8-poles

HARTING RJ Industrial® connector set RJ45, 8-poles

Advantages

- RJ45 Ethernet-Data connector suitable for industry
- Field-assembly with piercing contacts
- Compact design
- Ergonomically unlocking clip
- Less weight assures shock- and vibration resisting connection
- Category of transmission Cat. 6_A
- Suitable for PoE (IEEE 802.3af) and PoE+ (IEEE 802.3at)

Technical characteristics

Connector type	RJ45 connector acc. to IEC 60603-7
Number of contacts	8
Transmission performance	Category 6_A / Class E_A up to 500 MHz acc. to ISO/IEC 11801:2002, EN 50173-1
Transmission rate	10/100 Mbit/s and 1/10 Gbit/s
Shielding	fully shielded, 360° shielding contact
Mounting	Field-assembly
Cable termination	with piercing contacts
Connectable cables	
- Conductor cross section	AWG 28/7 … AWG 24/7 (stranded)
- Conductor diameter	max. 1.05 mm (incl. insulation)
- Cable diameter	6.1 ... 6.9 mm
Mating cycles	min. 750
Degree of protection	IP20
Temperature range	-40 °C … +70 °C
Housing material	Polycarbonate, UL 94-V0
Colour	black
	UL approval (E102079)

Identification	Part number	Drawing	Dimensions in mm
HARTING RJ Industrial® connector set RJ45, 8-poles incl.: housing with shielding, cable gland and instruction manual	09 45 151 1520 09 45 151 1520 XL[1)]	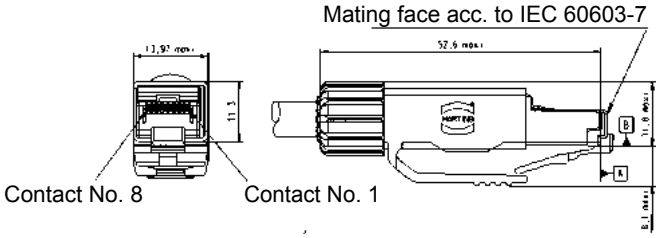	
Assembly tool for 09 45 151 1520	09 45 800 0520		
Compact version	09 45 151 1525[1)]	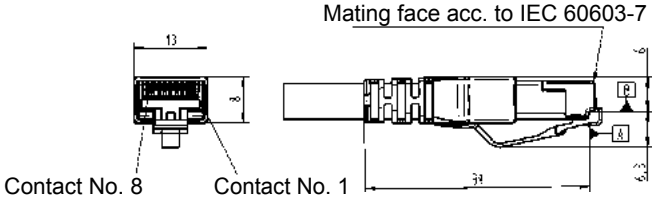	
Assembly tool for 09 45 151 1525	09 45 800 0025		

[1)] Packaging with 100 sets

HARTING RJ Industrial® 10G

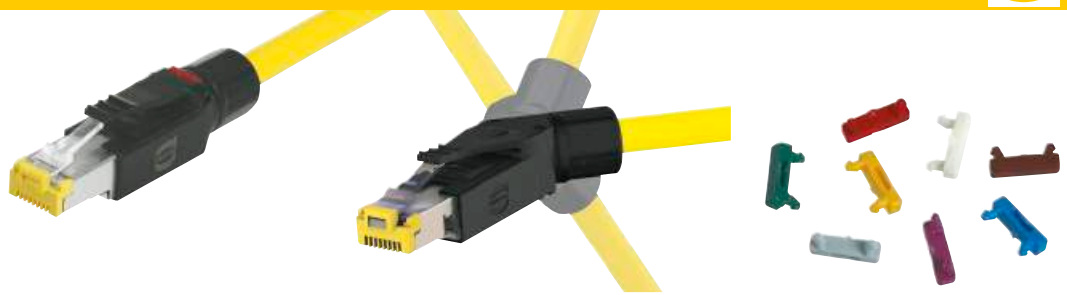

HARTING RJ Industrial® 10G connector set RJ45, 8-poles

Advantages

- RJ45 Ethernet-Data connector suitable for industry
- Field-assembly with *HARAX*® quick termination in IDC technology
- Compact design
- Ergonomically unlocking clip
- Less weight assures shock- and vibration resisting connection
- Category of transmission Cat. 6
- Suitable for solid and stranded wires
- Suitable for PoE (IEEE 802.3af) and PoE+ (IEEE 802.3at)

Technical characteristics

Connector type	RJ45 connector acc. to IEC 60603-7
Number of contacts	8
Transmission category	Category 6, class E_A, suitable for 1/10 Gigabit Ethernet
Transmission performance	Category 6 / Class E_A up to 500 MHz acc. to ISO/IEC 11801:2002, EN 50173-1
Transmission rate	10/100 Mbit/s and 1/10 Gbit/s
Shielding	fully shielded, 360° shielding contact
Mounting	Field-assembly
Cable termination	with IDC-contacts, without tools
Connectable cables	
- Conductor cross section	AWG 27 … AWG 22 (solid / stranded)
- Conductor diameter	max. 1.6 mm (incl. insulation)
- Cable diameter	4.5 ... 9 mm (straight version) 4.5 up to 8 mm (45° angled version)
Mating cycles	min. 750
Degree of protection	IP20
Temperature range	-40 °C … +70 °C
Housing material	Polyamide, UL 94-V0
Colour	black

Identification	Part number	Drawing	Dimensions in mm
HARTING RJ Industrial® 10G connector set RJ45, 8-poles			
straight version	09 45 151 1560 09 45 151 1560 XL[1)]		
45° angled version (four different cable outlets possible)	09 45 151 1561		

Identification	Colour	Part number
Colour clips for colour coding the HARTING RJ Industrial® 10G connector If required the colour clips can be equipped with an RFID-chip for automatic patch cable-ID recognition and storage.	White	09 45 850 0001
	Grey	09 45 850 0002
	Yellow	09 45 850 0003
	Magenta	09 45 850 0005
	Red	09 45 850 0007
	Blue	09 45 850 0008
	Green	09 45 850 0009
	Brown	09 45 850 0010

[1)] Packaging with 100 sets

HARTING RJ Industrial® – Tools

Identification	Part number	
HARTING RJ Industrial® Stripping Tool Stripping tool for Ethernet cables including blade cassette	09 45 800 0000	 The RJ Industrial Stripping Tool is ready to remove insulation from cables for fast mounting with diameters from 2.5 to 8 mm quick and easy. It allows to remove cable sheath and shielding braid in one.
Spare blade cassette	09 45 800 0001	
Stripping tool	09 45 800 0002	
HARTING RJ Industrial® Gigalink Mounting tools for HARTING RJ Industrial® Gigalink connectors	09 45 800 0520	 With the RJ Industrial Gigalink Assembly Tool Ethernet connectors can be quickly, easily and reliably connected to flexible cables.
for HARTING RJ Industrial® Gigalink Cat. 6_A compact connectors	09 45 800 0025	
Wire cutter	09 45 800 0005	
Cable shear	09 45 800 0004	

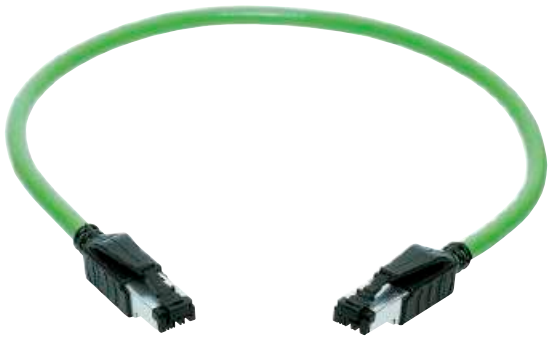

HARTING RJ Industrial® system cable RJ45, 4-wire, IP20

RJ45 patch cords for switch cabinet or PLC

Description	Part number Standard	Part number Multiport	Technical characteristics
For the cabling of Industrial Ethernet networks (for example in accordance with the PROFINET guideline), based on RJ45 connectors. Wiring: Contacts RJ45 1/2 and 3/6			Transmission properties in accordance with ISO/IEC 11 801:2002: Class D Mating face: 2 x RJ45 in acc. with IEC 60 603-7 Protection level: IP20 (if mated) Temperature range -40 °C … +70 °C **Electrical characteristics at 20 °C** Contact resistance: ≤ 20 mΩ Insulation resistance: ≥ 500 MΩ Dielectric withstanding voltage: contact - contact 1 kV contact - ground 1.5 kV **Electrical characteristics after damp heat cycles** Contact resistance: ≤ 20 mΩ Insulation resistance: ≥ 100 MΩ Dielectric withstanding voltage: contact - contact 1 kV contact - ground 1.5 kV
HARTING RJ Industrial® system cable RJ45, 4-wire Type A 			Cable type: Industrial Ethernet Standard Cable, 2 x 2 x AWG 22/1, double shielding (PROFINET Typ A) Sheath: PVC green, Ø 6.5 mm Connectors: 2 x HARTING RJ Industrial® IP20 Data with overmolded housings
Length 1.5 m	09 45 771 0023	09 47 343 4006	
Length 3.0 m	09 45 771 0025	09 47 343 4009	
Length 5.0 m	09 45 771 0027	09 47 343 4012	
Length 10.0 m	09 45 771 0051	09 47 343 4018	
Length 20.0 m	09 45 771 0053	09 47 343 4020	
HARTING RJ Industrial® system cable RJ45, 4-wire Type B 			Cable type: Industrial Ethernet Stranded Cable, 2 x 2 x AWG 22/7, double shielding (PROFINET Typ B) Sheath: PVC green, Ø 6.5 mm Connectors: 2 x HARTING RJ Industrial® IP20 Data with overmolded housings
Length 1.5 m	09 45 771 1123	09 47 343 4034	
Length 3.0 m	09 45 771 1125	09 47 343 4037	
Length 5.0 m	09 45 771 1127	09 47 343 4040	
Length 10.0 m	09 45 771 1151	09 47 343 4046	
Length 20.0 m	09 45 771 1153	09 47 343 4048	
HARTING RJ Industrial® system cable RJ45, 4-wire Type C 			Cable type: Industrial Ethernet Trailing Cable, 2 x 2 x AWG 22/7, double shielding (PROFINET Typ C) Sheath: PUR green, Ø 6.5 mm Connectors: 2 x HARTING RJ Industrial® IP20 Data with overmolded housings
Length 1.5 m	09 45 771 1164	09 47 343 4090	
Length 3.0 m	09 45 771 1166	09 47 343 4093	
Length 5.0 m	09 45 771 1168	09 47 343 4096	
Length 10.0 m	09 45 771 1173	09 47 343 4102	
Length 20.0 m	09 45 771 1175	09 47 343 4104	

Further system cables see HARTING-catalogue “Intelligent Network Solutions”

HARTING RJ Industrial® – System cables

Exit left

Exit right

Exit top

Exit bottom

HARTING RJ Industrial® system cable RJ45 angled, 4-wire, IP20

RJ45 connection cable, first end angled, second side open, for control or distributor cabinets or within controllers

Identification		Part number angled left	angled right	angled top	angled bottom
HARTING RJ Industrial® System cable RJ45 angled, 4-wire one side pre-assembled, second side open Cable type A, green 2 x 2 x AWG 22/1	Length 0.5 m	09 47 050 0001	09 47 060 0001	09 47 030 0001	09 47 040 0001
	Length 1.0 m	09 47 050 0002	09 47 060 0002	09 47 030 0002	09 47 040 0002
	Length 1.5 m	09 47 050 0003	09 47 060 0003	09 47 030 0003	09 47 040 0003
	Length 2.0 m	09 47 050 0004	09 47 060 0004	09 47 030 0004	09 47 040 0004
	Length 3.0 m	09 47 050 0005	09 47 060 0005	09 47 030 0005	09 47 040 0005
	Length 5.0 m	09 47 050 0007	09 47 060 0007	09 47 030 0007	09 47 040 0007
HARTING RJ Industrial® System cable RJ45 angled, 4-wire one side pre-assembled, second side open Cable type B, green 2 x 2 x AWG 22/7	Length 0.5 m	09 47 050 0023	09 47 060 0023	09 47 030 0023	09 47 040 0023
	Length 1.0 m	09 47 050 0024	09 47 060 0024	09 47 030 0024	09 47 040 0024
	Length 1.5 m	09 47 050 0025	09 47 060 0025	09 47 030 0025	09 47 040 0025
	Length 2.0 m	09 47 050 0026	09 47 060 0026	09 47 030 0026	09 47 040 0026
	Length 3.0 m	09 47 050 0027	09 47 060 0027	09 47 030 0027	09 47 040 0027
	Length 5.0 m	09 47 050 0029	09 47 060 0029	09 47 030 0029	09 47 040 0029
HARTING RJ Industrial® System cable RJ45 angled, 4-wire one side pre-assembled, second side open Cable type C, green 2 x 2 x AWG 22/7	Length 0.5 m	09 47 050 0045	09 47 060 0045	09 47 030 0045	09 47 040 0045
	Length 1.0 m	09 47 050 0046	09 47 060 0046	09 47 030 0046	09 47 040 0046
	Length 1.5 m	09 47 050 0047	09 47 060 0047	09 47 030 0047	09 47 040 0047
	Length 2.0 m	09 47 050 0048	09 47 060 0048	09 47 030 0048	09 47 040 0048
	Length 3.0 m	09 47 050 0049	09 47 060 0049	09 47 030 0049	09 47 040 0049
	Length 5.0 m	09 47 050 0051	09 47 060 0051	09 47 030 0051	09 47 040 0051
HARTING RJ Industrial® System cable RJ45 angled, 4-wire one side pre-assembled, second side open Outdoor cable, black 2 x 2 x AWG 22/7	Length 0.5 m	09 47 050 0067	09 47 060 0067	09 47 030 0067	09 47 040 0067
	Length 1.0 m	09 47 050 0068	09 47 060 0068	09 47 030 0068	09 47 040 0068
	Length 1.5 m	09 47 050 0069	09 47 060 0069	09 47 030 0069	09 47 040 0069
	Length 2.0 m	09 47 050 0070	09 47 060 0070	09 47 030 0070	09 47 040 0070
	Length 3.0 m	09 47 050 0071	09 47 060 0071	09 47 030 0071	09 47 040 0071
	Length 5.0 m	09 47 050 0073	09 47 060 0073	09 47 030 0073	09 47 040 0073

Further system cables see HARTING-catalogue “Intelligent Network Solutions”

HARTING Ethernet cabling Ha-VIS preLink®

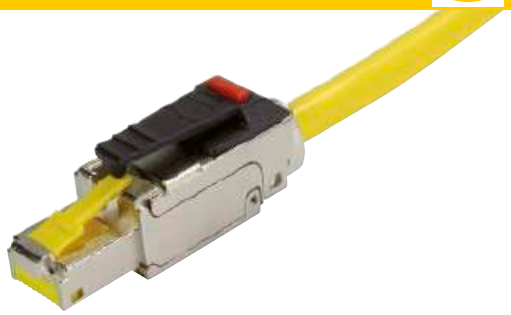

Ha-VIS preLink® RJ45 connector

Advantages

- RJ45 Ethernet-Data connector suitable for industry
- Compact and robust design
- 360° shielding
- Ergonomically unlocking clip
- Category of transmission Cat. 6_A
- Suitable for solid and stranded wires
- Suitable for PoE (IEEE 802.3af) and PoE+ (IEEE 802.3at)

Technical characteristics

Connector type	RJ45 connector acc. to IEC 60 603-7
Number of contacts	8
Transmission category	Category 6_A, Class E_A, suitable for 1/10 Gigabit Ethernet
Transmission performance	Category 6_A / Class E_A up to 500 MHz acc. to ISO/IEC 11 801:2002, EN 50 173-1
Transmission rate	10/100 Mbit/s and 1/10 Gbit/s
Shielding	fully shielded, 360° shielding contact
Mounting	IDC termination
Cable termination for preLink® terminal module, yellow, 20 82 000 0001	
Connectable cables	
– Conductor cross section	AWG 23 … AWG 22 (solid and stranded)
– Conductor diameter	1.3 … 1.6 mm
Cable termination for preLink® terminal module, white, 20 82 000 0003	
Connectable cables	
– Conductor cross section	AWG 27 … AWG 26 (solid and stranded)
– Conductor diameter	0.8 … 1.1 mm
Cable diameter	5 … 9 mm
Degree of protection	IP20
Mating cycles	min. 750
Temperature range	-40 °C ... +70 °C
Housing material	Zinc die-cast, nickel-plated

Identification	Part number	Drawing	Dimensions in mm
Ha-VIS preLink® RJ45 connector	20 82 101 0010	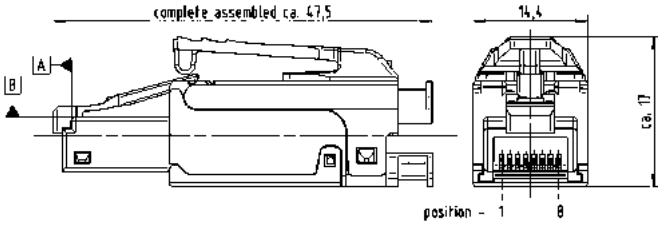	
Ha-VIS preLink® RJ45 terminal module			
AWG 22/23, yellow[1)]	20 82 000 0001		
AWG 26/27, white[1)]	20 82 000 0003		
Ha-VIS preLink® assembly tool	20 82 000 9901		

Identification	Colour	Part number
Colour clips for colour coding the Ha-VIS preLink® connectors	White	09 45 850 0001
	Grey	09 45 850 0002
	Yellow	09 45 850 0003
	Magenta	09 45 850 0005
	Red	09 45 850 0007
	Blue	09 45 850 0008
	Green	09 45 850 0009
	Brown	09 45 850 0010

[1)] Packaging with 10 pieces

Ha-VIS preLink® RJ45 jacks (HIFF)

Advantages

- Compact and robust design
- Category of transmission Cat. 6
- Suitable for solid and stranded wires
- Compatible with HIFF dimensions for use in:
  - Han® 3 A series with HIFF adapter 09 45 515 0024
  - HARTING PushPull (V4)
    - Compact bulkhead mounting housing 09 45 545 0028
    - EasyInstall bulkhead mounting housing 09 45 545 0032
  - Han® PushPull (V14)
    - Panel feed-through plastic 09 35 012 0331
    - Panel feed-through metal rectangular 09 35 012 0311
    - Panel feed-through metal circular 09 35 012 0312
  - *har*-port 09 45 452 0000
- Suitable for PoE (IEEE 802.3af) and PoE+ (IEEE 802.3at)

Technical characteristics

Connector type	RJ45 connector acc. to IEC 60 603-7
Number of contacts	8
Transmission category	Category 6_A, Class E_A, suitable for 1/10 Gigabit Ethernet
Transmission performance	Category 6_A / Class E_A up to 500 MHz acc. to ISO/IEC 11 801:2002, EN 50 173-1
Transmission rate	10/100 Mbit/s and 1/10 Gbit/s
Shielding	fully shielded, 360° shielding contact
Mounting	IDC termination
Cable termination for preLink® terminal module, yellow, 20 82 000 0001	
Connectable cables	
– Conductor cross section	AWG 23 … AWG 22 (solid and stranded)
– Conductor diameter	1.3 … 1.6 mm
Cable termination for preLink® terminal module, white, 20 82 000 0003	
Connectable cables	
– Conductor cross section	AWG 27 … AWG 26 (solid and stranded)
– Conductor diameter	0.8 … 1.1 mm
Cable diameter	5 … 9 mm
Degree of protection	IP20
Mating cycles	min. 750
Temperature range	-40 °C ... +70 °C
Housing material	Zinc die-cast, nickel-plated

Identification		Part number	Drawing	Dimensions in mm
Ha-VIS preLink® set RJ45 jack consists of: • 1x RJ45 module • 1x terminal module • 1x cable tie	AWG 22/23 AWG 26/27	20 82 001 0001 20 82 001 0002	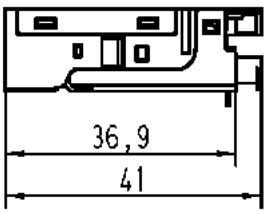	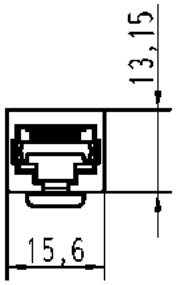
Ha-VIS preLink® RJ45 jack module		20 82 000 0002		
Ha-VIS preLink® RJ45 terminal module	AWG 22/23, yellow[1)] AWG 26/27, white[1)]	20 82 000 0001 20 82 000 0003		
Ha-VIS preLink® protection cover		20 82 000 9915		
Ha-VIS preLink® unlocking tool		20 82 000 9916		
Ha-VIS preLink® assembly tool		20 82 000 9901		

[1)] Packaging with 10 pieces

Ha-VIS preLink®
19“ Patch panel, HIFF

Advantages

- Flexible, suitable for Ha-VIS preLink® modules RJ45 jack and HARTING RJ Industrial® modules in HIFF size
- Economical, time-saving installation due to the slidable module carrier, frontward and backward removal
- Safety, additional strain-relief
- Fully shielded modules connected by module carrier
- Earth bolt
- IP20 installation for distributors and switch cabinets

Technical characteristics

Number of modules	24
Transmission performance	Category 6 / Class E_A up to 500 MHz acc. to ISO/IEC 11 801:2002, EN 50 173-1
Transmission rate	up to 10 Gbit/s
Assembly	in 19“ racks acc. to IEC/DIN EN 60 297-3-100 (DIN 41 494-1)
Dimensions (W x H x D)	482.6 mm (19“) x 44.5 mm (1 U) x 181 mm
Degree of protection	IP20
Operating temperature range	-40 °C … +70 °C
Material	
module carrier, 2-parts	steel sheet
front cover	stainless steel

Identification	Part number	Drawing	Dimensions in mm
Ha-VIS preLink® 19“ patch panel, unloaded Suitable modules: • Ha-VIS preLink® RJ45 jack, HIFF • mixed loading possible Range of delivery:: • Screw set M5 • 24 cable ties • 1x earth conductor 6 mm²	20 82 400 0001	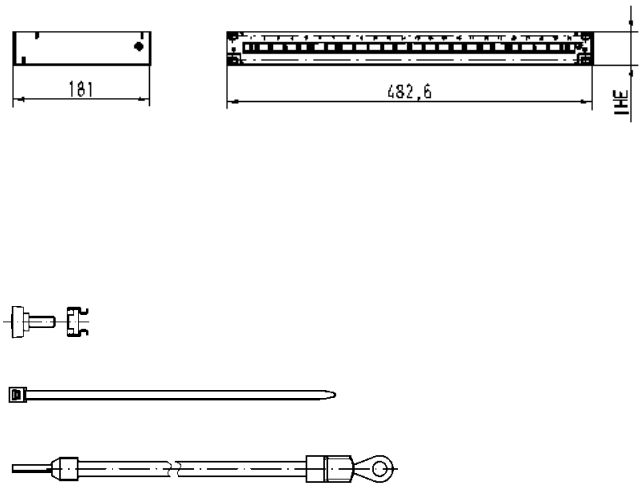	

Ha-VIS preLink®
HIFF RJ45 AP Box

Advantages

- Flexible, suitable for on-wall mounting or for top-hat mounting rail (35 mm)
- Economical, time-saving installation due to the use of pre-assembled data cables with Ha-VIS preLink® termination
- Robust design, powder-coated steel plate housing
- Structured cabling for industrial premises

Technical characteristics

Number of ports, Copper / Termination	2 / RJ45 jack HIFF
Transmission performance	Category 6 / Class E_A up to 500 MHz acc. to ISO/IEC 11 801:2002, EN 50 173-1
Transmission rate	up to 10 Gbit/s
Shielding	Fully shielded, 360° shielding contact
Cable diameter	5 mm ... 9 mm
Mounting	on-wall or DIN Rail
Dimensions (WxHxD)	60 x 81 x 70 mm
Degree of protection	IP20
Operating temperature	-40 °C … +70 °C
Housing material	steel plate
Colour	Anthracite grey (RAL 7016)

Identification	Part number	Drawing	Dimensions in mm
Ha-VIS preLink® HIFF RJ45 AP Box RJ45 wall-mounted box consisting of: • 1x steel-plate housing, 2-parts • 2x Ha-VIS preLink® Set, RJ45 jack HIFF, AWG 22/23 • 2x grommet with membrane • 1x assembly instruction	20 82 101 0220	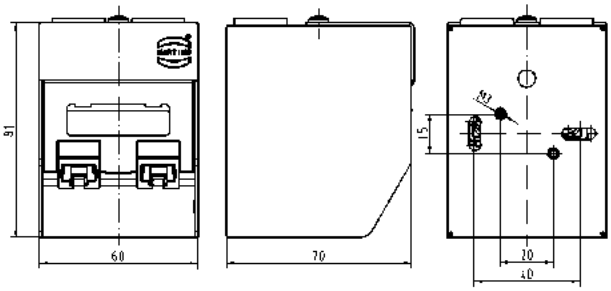	
Accessory DIN Rail mounting bracket	20 80 000 0003	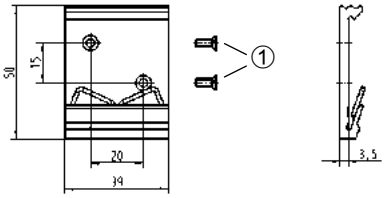	

Ha-VIS preLink®
Han® PushPull Metal Outlet
and Han® 3 A Metal Outlet

Advantages

- Simple mounting, fixing and earth connection both outside
- Fast termination of data cables due to Ha-VIS preLink® technology
- Structured cabling for industrial premises
- Mating face AIDA compliant, protection cover incl.
- PROFINET compatible

Technical characteristics

Number of ports, Copper / Termination	2 x Han® PushPull RJ45 (IP65 / IP67) or Han® 3 A RJ45
Transmission performance	Category 6 / Class E_A up to 500 MHz acc. to ISO/IEC 11 801:2002, EN 50 173-1
Transmission rate	up to 10 Gbit/s
Termination	Ha-VIS preLink®
Wire gauge	AWG 24 ... 22 (0.25 mm² ... 0.34 mm²) solid and stranded
Strand diameter	Ø 1.3 mm ... 1.6 mm
Cable diameter	7.2 mm ... 8 mm
Shielding	Fully shielded 360° flexible shielding termination
Mounting	Wall mounting
Dimensions (H x W x D)	105 x 105 x 40.5 mm
Degree of protection	IP65 / IP67
Operating temperature range	-40 °C … +70 °C
Housing material	Aluminium, die-cast
Colour	Black

Identification	Part number	Drawing	Dimensions in mm
Ha-VIS preLink® Han® PushPull Metal Outlet consists of: • 1x Housing including protection covers • 2x Ha-VIS preLink® Set RJ45 jack AWG 22/23 • 2x Cable gland with slotted seal • 1x Assembly instruction	20 82 104 0101	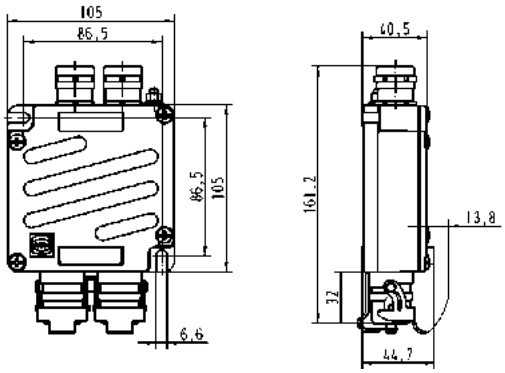	
Ha-VIS preLink® Han® 3 A Metal Outlet consists of: • 1x Housing including protection covers • 2x Ha-VIS preLink® Set RJ45 jack AWG 22/23 • 2x Cable gland with slotted seal • 1x Assembly instruction	20 82 102 0101	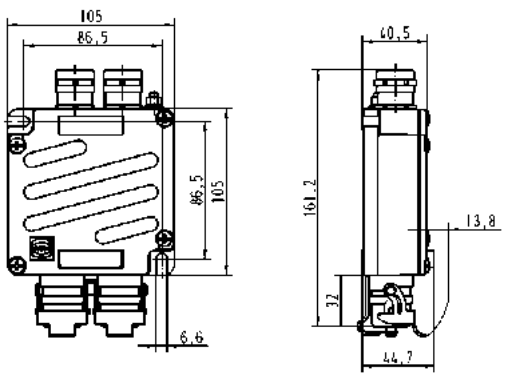	

Ha-VIS preLink® RJ45 jack (keystone version)

Advantages

- RJ45 Ethernet-Data jack suitable for industry
- Compact and robust design
- 360° shielding
- Ergonomically unlocking clip
- Category of transmission Cat. 6_A
- Suitable for solid and stranded wires
- Compatible with keystone panel cut out acc. to IEC 60 603-7
- Suitable for PoE (IEEE 802.3af) and PoE+ (IEEE 802.3at)

Technical characteristics

Connector type	RJ45 connector acc. to IEC 60 603-7
Number of contacts	8
Transmission category	Category 6_A, Class E_A, suitable for 1/10 Gigabit Ethernet
Transmission performance	Category 6_A / Class E_A up to 500 MHz acc. to ISO/IEC 11 801:2002, EN 50 173-1
Transmission rate	10/100 Mbit/s and 1/10 Gbit/s
Shielding	fully shielded, 360° shielding contact
Mounting	IDC termination
Cable termination for preLink® terminal module, yellow, 20 82 000 0001	
Connectable cables	
– Conductor cross section	AWG 23 … AWG 22 (solid and stranded)
– Conductor diameter	1.3 … 1.6 mm
Cable termination for preLink® terminal module, white, 20 82 000 0003	
Connectable cables	
– Conductor cross section	AWG 27 … AWG 26 (solid and stranded)
– Conductor diameter	0.8 … 1.1 mm
Cable diameter	5 … 9 mm
Degree of protection	IP20
Mating cycles	min. 750
Temperature range	-40 °C ... +70 °C
Housing material	Zinc die-cast, nickel-plated

Identification		Part number
Ha-VIS preLink® set RJ45 keystone jack consists of: • 1x RJ45 module • 1x terminal module • 1x cable tie	AWG 22/23	20 82 501 0001
Ha-VIS preLink® RJ45 keystone jack module		20 82 500 0001
Ha-VIS preLink® RJ45 angled keystone jack module		20 82 500 0002[2]
Ha-VIS preLink® RJ45 terminal module	AWG 22/23, yellow[1] AWG 26/27, white[1]	20 82 000 0001 20 82 000 0003
Ha-VIS preLink® protection cover		20 82 000 9915
Ha-VIS preLink® unlocking tool		20 82 000 9916
Ha-VIS preLink® assembly tool		20 82 000 9901

Drawing — Dimensions in mm

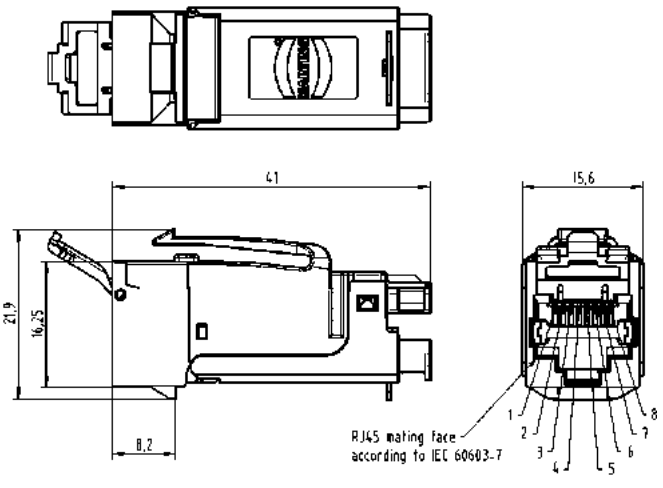

[1] Packaging with 10 pieces
[2] Packaging with 24 pieces

Ha-VIS preLink®
19“ Patch panel, keystone

Advantages

- Suitable for Ha-VIS preLink® RJ45 module in keystone size
  - Economic due to easy design
  - Safety, additional strain-relief
  - Fully shielded modules connected through metal holding fixture
  - Earth bolt

Technical characteristics

Number of modules	24
Transmission performance	Category 6 / Class E_A up to 500 MHz acc. to ISO/IEC 11 801:2002, EN 50 173-1
Transmission rate	up to 10 Gbit/s
Module design	Keystone size acc. to EN 60 603-7:2009
Assembly	in 19“ racks acc. to IEC/DIN EN 60 297-3-100 (DIN 41 494-1)
Dimensions (W x H x D)	482.6 mm (19“) x 44.5 mm (1 U) x 107 mm
Degree of protection	IP20
Operating temperature range	-40 °C … +70 °C
Material	steel sheet

Identification	Part number	Drawing	Dimensions in mm
Ha-VIS preLink® 19“ patch panel, keystone	20 82 405 0001	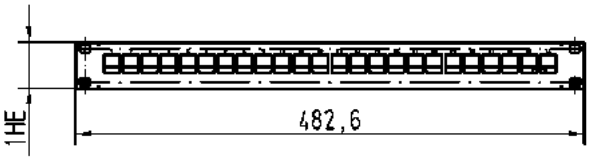	
Range of delivery: 24 pieces of: • Ha-VIS preLink® RJ45 keystone jack • terminal modules for AWG 22 / 23 • strain relief		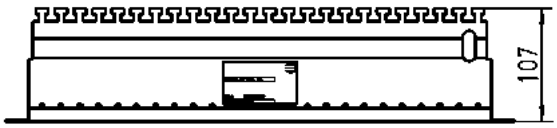	
Ha-VIS preLink® 19“ patch panel, keystone empty	20 82 400 0002		

HARTING Cabinet Outlet RJ45, 8-poles

RJ45 distribution module for IP20 environments
(top-hat rail mounting)

Advantages

- Simple mountng
- Dust protection caps
- Port identification
- Angled output

Technical characteristics

Number of ports, Copper / Termination	1 / RJ45 (Twisted Pair)
Transmission performance	Category 6_A / Class E_A up to 250 MHz acc. to ISO/IEC 11 801:2002, EN 50 173-1
Transmission rate	10/100 Mbit/s and 1/10 Gbit/s
Mounting	To 35 mm top-hat mounting rail acc. to DIN EN 60 715, alignable
Dimensions (H x W x D)	71 x 18 x 68 mm
Degree of protection	IP20
Operating temperature range	–20 °C … +70 °C
Housing material	Polyamide, UL94 V-0
Colour	Grey

Identification	Part number	Drawing	Dimensions in mm
HARTING RJ Industrial® Cabinet Outlet RJ45	09 45 851 0000	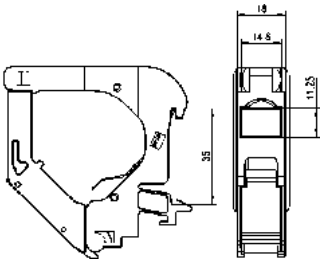	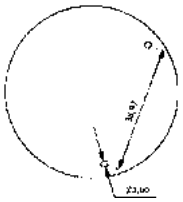
Protection cover set for 09 45 851 0000	09 45 851 0001		
Usable RJ45 cable jacks			
• Ha-VIS preLink® keystone set AWG 22/23 (with Ha-VIS preLink® terminal block)	20 82 501 0001		
• Ha-VIS preLink® keystone set (without Ha-VIS preLink® terminal block)	20 82 500 0001		
Usable with Ha-VIS preLink® terminal blocks			
• Ha-VIS preLink® terminal block AWG 22/23 (24)	20 82 000 0001		
• Ha-VIS preLink® terminal block AWG 26/27	20 82 500 0003		
Usable RJ45 cable jacks			
• RJ45 keystone module IDC AWG 24 – AWG 22	09 45 545 1564		
• RJ45 keystone module IDC AWG 27 – AWG 26	09 45 545 1563		

HARTING Ethernet cabling Ha-VIS preLink®

Ha-VIS preLink® Patch cables

Advantages

- Pre-assembled system cable, fast, flexible and reliable in the application
- Simple in handling
- Robust in design
- Installation of Ha-VIS preLink® cables for industrial environment
- Connection cable for control or distributor cabinets or within controllers

Technical characteristics

Cable types	4 x 2 AWG 27/7, shielded, S/FTP Cat. 7
Sheath material	PUR
Wiring	TIA/EIA 568B, 1:1
Transmission performance	Category 6 / Class E_A up to 500 MHz acc. to ISO/IEC 11 801:2002, EN 50 173-1
Transmission rate	up to 10 Gbit/s
Shielding	Copper braid, tinned
Operating temperature range fixed operation flexible operation	 -35 °C … +70 °C -5 °C ... +50 °C
Standard lengths	0.6 m / 1 m / 2 m / 3 m / 5 m / 10 m other lengths available on request
Colour	Yellow

Identification			Part number	Drawing	Dimensions in mm
Ha-VIS preLink® Patch cable			Yellow		
terminal module to one side, secured by protection cap	Length	0.2 m	20 82 600 1002		
		0.4 m	20 82 600 1004		
		0.6 m	**20 82 600 1006**		
		0.8 m	20 82 600 1008		
	I	1.0 m	**20 82 600 1010**		
		2.0 m	**20 82 600 1020**		
		3.0 m	**20 82 600 1030**		
		4.0 m	20 82 600 1040		
		5.0 m	**20 82 600 1050**		
		10.0 m	**20 82 600 1100**		
terminal module to both sides, secured by protection cap	Length	0.2 m	20 82 600 2002		
		0.4 m	20 82 600 2004		
		0.6 m	**20 82 600 2006**		
		0.8 m	20 82 600 2008		
	II	1.0 m	**20 82 600 2010**		
		2.0 m	**20 82 600 2020**		
		3.0 m	**20 82 600 2030**		
		4.0 m	20 82 600 2040		
		5.0 m	**20 82 600 2050**		
		10.0 m	**20 82 600 2100**		
Side 1 with terminal module, secured by protection cap Side 2 RJ45 overmoulded, with locking lever protection	Length	0.2 m	20 82 601 1002		
		0.4 m	20 82 601 1004		
		0.6 m	**20 82 601 1006**		
		0.8 m	20 82 601 1008		
	III	1.0 m	**20 82 601 1010**		
		2.0 m	**20 82 601 1020**		
		3.0 m	**20 82 601 1030**		
		4.0 m	20 82 601 1040		
		5.0 m	**20 82 601 1050**		
		10.0 m	**20 82 601 1100**		

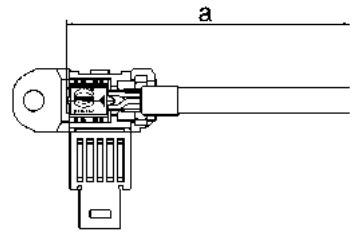

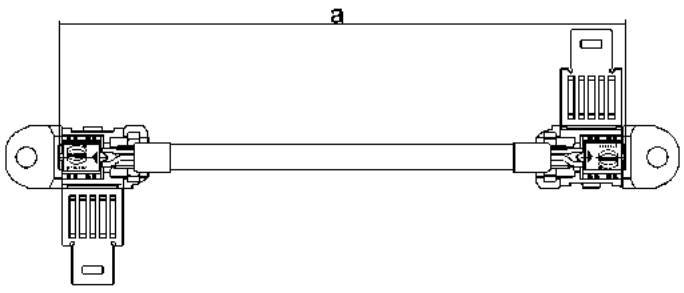

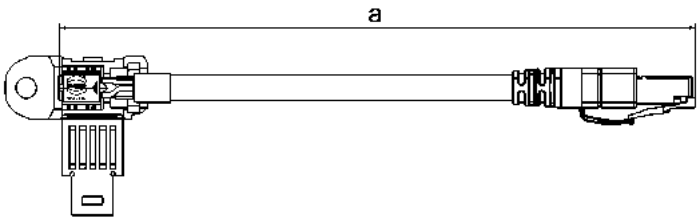

HARTING Ethernet cabling Ha-VIS preLink®

Ha-VIS preLink® Extender

Advantages

- Simple, fast and reliable connection of data cables
- Compact and robust design
- 360° shielding
- Category of transmission Cat. 6_A
- Suitable for solid and stranded wires

Application

- Extension of cables for data communication
- Connection of cables with different cross-sections
- Linking of fire compartments

Technical characteristics

Connector type	RJ45 connector acc. to IEC 60 603-7
Number of contacts	8
Transmission category	Category 6_A, Class E_A, suitable for 1/10 Gigabit Ethernet
Transmission performance	Category 6_A / Class E_A up to 500 MHz acc. to ISO/IEC 11 801:2002, EN 50 173-1
Transmission rate	10/100 Mbit/s and 1/10 Gbit/s
Shielding	fully shielded, 360° shielding contact
Mounting	IDC termination
Cable termination for preLink® terminal module, yellow, 20 82 000 0001	
Connectable cables	
– Conductor cross section	AWG 23 … AWG 22 (solid and stranded)
– Conductor diameter	1.3 … 1.6 mm
Cable termination for preLink® terminal module, white, 20 82 000 0003	
Connectable cables	
– Conductor cross section	AWG 27 … AWG 26 (solid and stranded)
– Conductor diameter	0.8 … 1.1 mm
Cable diameter	5 … 9 mm
Degree of protection	IP20
Mating cycles	min. 750
Temperature range	-40 °C ... +70 °C
Housing material	Zinc die-cast, nickel-plated

Identification	Part number	Drawing	Dimensions in mm
Ha-VIS preLink® Extender	20 82 101 0001	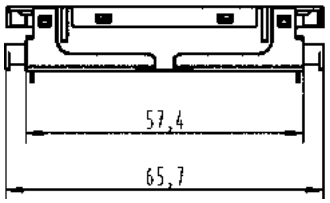	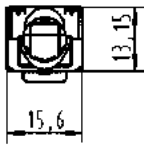
Ha-VIS preLink® RJ45 terminal module			
AWG 22/23, yellow[1)]	20 82 000 0001		
AWG 26/27, white[1)]	20 82 000 0003		
Ha-VIS preLink® assembly tool	20 82 000 9901		

[1)] Packaging with 10 pieces

PROFINET INDUSTRIAL ETHERNET

Mating face

D-coding
Mating face
acc. to IEC 61076-2-101

Ha-VIS preLink® M12 connector D-coding

Advantages

- M12 Ethernet-Data connector suitable for industry
- Robust design
- 360° shielding
- Suitable for solid and stranded wires
- Suitable for PoE (IEEE 802.3af) and PoE+ (IEEE 802.3at)

Technical characteristics

Connector type	M12 D-coding acc. to IEC 61 076-2-101
Number of contacts	4
Transmission category	Category 5, Class D, suitable for 1/10 Gigabit Ethernet
Transmission performance	Category 5 / Class D up to 200 MHz acc. to ISO/IEC 11 801:2002, EN 50 173-1
Transmission rate	10/100 Mbit/s
Shielding	fully shielded, 360° shielding contact
Mounting	IDC termination
Cable termination for preLink® terminal module, yellow, 20 82 000 0001	
Connectable cables	
– Conductor cross section	AWG 23 … AWG 22 (solid and stranded)
– Conductor diameter	1.3 … 1.6 mm
Cable termination for preLink® terminal module, white, 20 82 000 0003	
Connectable cables	
– Conductor cross section	AWG 27 … AWG 26 (solid and stranded)
– Conductor diameter	0.8 … 1.1 mm
Cable diameter	5 … 9 mm
Degree of protection	IP65 / IP67
Mating cycles	min. 750
Temperature range	-40 °C ... +70 °C
Housing material	Zinc die-cast, nickel-plated

Identification	Part number	Drawing	Dimensions in mm
preLink® M12 housing	20 82 000 1210	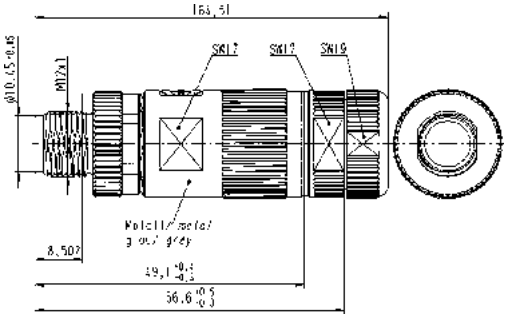	
preLink® M12 male module Male 4 poles, D-coding	20 82 005 1214	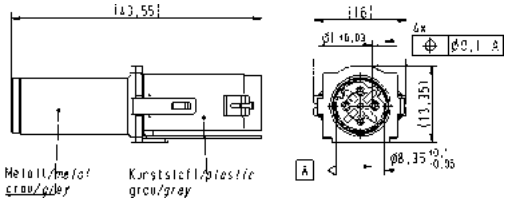	
preLink® M12 connector set D-coding	20 82 005 0001		
Ha-VIS preLink® RJ45 terminal module AWG 22/23, yellow[1)] AWG 26/27, white[1)]	20 82 000 0001 20 82 000 0003		
Ha-VIS preLink® assembly tool	20 82 000 9901		

1) Packaging with 10 pieces

HARTING Ethernet cabling Ha-VIS preLink®

PROFINET INDUSTRIAL ETHERNET

Mating face

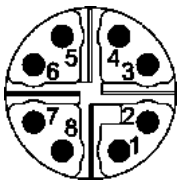

X-coding
Mating face
acc. to IEC 61 076-2-101

Ha-VIS preLink® M12 connector X-coding

Advantages

- M12 Ethernet-Data connector suitable for industry
- Robust design
- 360° shielding
- Category of transmission Cat. 6_A
- Suitable for solid and stranded wires
- Suitable for PoE (IEEE 802.3af) and PoE+ (IEEE 802.3at)

Technical characteristics

Connector type	M12 X-coding acc. to IEC 61 076-2-101
Number of contacts	8
Transmission category	Category 6_A, Class E_A, suitable for 1/10 Gigabit Ethernet
Transmission performance	Category 6_A / Class E_A up to 500 MHz acc. to ISO/IEC 11 801:2002, EN 50 173-1
Transmission rate	10/100 Mbit/s and 1/10 Gbit/s
Shielding	fully shielded, 360° shielding contact
Mounting	IDC termination
Cable termination for preLink® terminal module, yellow, 20 82 000 0001	
Connectable cables	
– Conductor cross section	AWG 23 … AWG 22 (solid and stranded)
– Conductor diameter	1.3 … 1.6 mm
Cable termination for preLink® terminal module, white, 20 82 000 0003	
Connectable cables	
– Conductor cross section	AWG 27 … AWG 26 (solid and stranded)
– Conductor diameter	0.8 … 1.1 mm
Cable diameter	5 … 9 mm
Degree of protection	IP65 / IP67
Mating cycles	min. 750
Temperature range	-40 °C ... +70 °C
Housing material	Zinc die-cast, nickel-plated

Identification	Part number	Drawing	Dimensions in mm
preLink® M12 housing	20 82 000 1210	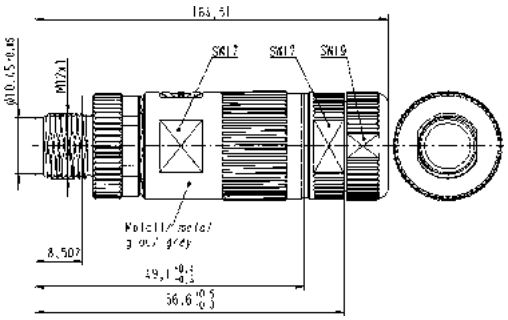	
preLink® M12 male module Male 8 poles, X-coding	20 82 006 1218	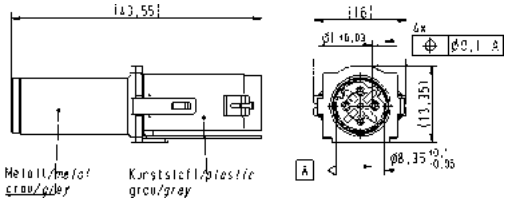	
preLink® M12 connector set X-coding	20 82 005 0002		
Ha-VIS preLink® RJ45 terminal module AWG 22/23, yellow[1)] AWG 26/27, white[1)]	 20 82 000 0001 20 82 000 0003		
Ha-VIS preLink® assembly tool	20 82 000 9901		

[1)] Packaging with 10 pieces

Identification	Part number	
Cable gland M20x1.5 for pre-terminated Ha-VIS preLink® cable assemblies with slotted seal Cable-sheath 7.2 mm ... 8.0 mm Cable-sheath 4.0 mm ... 6.5 mm 	 19 00 000 5020 19 00 000 5079	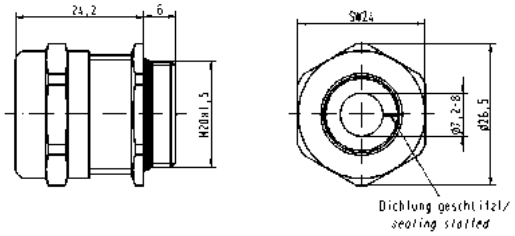
Protection cover for pre-terminated Ha-VIS preLink® cable assemblies Set of 10 pieces 	20 82 000 9915	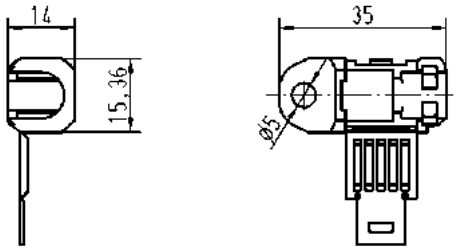
Unlocking tool for Ha-VIS preLink® RJ45 module Set of 5 pieces 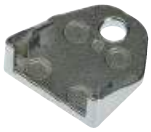	20 82 000 9916	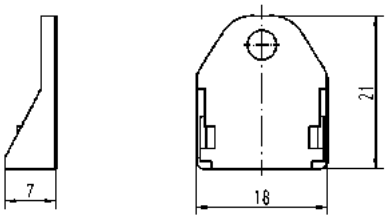
HARTING Assembly tool for Ha-VIS preLink® terminal module 	20 82 000 9901	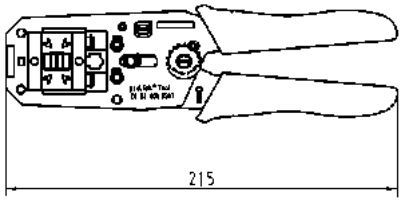

har-port coupler

har-port USB coupler

Advantages

- Compact and well-shaped service interface in a timeless attractive design
- Easy mounting
- Compact and robust design
- Practical accessories

Technical characteristics

Mounting	Screwable in cover plates (thread M22 x 1)
Degree of protection	IP20
Mating cycles	min. 1500
Temperature range	-25 °C ... +70 °C
Housing material	Polyamide

Identification	Part number silver	Part number black	Drawing	Dimensions in mm
***har*-port USB 2.0 coupler**			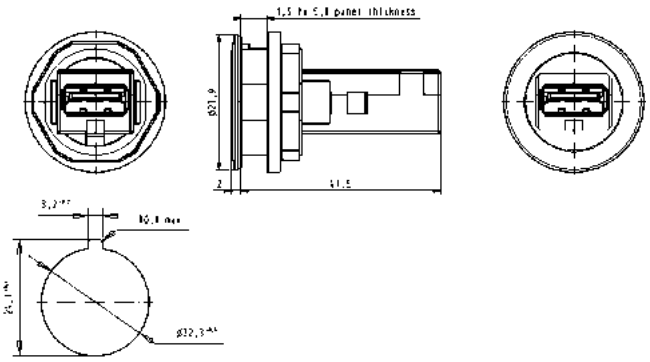	
Type A jack – Type A jack	09 45 452 1901	09 45 452 1903		
***har*-port USB 3.0 coupler**				
Type A jack – Type A jack	09 45 452 1902	09 45 452 1904		
***har*-port USB 2.0 coupler with cable**				
Type A jack – Type A connector			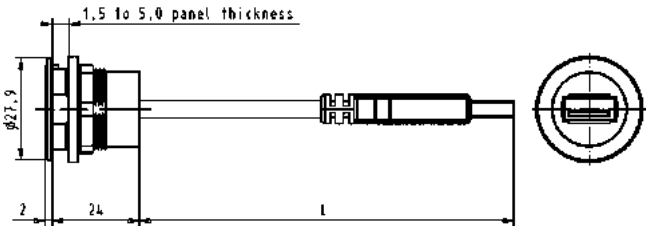	
Length: 0.5 m	09 45 452 1920	09 45 452 1960		
1.0 m	09 45 452 1921	09 45 452 1961		
1.5 m	09 45 452 1922	09 45 452 1962		
2.0 m	09 45 452 1923	09 45 452 1963		
3.0 m	09 45 452 1924	09 45 452 1964		
5.0 m	09 45 452 1925	09 45 452 1965		
Type B jack – Type B connector			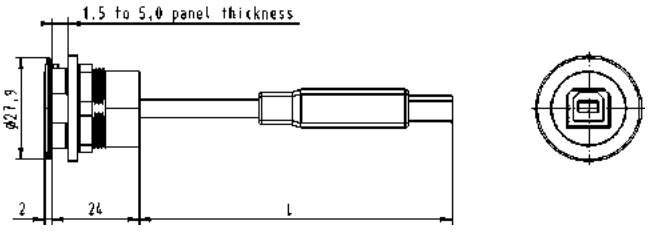	
Length: 0.5 m	09 45 452 1910			
1.0 m	09 45 452 1911			
1.5 m	09 45 452 1912			
2.0 m	09 45 452 1913			
3.0 m	09 45 452 1914			
5.0 m	09 45 452 1915			

har-port USB coupler

Identification	Part number silver	Part number black	Drawing	Dimensions in mm
***har*-port USB 2.0 coupler**				
2 x Type A jack – Type A connector				
Length: 0.5 m	09 45 452 1950		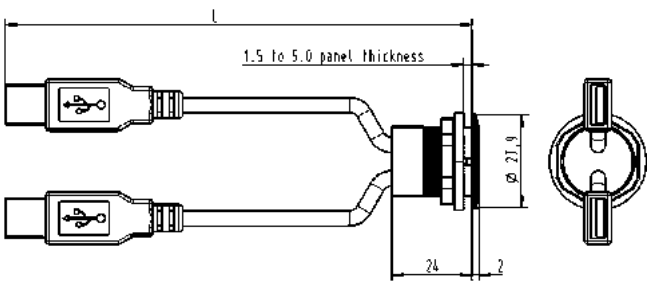	
1.0 m	09 45 452 1951			
1.5 m	09 45 452 1952			
2.0 m	09 45 452 1953			
3.0 m	09 45 452 1954			
5.0 m	09 45 452 1955			
***har*-port USB 3.0 coupler**				
Type A jack – Type A connector				
Length: 0.5 m	09 45 452 1930	09 45 452 1970		
1.0 m	09 45 452 1931	09 45 452 1971		
1.5 m	09 45 452 1932	09 45 452 1972		
2.0 m	09 45 452 1933	09 45 452 1973		
3.0 m	09 45 452 1934	09 45 452 1974		
5.0 m	09 45 452 1935	09 45 452 1975		
***har*-port USB 2.0 coupler**				
Type Mini-B jack – Type A connector				
Length: 0.5 m	09 45 452 1940		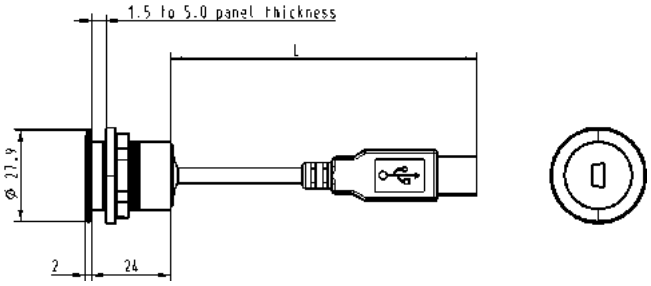	

har-port coupler

har-port RJ45 coupler

Advantages

- Compact and well-shaped service interface in a timeless attractive design
- Easy mounting
- Transmission category 6, performance class E_A, suitable for 1/10 Gigabit Ethernet
- Compact and robust design
- Practical accessories

Technical characteristics

Number of ports	2x RJ45
Transmission performance	Category 6 / class E_A acc. to ISO/IEC 11801:2002, EN 50173-1
Transmission rate	10/100 Mbit/s and 1/10 Gbit/s
Shielding	Fully shielded, 360° shielding contact
Mounting	Screwable in cover plates
Degree of protection	IP20
Mating cycles	min. 750
Temperature range	-25 °C ... +70 °C
Housing material	Polyamide

Identification	Part number silver	Part number black	Drawing	Dimensions in mm
har-port RJ45 Cat. 6 coupler	09 45 452 1560	09 45 452 1561	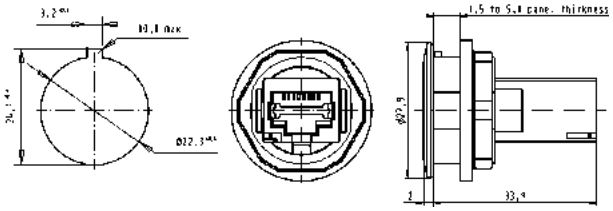	
har-port RJ45 Cat. 6 coupler with cable				
Length: 0.15 m	09 45 452 1500	09 45 452 1530	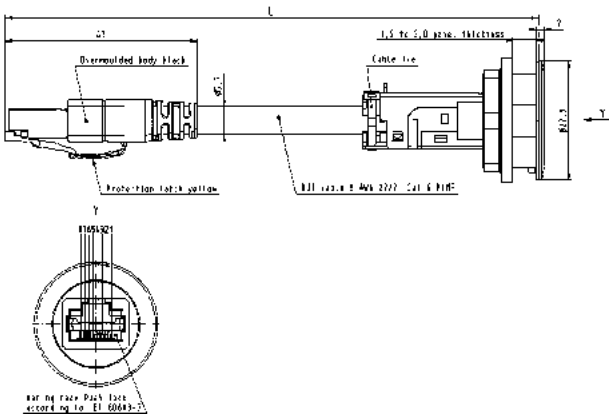	
0.2 m	09 45 452 1501	09 45 452 1531		
0.3 m	09 45 452 1502	09 45 452 1532		
0.5 m	09 45 452 1504	09 45 452 1534		
0.7 m	09 45 452 1506	09 45 452 1536		
1.0 m	09 45 452 1509	09 45 452 1539		
1.5 m	09 45 452 1510	09 45 452 1540		
2.0 m	09 45 452 1511	09 45 452 1541		
2.5 m	09 45 452 1512	09 45 452 1542		
3.0 m	09 45 452 1513	09 45 452 1543		
3.5 m	09 45 452 1514	09 45 452 1544		
4.0 m	09 45 452 1515	09 45 452 1545		
5.0 m	09 45 452 1516	09 45 452 1546		
7.5 m	09 45 452 1517	09 45 452 1547		
10.0 m	09 45 452 1518	09 45 452 1548		
har-port HIFF coupler housing (for all HIFF compatible modules)	09 45 452 0000	09 45 452 0001		

har-port RJ45 coupler

Identification	Part number silver	Drawing	Dimensions in mm
***har*-port** **audio interface** **3.5 mm** stereo phone jack jack to connector		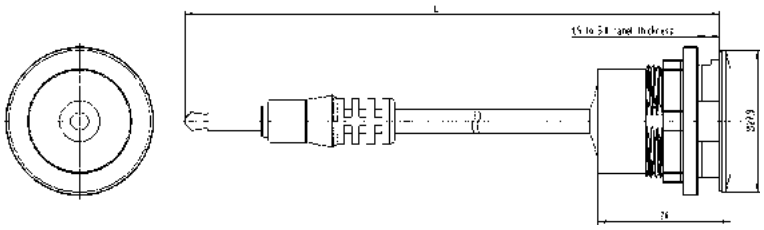	
Length: 1.0 m	09 45 452 1000		
2.0 m	09 45 452 1001		
HDMI **video interface**		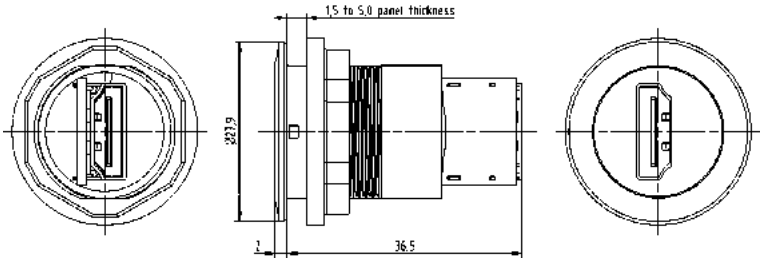	
	09 45 452 1010		

har-port coupler

har-port accessories

Advantages

- Compact and well-shaped service interface in a timeless attractive design
- Easy mounting
- Compact and robust design
- Practical accessories

Technical characteristics

Temperature range	-25 °C ... +70 °C
Housing material	Polyamide

Identification	Part number	Drawing	Dimensions in mm
Accessories			
har-port protection cover IP65 / IP67 black	09 45 502 0000		
har-port sealing cover	09 45 502 0001		
har-port label holder	09 45 502 0002		
har-port label for label holder 09 45 502 0002	09 45 502 0003		
har-port blind cover IP65 / IP67	09 45 502 0004		
har-port protection cover IP65 / IP67 transparent	09 45 502 0005		
har-port protection cover IP65 / IP67 metal	09 45 502 0006		

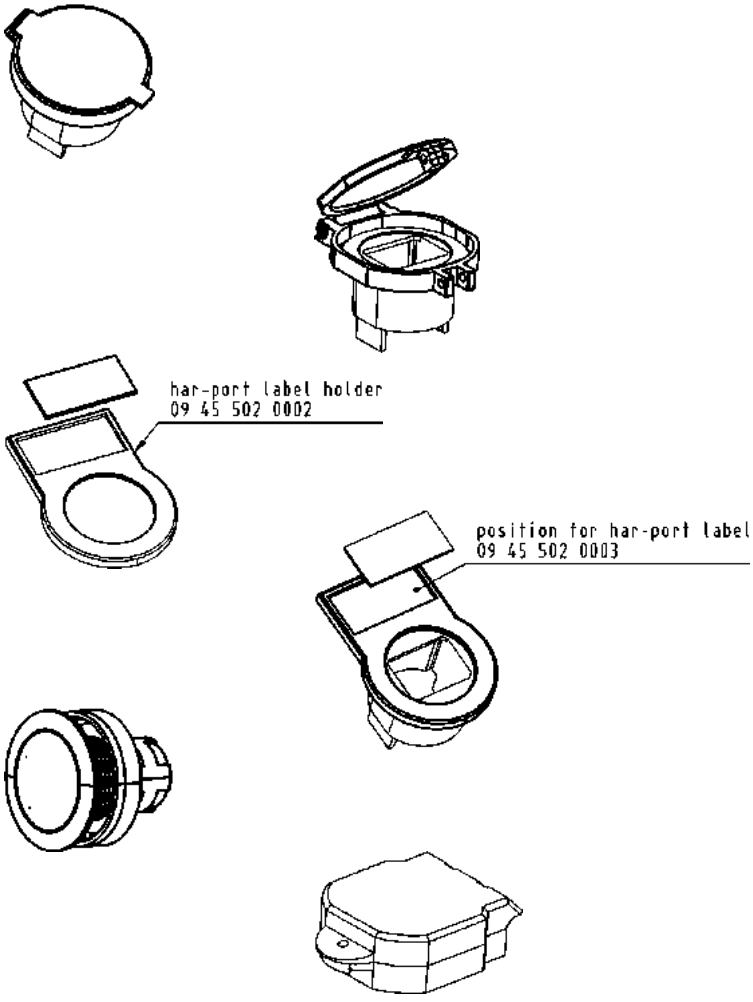

Notes

02. PushPull Connectors

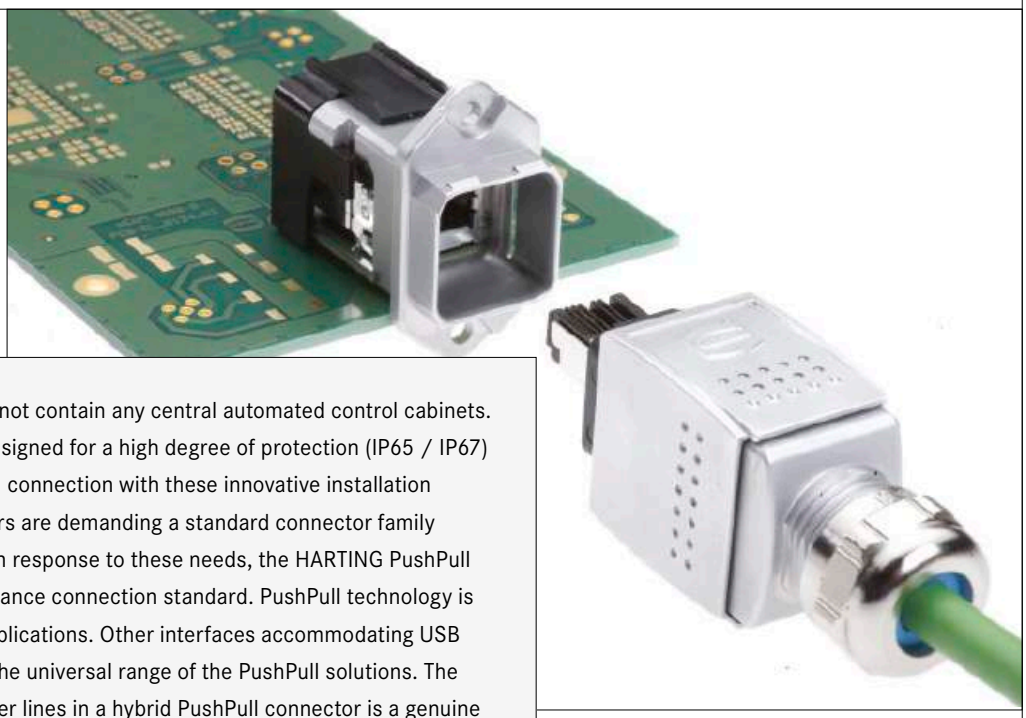

A distributed automation system does not contain any central automated control cabinets. Controls, sensors and actuators are designed for a high degree of protection (IP65 / IP67) and are installed directly in the field. In connection with these innovative installation concepts with distributed devices, users are demanding a standard connector family that is compatible with all interfaces. In response to these needs, the HARTING PushPull series has set the respective new appliance connection standard. PushPull technology is available for data, signal and power applications. Other interfaces accommodating USB or fiber optics (LC, SCRJ) supplement the universal range of the PushPull solutions. The integration of communication and power lines in a hybrid PushPull connector is a genuine trend-setting advance. In view of these strengths, the PushPull container has become the standard for current and future appliance interfaces. The German automotive industry, for example, has opted for the implementation of the PushPull connector family.

Application profile:

CONNECTION TYPE		ENVIRONMENT		APPLICATION						
Board to Board	Cable/ Wire to Board	IP20	IP65 / IP67	Data	Signal	Power	high performance			
							Data transfer rate	Shielding	Number of contacts, contact density	Voltage, working current
	●		●	●	●	●	●	●		●

Cable termination

Han-Quick Lock® — *IDC HARAX®* — *Crimp*

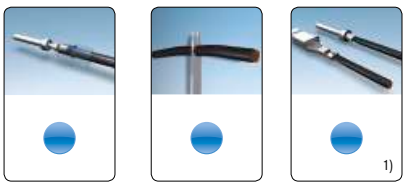

Screw — *Cage clamp* — *Axial screw*

PCB termination

THT — *SMC* — *SMT*

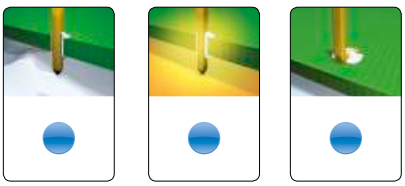

Press-in

Application standard

PROFINET — PROFIBUS — ISO IEC 24702 — EtherCAT Technology Group — ETHERNET POWERLINK

Housing integration

Separate housing — *Integrated housing*

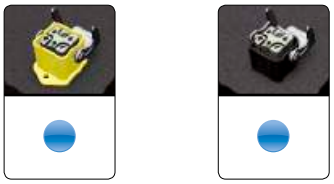

[1] Piercing contacts

Contents

Page

Introduction PushPull termination technology **02.02**

HARTING PushPull type acc. to IEC 61 076-3-106 variant 4

- HARTING PushPull – housing bulkhead mounting for device integration **02.04**
- HARTING PushPull RJ45 . . . . . **02.05**
- HARTING PushPull LC duplex **02.11**
- HARTING PushPull Hybrid **02.17**
- HARTING PushPull Signal **02.21**
- HARTING PushPull USB **02.23**
- HARTING PushPull Power, 4-poles, 48 V (12 A) **02.26**
- HARTING PushPull Power, 3-poles, 250 V (16 A) **02.29**
- HARTING PushPull Power – Tooling and accessories **02.30**

Han® PushPull type acc. to IEC 61 076-3-117 variant 14

- Han® PushPull RJ45 . . . . . **02.33**
- Han® PushPull SCRJ and tooling **02.48**
- Han® PushPull Signal **02.58**
- Han® PushPull Power 4/0, 5-poles, 230/400 V (16 A) **02.61**
- Han® PushPull Power 4/0 – Contacts and tooling **02.68**
- Han® PushPull Power L 4/0, 5-poles, 24 V (16 A) **02.70**

02. PushPull Connectors

The PushPull connector housing is a function container with degree of protection IP65 / IP67 and is available in two standardized housing sizes. These containers are equipped with standard RJ45, FOC or power contacts for operation at 5 x 16 A, depending on application requirements. The PushPull connector can be delivered either as plastic, or as metal variant, depending on the installation environment.

THE PushPull PRINCIPLE

PushPull connector applications combine two basic advantages:

1. Simple operation
2. Safe and vibration resistant sealed IP65 / IP67 connection.

The innovative PushPull lock mechanism dispenses with the need for a latching bracket. The connector can be inserted with one hand, minimum force and an audible click for safe operation. The connection can be removed again just as easily for service work.

COPPER, FOC AND POWER – IN THE SAME DESIGN

HARTING offers two series of the PushPull connector system, which differ in terms of their outer dimensions and module inserts.

Han® PushPull (IEC 61 076-3-117 VARIANT 14)

This series represents the standard PROFINET device interface for the IP67 environment of the German automobile manufacturing industry.

The connector is available as metal and as plastic version. The RJ45 module for copper conductors and the SCRJ module for FOCs are available as data connectors. The RJ45 variant is realized by means of the RJ Industrial module equipped with *HARAX*® quick connection technology. The power module which is installed in the same container can be assembled on-site, either with crimp contacts or with innovative Quick Lock® technology in order to wire the distributed field devices to 230/400 V (16 A) power. This 5-pole connector enables the transfer of two independent 24 V control

circuits with functional ground, or the transfer of a three-phase voltage of 400 V (16 A).

HARTING PushPull (IEC 61 076-3-106 VARIANT 4)

This extremely compact and space-saving series provides an Ethernet appliance connection with degree of protection IP65 / IP67 that requires no more installation space than a M12 connector. The RJ45 variant for copper conductors and the LC variant for FOCs are available as modules for data connectors. The RJ45 variant is realized by means of *HARAX*® quick connection technology as used with HARTING RJ Industrial®. The 4-pole module for 48 V (12 A) or the 3-pole module for 250 V (16 A) can be used to supply power to the distributed field devices.

HARTING PushPull HYBRID

The migration from Fieldbus to Ethernet within communication technology has simplified machine installation options. This simplification is attained by combining the data and the 24 V power lines in a single hybrid cable with hybrid connector, in connection with the spatial requirements of an M12 connector. The HARTING PushPull Hybrid offers trend-setting connection technology for this new method of machine installation.

The PushPull Hybrid reduces everything by half: the number of connection points and cables, and spatial requirements for the connection technology.

The PushPull Hybrid makes everything easier: machine installation, the wiring of connectors and safe insertion.

APPLIANCE INTEGRATION:

In order to support the implementation of appliances with degree of protection IP65 / IP67, HARTING offers panel feed-through devices with integrated couplings and female contact modules for direct mounting on PCBs.

HARTING PushPull
ONE CONCEPT FOR DATA, SIGNAL AND POWER

The internationally standardized PushPull connector represents the latest generation of appliance connection technology with high degree of protection IP65 / IP67, easy insertion and snap-action engagement with audible click.

The PushPull housing family is designed for the integration of a wide range of contact inserts for data, signal and power lines.

INSTALLATION IN PLANTS
WITH Han® PushPull CONNECTORS:

- The standard for PROFINET communication
- One housing for the electrical and optical data transfer and for power supply
- Plastic or metal housing variants

INSTALLATION IN MACHINES
WITH HARTING PushPull HYBRID CONNECTORS:

- Combined data lines and appliance power supply up to 5 A in the same connector
- Compact size (comparable with M12)

POWER SUPPLY TO DISTRIBUTED DEVICES
USING PushPull CONNECTORS:

- Variant 4: 48 V (12 A), 4-pole or 250 V (16 A), 3-pole
- Variant 14: 400 V (12 A) 5-pole, or 24 V (16 A) 5-pole
- Latest connection technology QuickLock® for on-site assembly without special auxiliary tools

HARTING PushPull

HARTING PushPull Technology acc. to IEC 61076-3-106 variant 4
housing bulkhead mounting for device integration of RJ45-, USB- and Power-jacks

Advantages

- PushPull housing bulkhead mounting with HARTING PushPull technology
- Compact, space-saving design for device integration of RJ45-, USB-, Signal- or Power-pcb female

Housing bulkhead mounting EasyInstall

- for simple device integration round panel cut out

Housing bulkhead mounting Compact

- high packing density (spacing 27 x 21 mm)

Technical characteristics

Locking	PushPull Technology acc. to IEC 61076-3-106 variant 4
Shielding	fully shielded, 360° shielding contact
Mating cycles	min. 750
Degree of protection	IP65 / IP67
Temperature range	-40 °C … +70 °C
Housing material	Plastic, black Zinc die-cast, shining
Flammability acc. to UL 94	V0
	UL approval (E102079)

Identification	Part number	Drawing	Dimensions in mm
Components device side			
Housing bulkhead mounting – EasyInstall			
with integrated seal board drillings for M3			
without fixing clip	09 45 545 0030[1] 09 45 595 0030[2][4]	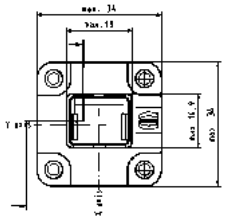	
with fixing clip	09 45 545 0031[3] 09 45 595 0031[3][4]	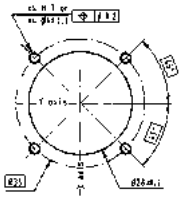	Panel cut out
with fixing clip, for all HIFF compatible modules	09 45 545 0032		
Housing bulkhead mounting – Compact			
Board drillings for M2.5			
without fixing clip (incl. flat seal)	09 45 545 0023[2]	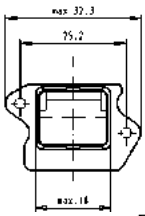	
without fixing clip (with integrated seal)	09 45 545 0033[2]		
with fixing clip (incl. flat seal)	09 45 545 0021[3]	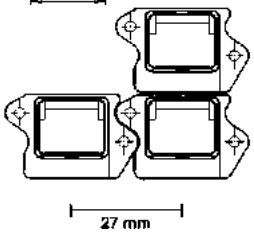	
with fixing clip (with integrated seal)	09 45 545 0029[3]		
with fixing clip (with integrated seal) for vertical RJ jack 09 45 551 1103	09 45 545 0027		
with fixing clip, for all HIFF compatible modules	09 45 545 0028		

[1] suitable RJ45 jacks: 09 45 551 1100 / … 1110 / … 1102 / … 1103 / … 1130 / … 1530
[2] suitable RJ45 jacks: 09 45 551 1100 / … 1110 / … 1102 / … 1130 / … 1530
[3] suitable RJ45 jacks: 09 45 551 1100 / … 1110 / … 1102
[4] Metal version

HARTING PushPull RJ45

HARTING PushPull Technology acc. to IEC 61076-3-106 variant 4
RJ45 jacks and accessories

Advantages

- HARTING PushPull technology
- Low-profile jacks for space-saving PCB integration
- Category of transmission Cat. 5
- Suitable for PoE (IEEE 802.3af) and PoE+ (IEEE 802.3at)

Technical characteristics

Locking	PushPull Technology acc. to IEC 61076-3-106 variant 4
Transmission rate	10/100/1000 Mbit/s
Shielding	fully shielded, 360° shielding contact
Mating cycles	min. 750
Degree of protection	IP65 / IP67
Temperature range	-40 °C … +70 °C
Housing material	Plastic, black
Flammability acc. to UL 94	V0
	UL approval (E102079)

Identification	Part number	Drawing	Dimensions in mm
Components device side			pcb layout
RJ45 jacks Cat. 5			
Solder variant SMD, 90° angled	09 45 551 1100[1] 09 45 551 1110[2]	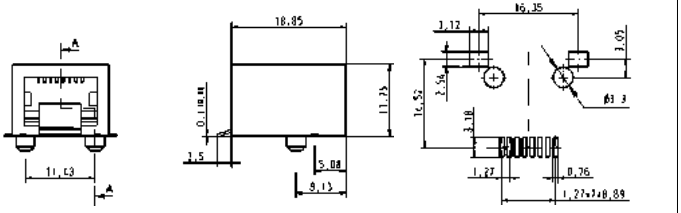	
Solder variant overmolded, 90° angled	09 45 551 1102[1]	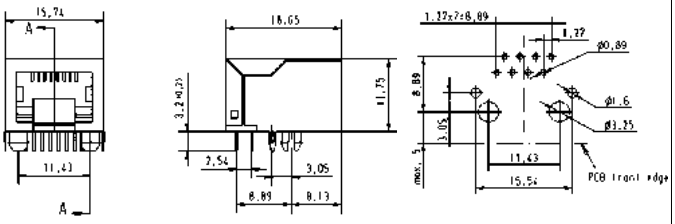	
Solder variant overmolded, straight	09 45 551 1103[3]	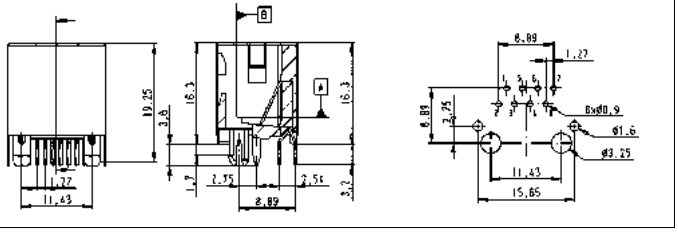	

[1] Packaging: Blister à 120 pieces
[2] Packaging: Tape & Reel à 130 pieces
[3] Packaging: Tape & Reel à 80 pieces

HARTING PushPull RJ45

HARTING RJ Industrial® RJ45 jacks with transformer

Advantages

- Compact design
- Integrated optical fibres
- Excellent EMC behaviour due to integrated transformers and filters for 10/100 Mbit or 1 Gbit Ethernet
- SMC compatible
- Versions from 10/100 Mbit up to 10 Gbit Ethernet and PoE
- Usable for IP65 / IP67 device integration with HARTING PushPull and Han® 3 A RJ45

Technical characteristics

Mating face	RJ45 acc. to IEC 60603-7
Number of contacts	8
Degree of protection	IP20
Rated voltage	30 V DC
Rated current	8 mA DC
Mating cycles	min. 750
Temperature range	-25 °C … +70 °C

Identification	Part number	Drawing	Dimensions in mm
Components device side			
RJ45 jack with transformer (low profile)			
90° angled, THT 10/100 Mbit Ethernet Schematic:	09 45 551 1150[1)]	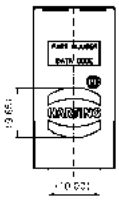	
10/100 Mbit Ethernet and PoE	09 45 551 1151[1)]	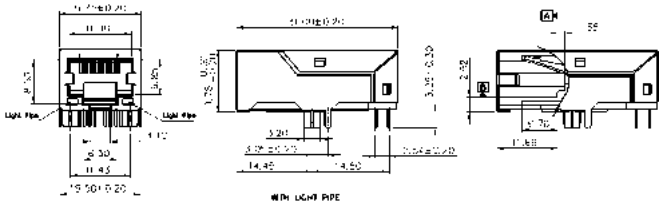	
90° angled, THT 1 Gbit Ethernet Schematic:	09 45 551 1540[1)]		
1 Gbit Ethernet and PoE	09 45 551 1541[1)]	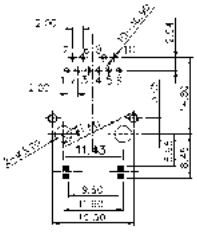	
		Customer specific versions on request	

[1)] Packaging: Blister à 56 pieces

HARTING PushPull RJ45

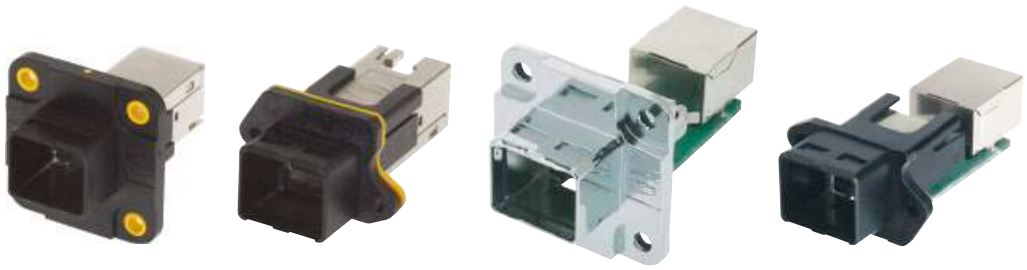

HARTING PushPull Technology acc. to IEC 61076-3-106 variant 4
RJ45-panel feed-throughs and accessories

Advantages

- Small, space-saving PushPull Interfaces in IP65 / IP67
- Easy handling of RJ45 patch cords in switch cabinets or sets
- Mounting to casings

Technical characteristics

Locking	PushPull Technology acc. to IEC 61076-3-106 variant 4
Transmission rate cat. 5 versions	10/100/1000 Mbit/s
Transmission rate cat. 6 versions	10/100 Mbit/s / 1/10 Gbit/s
Shielding	fully shielded, 360° shielding contact
Mating cycles	min. 750
Degree of protection	IP65 / IP67
Temperature range	-40 °C … +70 °C
Housing material	Plastic, black Zinc die-cast, shining
Flammability acc. to UL 94	V0 UL approval (E102079)

Identification	Part number	Drawing	Dimensions in mm
Panel feed-through set category of transmission Cat. 5			
incl. housing bulkhead mounting EasyInstall with integrated seal, 2 x RJ45-jack board drillings for M3	09 45 245 1130 09 45 295 1130 (metal version)		
incl. housing bulkhead mounting Compact, flat seal, 2 x RJ45-jack board drillings for M2.5	09 45 245 1102		
Panel feed-through set category of transmission Cat. 6			
incl. housing bulkhead mounting EasyInstall with integrated seal, 2 x RJ45-jack board drillings for M3	09 45 245 1590		
incl. housing bulkhead mounting Compact, with integrated seal, 2 x RJ45-jack	09 45 245 1560		

Panel cut outs see page 02.04

HARTING PushPull RJ45

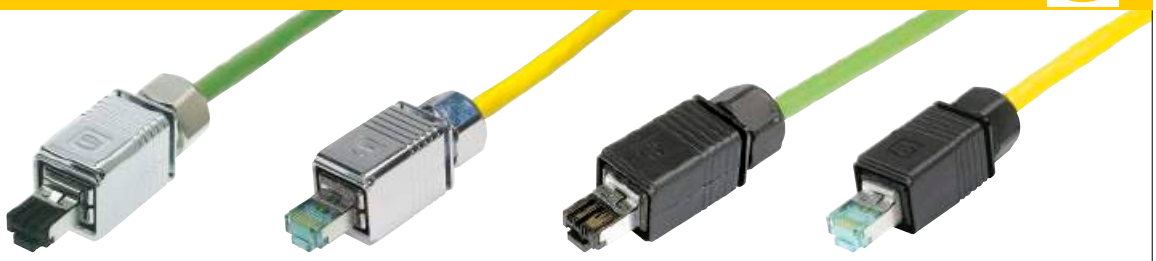

HARTING PushPull Technology acc. to IEC 61076-3-106 variant 4
RJ45-connector

Advantages

- Ethernet connector based on RJ45
- Fully shielded, 360° shielding contact
- Field-assembly connector
  with IDC contacts (Cat. 5 versions)
  or piercing contacts (Cat. 6_A versions)

Technical characteristics

Locking	PushPull Technology acc. to IEC 61076-3-106 variant 4
Degree of protection	IP65 / IP67
Mating face	RJ45 acc. to IEC 60603-7
Cable diameter	4.9 ... 8.6 mm
Termination cross section	
Cat. 5	AWG 24/7 ... AWG 22/7 (stranded) AWG 23/1 ... AWG 22/1 (solid)
Cat. 6_A	AWG 24/7 ... AWG 28/7 (stranded)
Mating cycles	min. 750
Temperature range	-40 °C … +70 °C
Housing material	Plastic, black Zinc die-cast, shining
Flammability acc. to UL 94	V0
	UL approval (E102079)

Identification	Part number	Drawing	Dimensions in mm
Connector, 4-poles Cat. 5 incl. housing with RJ45 connector, shielding and cable gland	09 45 145 1100 09 45 195 1100 (metal version)	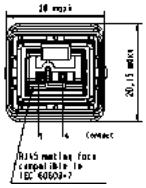	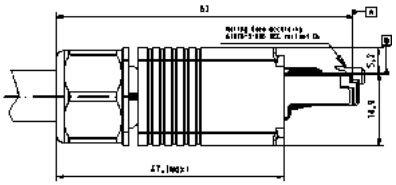
Connector, 8-poles Cat. 6_A incl. housing with RJ45 connector, shielding and cable gland	09 45 145 1520 09 45 145 1520 XL[1] 09 45 195 1520 (metal version)	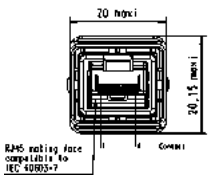	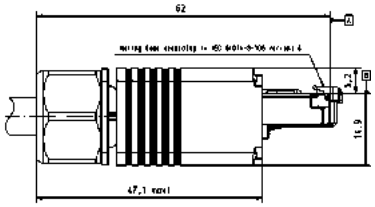
suitable assembly tool	09 45 800 0520		

[1] Packaging with 100 sets

HARTING PushPull RJ45

HARTING PushPull RJ45 – bulkhead

Advantages

- Small, space-saving PushPull Interfaces in IP65 / IP67
- Easy connection of PushPull RJ45 system cords
- Screwable with 2 x M3 screws

Technical characteristics

Locking	PushPull Technology acc. to IEC 61 076-3-106 variant 4
Number of contacts	8
Transmission category	Cat. 6, performance class E_A, suitable for 1/10 Gigabit Ethernet
Transmission rate	10/100 Mbit/s / 1/10 Gbit/s
Shielding	fully shielded, 360° shielding contact
Mating cycles	min. 750
Degree of protection	IP65 / IP67
Temperature range	-40 °C … +70 °C
Housing material	Plastic, black
Flammability acc. to UL 94	V0
	UL approval (E102079)

Identification	Part number	Drawing	Dimensions in mm
HARTING PushPull RJ45 – bulkhead	09 45 345 1560		

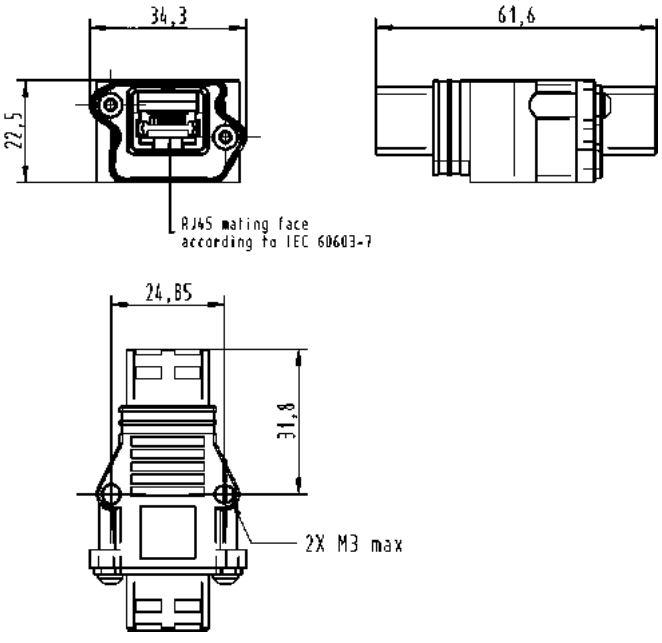

HARTING PushPull RJ45

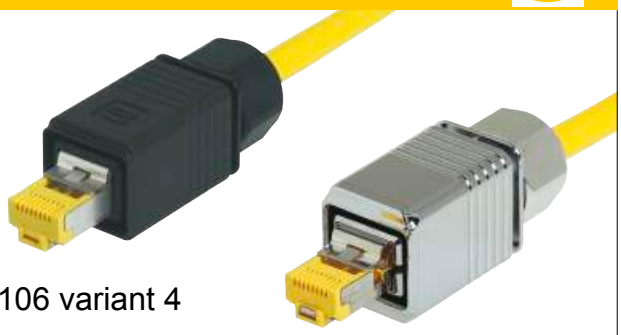

HARTING PushPull Technology acc. to IEC 61076-3-106 variant 4
RJ45-connector

Advantages

- Ethernet connector based on RJ45
- Fully shielded, 360° shielding contact
- Field-assembly connector with IDC contacts
- Category of transmission: Cat. 6 / class E_A suitable for 1/10 Gbit Ethernet

Technical characteristics

Locking	PushPull Technology acc. to IEC 61076-3-106 variant 4
Mating face	RJ45 acc. to IEC 60603-7
Cable diameter	4.9 ... 8.6 mm
Termination cross section	AWG 27/7 ... AWG 22/7 (stranded) AWG 24/1 ... AWG 22/1 (solid)
Conductor diameter	max. 1.6 mm (incl. insulation)
Mating cycles	min. 750
Degree of protection	IP65 / IP67
Temperature range	-40 °C … +70 °C
Housing material	Plastic, black Zinc die-cast, shining
Flammability acc. to UL 94	V0
	UL approval (E102079)

Identification	Part number
Connector, 8-poles Cat. 6 incl. housing with RJ45 connector, shielding and cable gland	09 45 145 1560 09 45 145 1560 XL[1] 09 45 195 1560 (metal version)
Colour clips for colour coding the HARTING PushPull connectors	
White	09 45 840 0011
Yellow	09 45 840 0013
Red	09 45 840 0017
Blue	09 45 840 0018
Green	09 45 840 0019

Drawing — Dimensions in mm

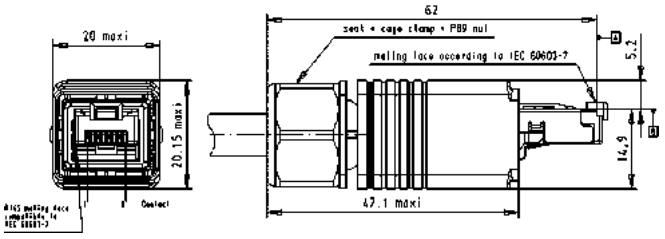

[1] Packaging with 100 sets

HARTING PushPull LC duplex

HARTING PushPull type acc. to IEC 61 076-3-106 variant 4
LC duplex panel feed-through and connector

Advantages

- Optical PushPull connector based on LC with small form factor (requires 50 % compared to SC and ST)
- EasyInstall and Compact panel feed-through for simple device integration
- Optical module with inserts acc. to IEC 61 754-20
- One-piece LC body assures high mechanical stability
- A & B parts identification for Duplex according TIA 568 standard

Technical characteristics

Locking	PushPull Technology acc. to IEC 61 076-3-106 variant 4
Degree of protection	IP65 / IP67
Mating face	LC acc. to IEC 61 754-20
Cable diameter	5.8 ... 7.2 mm
Mating cycles	min. 200
Temperature range	-40 °C … +70 °C
Housing material	Plastic, black Zinc die-cast, shining
Flammability acc. to UL 94	V0

Identification	Part number	Drawing	Dimensions in mm
HARTING PushPull LC duplex			
Cable side			
Multimode GOF	09 57 402 0500 000		
	09 57 409 0500 000 (metal version)		
Singlemode GOF	09 57 402 0501 000		
	09 57 409 0501 000 (metal version)		
Device side EasyInstall version			
Multimode GOF	09 57 441 0500 000		
	09 57 468 0500 000 (metal version)		
Singlemode GOF	09 57 441 0501 000		
	09 57 468 0501 000 (metal version)		
Device side Compact version			
Multimode GOF	09 57 442 0502 001		
Singlemode GOF	09 57 442 0503 001		

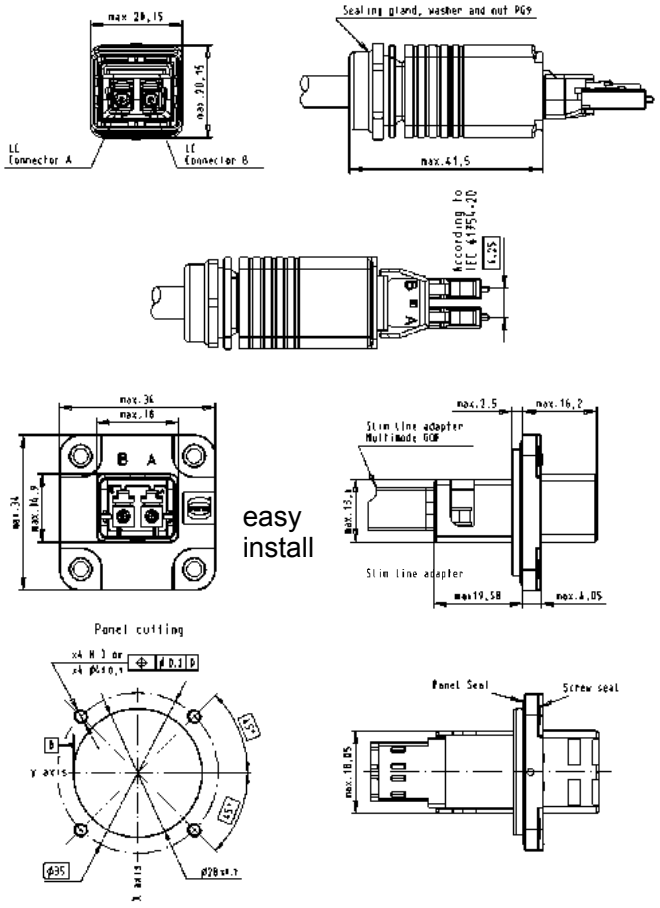

HARTING PushPull LC duplex

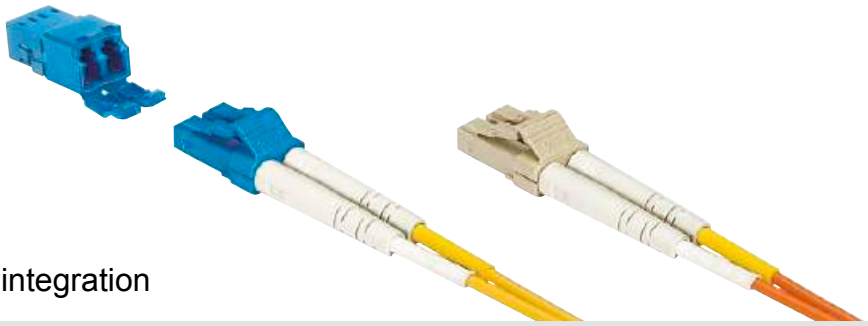

LC duplex IP20 adapter for device integration

Advantages

- Small form factor requires 50 % (compared to SC and ST)
- Compact, space-saving design
- High packing density
- A & B parts identification according TIA 568 standard
- Complement adapter for IP67 connector on device side

Technical characteristics

Degree of protection	IP20
Mating interface	LC duplex with two fibres
Temperature range	-40 °C … +70 °C

Identification	Part number
Device side	
Adapter	
Multimode GOF	09 57 400 0003 000
Singlemode GOF	09 57 400 0004 000
Connector LC duplex	
Multimode GOF	09 57 400 0001 000
Singlemode GOF	09 57 400 0002 000

Drawing — Dimensions in mm

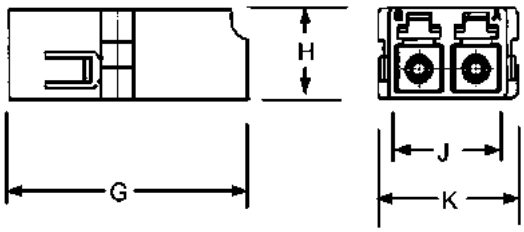

	min.	max.
G	26.60	26.80
H	9.35	9.45
J	12.80	12.90
K	15.24	15.34

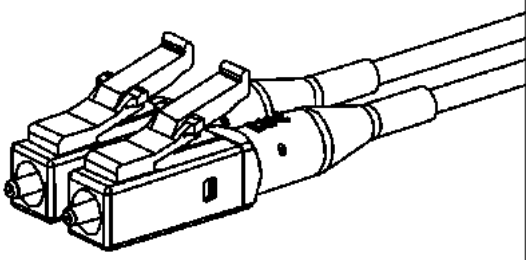

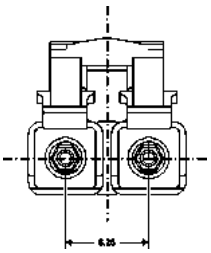

HARTING PushPull LC duplex

Identification	Part number	Drawing	Dimensions in mm
Fibre optic cable, double ended, multi mode, 62.5 µm overmolded		double ended	
Length: a = 1 m	33 58 231 0010 016	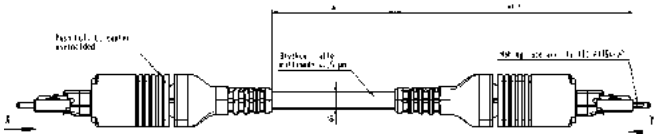	
a = 5 m	33 58 231 0050 016		
a = 10 m	33 58 231 0100 016	a = length	
a = 20 m	33 58 231 0200 016		
a = 40 m	33 58 231 0400 016	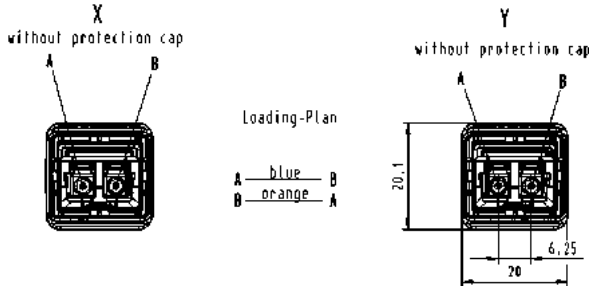	
a = 50 m	33 58 231 0500 016		
a = 60 m	33 58 231 0600 016		
a = 100 m	33 58 231 1000 016		
a = 300 m	33 58 231 3000 016		
Fibre optic breakout cable, multi mode, 62.5 µm		PUR jacket 2-fibre multi mode 62.5 µm Outer diameter: 7 mm Min. bending radius: Installation: 10.5 cm Operating: 7.0 cm	
Length: 10 m	33 58 751 0100 001		
Length: 20 m	33 58 751 0200 001		
Length: 100 m	33 58 751 1000 001		

Further cable lengths are available on request

HARTING PushPull LC duplex

Identification	Part number	Drawing	Dimensions in mm
Fibre optic cable, double ended, multi mode, 50 µm overmolded		double ended	
Length: a = 1 m	33 58 231 0010 017	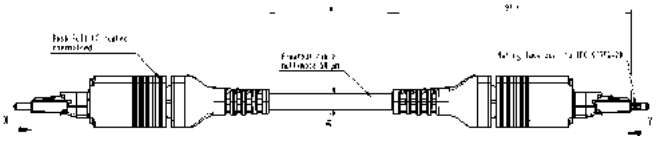	
a = 5 m	33 58 231 0050 017		
a = 10 m	33 58 231 0100 017	a = length	
a = 20 m	33 58 231 0200 017		
a = 40 m	33 58 231 0400 017		
a = 50 m	33 58 231 0500 017		
a = 60 m	33 58 231 0600 017		
a = 100 m	33 58 231 1000 017		
a = 300 m	33 58 231 3000 017		
Fibre optic breakout cable, multi mode			
Length: 10 m	33 58 751 0100 003		PUR jacket 2-fibre multi mode 50 µm Outer diameter: 6.5 mm Min. bending radius: Installation: 10.4 cm Operating: 5.2 cm
Length: 20 m	33 58 751 0200 003		
Length: 100 m	33 58 751 1000 003		

Further cable lengths are available on request

HARTING PushPull LC duplex

Identification	Part number	Drawing	Dimensions in mm
Fibre optic cable, double ended, single mode overmolded		double ended	
Length: a = 1 m	33 58 231 0010 015	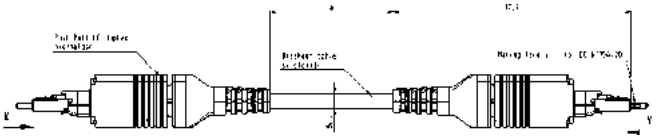	
a = 5 m	33 58 231 0050 015		
a = 10 m	33 58 231 0100 015	a = length	
a = 20 m	33 58 231 0200 015		
a = 40 m	33 58 231 0400 015	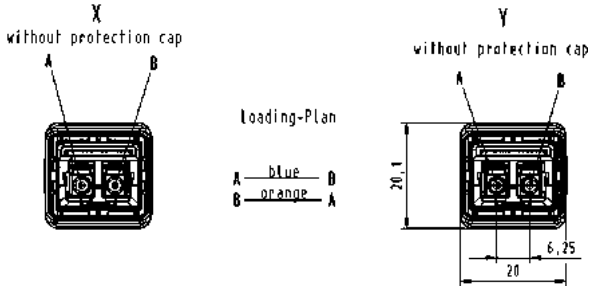	
a = 50 m	33 58 231 0500 015		
a = 60 m	33 58 231 0600 015		
a = 100 m	33 58 231 1000 015		
a = 300 m	33 58 231 3000 015		
Fibre optic breakout cable, single mode			
Length: 10 m	33 58 751 0100 002		
Length: 20 m	33 58 751 0200 002		
Length: 100 m	33 58 751 1000 002		

PUR jacket
2-fibre single mode
Outer diameter: 6.5 mm
Min. bending radius:
Installation: 10.4 cm
Operating: 5.2 cm

Further cable lengths are available on request

Notes

HARTING PushPull Hybrid

HARTING PushPull Hybrid
type acc. to IEC 61 076-3-106 variant 4

Advantages

HARTING PushPull Hybrid

In the future all new machine generations will be equipped with Fast Ethernet, no matter if PROFINET, Ethernet/IP, Powerlink, Ethercat, Varan or other Ethernetprofiles.

With the change of the communication technology also the possibility is offered of simplifying the machine installation and of introducing an innovative Hybrid installation concept. This simplification will unite by data and 24 V (5 A)-supply in a Hybrid cable, at least with the space requirement of a M12-connector.

For this new installation solution HARTING with the HARTING PushPull Hybrid offers the trend-setting installation technology.

Everything is halved: the number of pluggings, the number of cables and the space requirement for the connection technology. Everything becomes simpler: the installation, attaching and safe plugging.

The Hybrid connectors were developed particular under the criteria of simple attaching in the field and the particular safe data communication with the patented omega screen concept. As contacts D-Sub and HDD Sub contacts worked world-wide are used. This socket pin contact system ensures highest reliability and optimal shock and vibration stability.

With the optional available coding pins 6 different codings can be realized.

Technical characteristics

Advantages

- Compact, space-saving design
- Very compact housing with high degree of protection
- Polarisation with nose
- Sixfold codable

Typical application areas

- Factory and building automation
- Industrial electronics
- Telecommunication and wireless networks
- Transportation
- Industrial monitoring and camera systems
- Lighting and display technology
- Access control systems

Recommended pin assignment

- Power contacts

Contact	Function	Conductor colour
1	V +	Red
2	Ground	Brown
3	V + (switched)	Yellow

- Data contacts

Contact	Signal	Function	Conductor colour
4	RD –	Receiver Data –	Blue
5	RD +	Receiver Data +	White
6	TD –	Transmission Data –	Orange
7	TD +	Transmission Data +	Yellow

Structure Hybrid cable
Data: 4x AWG26/7
Power: 3x AWG20/7

HARTING PushPull Hybrid

HARTING PushPull Hybrid, type acc. to IEC 61 076-3-106 variant 4
device side

Advantages

- Combined data- and power-supply up to 5 A/48 V included to one connector
- HARTING PushPull technology
- Compact design
- High packing density
- Sixfold codable
- Suitable for all Fast-Ethernet variants

Technical characteristics

Locking	PushPull Technology acc. to IEC 61 076-3-106 variant 4
Degree of protection	IP65 / IP67
Termination	Solder pins
Transmission performance	Category 5 / Class D up to 100 MHz acc. to ISO/IEC 11 801:2002, EN ISO 50 173-1
Transmission rate	10 / 100 Mbit/s
Number of contacts	Data: 4, shielded (Ethernet) Power: 3, (5 A / 48 V)
Housing material	Plastic, black
Flammability acc. to UL 94	V0

Identification	Part number	Drawing	Dimensions in mm
Components device side			
Set straight HARTING PushPull Hybrid housing bulkhead mounting and pcbs female shielded, IP65 / IP67, black, 180° straight	09 45 245 1300	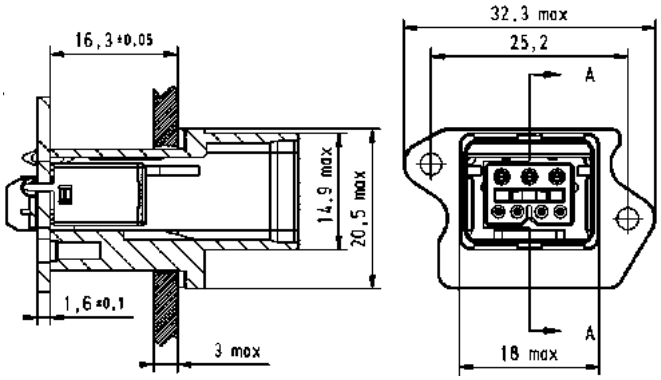	
Set angled HARTING PushPull Hybrid housing bulkhead mounting and pcbs female shielded, IP65 / IP67, black, 90° angled	09 45 245 1310		
Female insert PCB jack shielded 180° straight PCB jack shielded 90° angled	09 45 545 1300 09 45 545 1305	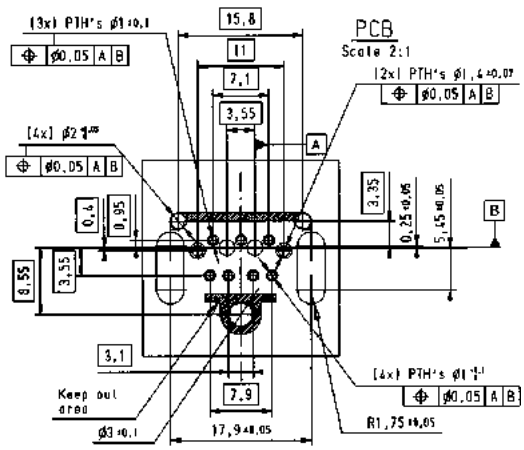	
Housing bulkhead mounting for female insert straight for female insert angled	09 45 545 1320 09 45 545 1325		
Panel feed-through 1 x Hybrid female IP65 / IP67 on 1 x RJ45 female and 3 pcb clamps, board drillings for M2.5	09 45 245 1320		

HARTING PushPull Hybrid

HARTING PushPull Hybrid, type acc. to IEC 61 076-3-106 variant 4
Hybrid connector

Advantages

- Combined data- and power-supply up to 5 A / 48 V included to one connector
- HARTING PushPull technology
- Compact design
- High packing density
- Sixfold condable
- Suitable for all Fast-Ethernet variants

Technical characteristics

Locking	PushPull Technology acc. to IEC 61 076-3-106 variant 4
Degree of protection	IP65 / IP67
Termination	Crimp
Cable diameter	AWG 26 for Ethernet AWG 20 for Power
Transmission performance	Category 5 / Class D up to 100 MHz acc. to ISO/IEC 11 801:2002, EN ISO 50 173-1
Number of contacts	Data: 4, shielded (Ethernet) Power: 3, (5 A / 48 V)
Housing material	Plastic, black
Flammability acc. to UL 94	V0

Identification	Part number	Drawing	Dimensions in mm
Connector HARTING PushPull Hybrid connector, IP65/ 67, black, with cable gland and crimp contacts		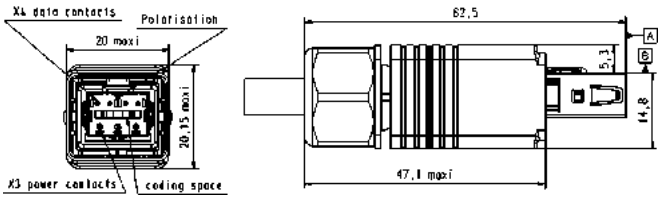	
straight	09 45 145 1300		
Accessories – Coding pin set to avoid accidental incorrect mating a coding system is required. This coding pins are inserted without loss of contact.	09 45 845 1300		
Tools			
Crimping tool for data contacts	09 99 000 0535		
Crimping tool for power contacts	09 99 000 0175		
Insertion and removal tool			
for data contacts	09 99 000 0513		
for power contacts	09 99 000 0171		

HARTING PushPull Hybrid

HARTING PushPull Hybrid, type acc. to IEC 61 076-3-106 variant 4
overmoulded Hybrid system cables

Advantages

- Combined data- and power-supply up to 5 A / 48 V included to one connector
- HARTING PushPull technology
- Robust design, suitable for industrial applications
- High packing density
- Sixfold codable
- Suitable for all Fast-Ethernet variants

Technical characteristics

Cable construction:	Twisted Pair shielded + 3 Power cables
Core structure	Data: 4x AWG 26/7 Power: 3x AWG 20/7
Transmission performance	Category 5 / Class D up to 100 MHz acc. to ISO/IEC 11 801:2002, EN ISO 50 173-1
Sheath material	FRNC
Cable- outer diameter	ø (7.0 ±0.4) mm
Shielding	Shielding foil and shielding braid
Temperature range	-40 °C … +80 °C
Colour	black

Identification		Part number	Drawing	Dimensions in mm
System cables **2x HARTING PushPull Hybrid**				
Length	0.5 m	09 47 616 1005		
	0.8 m	09 47 616 1008		
	1 m	09 47 616 1010		
	2 m	09 47 616 1020		
	3 m	09 47 616 1030		
	5 m	09 47 616 1050		
	10 m	09 47 616 1100		
	20 m	09 47 616 1200		
Hybrid cable				
ring	20 m	09 45 600 0331		
ring	50 m	09 45 600 0341		
ring	100 m	09 45 600 0301		
reel	500 m	09 45 600 0321		

Structure Hybrid cable

HARTING PushPull Signal

HARTING PushPull, type acc. to IEC 61 076-3-106 variant 4
10-poles 50 V / 5 A

Features

- HARTING PushPull technology
- For the transmission of analog, low voltage and bus signals
- Fully shielded
- 10 contacts
- Touch-proof
- Easy and fast cable installation

Technical characteristics

Locking	PushPull technology acc. to IEC 61 076-3-106 variant 4
Degree of protection	IP65 / IP67
Mating face	acc. to IEC/PAS 61 076-3-11x
Number of contacts	10
Electrical data acc. to DIN EN 61 984	5 A 50 V 1.5 kV 3
Contact resistance	10 mΩ
Termination	Crimp or solder
Conductor cross section	AWG 24 … 18; 0.25 … 0.82 mm²
Conductor diameter	max. 2.1 mm
Outer cable diameter	4.9 … 8.6 mm
Shielding	Fully shielded, 360° shielding contact
Mating cycles	min. 500
Temperature range	-40 °C ... +70 °C
Housing material	Plastic, black
Flammability acc. to UL 94	V0

Identification	Part number
HARTING PushPull Signal	
Connector set 10-poles incl. plastic housing and female insert	09 45 145 9010
Order D-Sub crimp female contacts separately	
D-Sub crimp contacts for cable side	
female, turned AWG 24-20; 0.25 - 0.52 mm²	09 67 000 8476[1)]
female, turned AWG 22-18; 0.33 - 0.82 mm²	09 67 000 3476[1)]
female, stamped AWG 24-20; 0.25 - 0.56 mm²	09 67 000 8278[2)]

Drawing

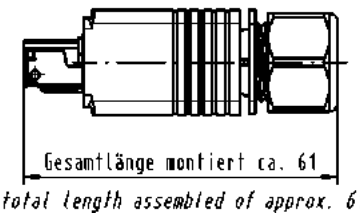

Dimensions in mm

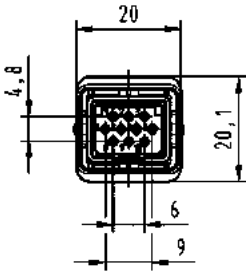

[1)] To be used with crimp tool 09 99 000 0501. Suitable locator: 09 99 000 0531
[2)] To be used with crimp tool 09 99 000 0175.

HARTING PushPull Signal

Identification	Part number	Drawing	Dimensions in mm
HARTING PushPull Signal			
Insert for panel feed-through HIFF, 10-poles incl. male insert	09 45 545 9010	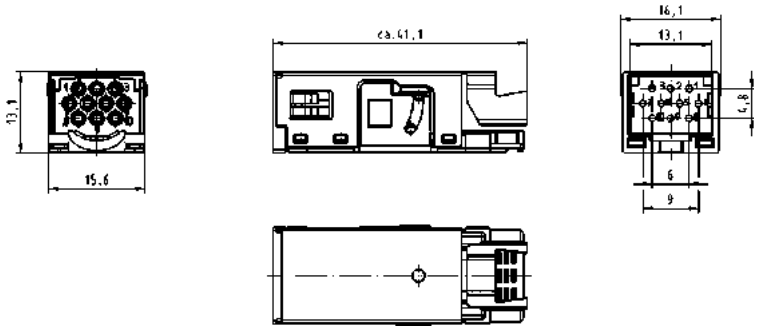	
Order D-Sub crimp male contacts separately			
D-Sub crimp contacts for device side			
male, turned AWG 24-20; 0.25-0.52 mm²	09 67 000 8576[1)]		
male, turned AWG 22-18; 0.33-0.82 mm²	09 67 000 3576[1)]		
male, stamped AWG 24-20; 0.25-0.56 mm²	09 67 000 8178[2)]		
HARTING PushPull			
suitable housing, bulkhead mounting, plastic			
EasyInstall	09 45 545 0032	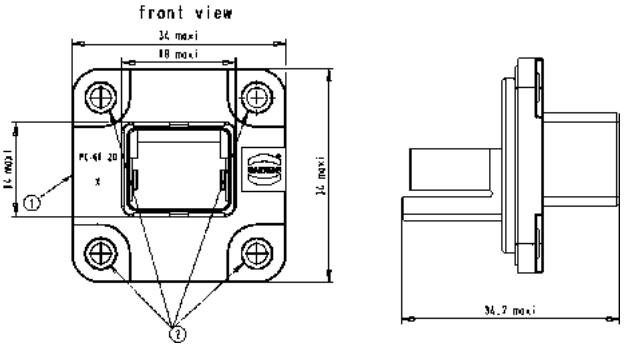	
Compact	09 45 545 0028	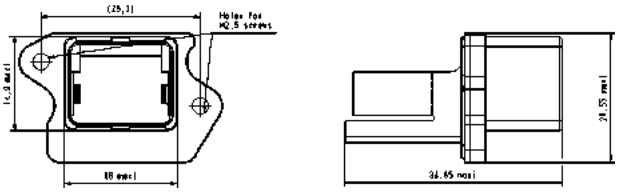	
HARTING PushPull Signal solder jack angled	09 45 545 9011	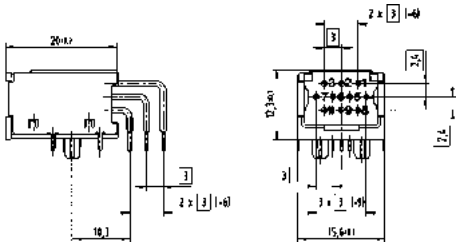	
suitable housings, bulkhead mounting			
with fixing clip	09 45 545 0029		
without fixing clip	09 45 545 0033		
HARTING PushPull Signal solder jack straight	09 45 545 9012	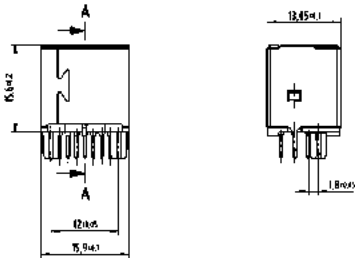	
suitable housing, bulkhead mounting	09 45 545 0027		

[1)] To be used with crimp tool 09 99 000 0501. Suitable locator: 09 99 000 0531
[2)] To be used with crimp tool 09 99 000 0175.

HARTING PushPull USB

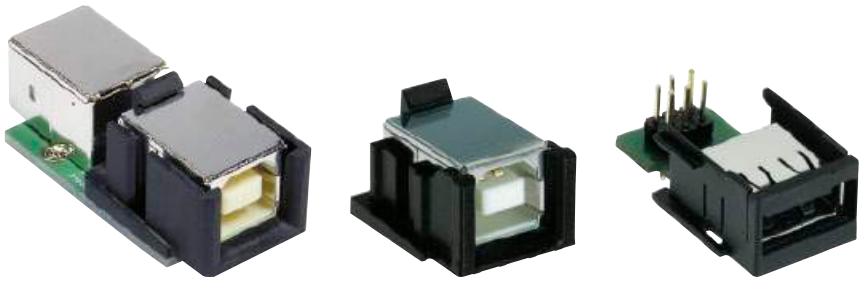

HARTING PushPull USB
Components device side and panel feed-throughs

Advantages

- HARTING PushPull technology
- Compact, space-saving design for the device integration of USB jacks
- USB 2.0 and 3.0 compatible

Technical characteristics

Mating face	USB 2.0 type B and USB 2.0 / 3.0 type A
Number of contacts	USB 2.0: 4 and USB 3.0: 9
Degree of protection	IP65 / IP67
Mating cycles	min. 750
Temperature range	-40 °C … +70 °C

Identification	Part number	Drawing	Dimensions in mm
Components device side			
USB 2.0 type B Solder jack, angled 90°, THT	09 45 541 1900	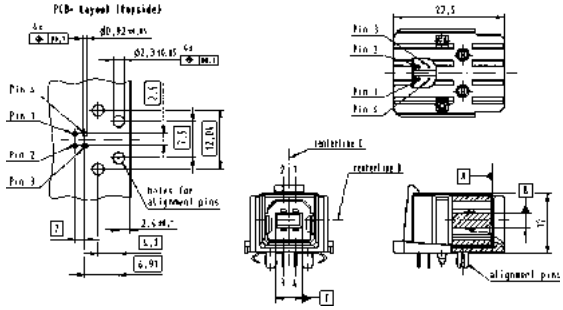	
Adapter PCB USB 2.0 type A Jack to pin header Jack to solder points	09 45 541 1902 09 45 541 1903	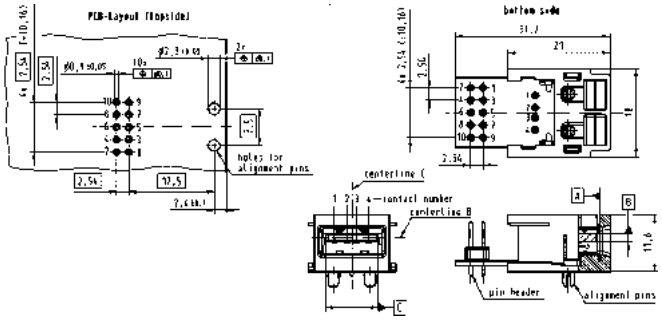	
Adapter PCB USB 2.0 type B Jack to jack			
Type B-B	09 45 541 1906	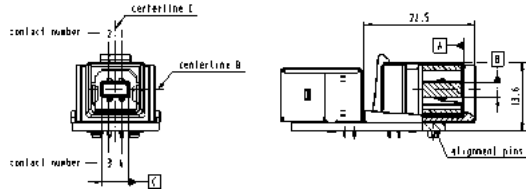	
Type B-B, 90°	09 45 541 1907		
Type A-B	09 45 541 1910		

All solder jacks and adapter PCB's are suitable for the HARTING PushPull bulkhead mounting housings 09 45 545 0029 / … 0030 / … 0031 / … 0033 (see page 02.04)

HARTING PushPull USB

HARTING PushPull USB
Panel feed-throughs

Advantages

- HARTING PushPull technology
- Compact, space-saving design for the device integration of USB jacks
- USB 2.0 and 3.0 compatible

Technical characteristics

Mating face	USB 2.0 / 3.0 type A
Number of contacts	USB 2.0: 4 and USB 3.0: 9
Degree of protection	IP65 / IP67
Mating cycles	min. 750
Temperature range	-40 °C … +70 °C

Identification	Part number	Drawing	Dimensions in mm
Panel feed-throughs			
EasyInstall style			
USB 2.0 type A 2 x jack	09 45 245 1903		
USB 3.0 type A 2 x jack	09 45 245 1905		
Compact style			
USB 2.0 type A 2 x jack	09 45 245 1902		
USB 3.0 type A 2 x jack	09 45 245 1904		

HARTING PushPull USB

HARTING PushPull USB
System cables

Advantages

- HARTING PushPull technology
- Compact, space-saving design for the device integration of USB jacks
- USB 2.0 and 3.0 compatible
- Fully shielded, 360° shielding contact
- Robust design, suitable for industrial applications

Technical characteristics

Mating face	USB 2.0 type B and USB 2.0 / 3.0 type A
Number of contacts	USB 2.0: 4 and USB 3.0: 9
Degree of protection	IP65 / IP67
Mating cycles	min. 750
Temperature range	-40 °C … +70 °C

Identification		Part number	Drawing	Dimensions in mm
System cables 2 x PushPull USB				
USB 2.0 type B-B	Length: 1.5 m 5.0 m	09 45 145 3902 09 45 145 3905	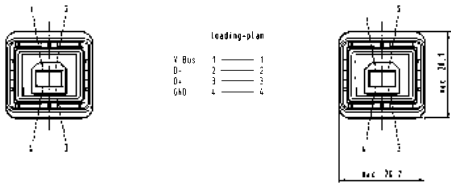	
USB 2.0 type A-A	Length: 1.5 m 5.0 m	09 45 145 1902 09 45 145 1905		
USB 3.0 type A-A	Length: 1.5 m 5.0 m	09 45 145 2902 09 45 145 2905	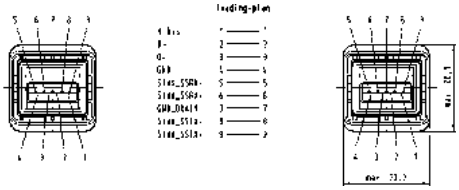	
System cables 1 x PushPull USB 1 x IP20 USB				
USB 2.0 type B-B	Length: 1.5 m 5.0 m	09 45 145 3912 09 45 145 3915		
USB 2.0 type A-A	Length: 1.5 m 5.0 m	09 45 145 1912 09 45 145 1915	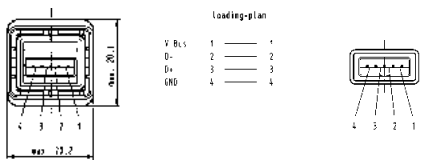	
USB 3.0 type A-A	Length: 1.5 m 5.0 m	09 45 145 2912 09 45 145 2915	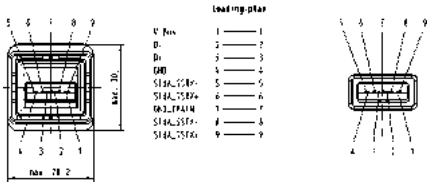	

Other types and lengths on request

HARTING offers with the HARTING PushPull Power connector an universal solution for the power supply in compact and robust applications. It is in its element whereever small dimensions are combined with a high protection class.

The connector is available in a 4-pole 48 V and a 2-pole 250 V version. The power contacts can carry up to 12 rsp. 16 A each (see deratings). In spite of this high current carrying capacity the connector gets by with minimal dimensions and fulfils the industrial requirements for clearances and creepage distances at eht same time (pollution degree 3 and overvoltage category III).

Additionally the HARTING PushPull Power connector offers the protection class of IP67 and 65. Beside numerous industrial use cases it is thereby suited for diverse applications in the fields of transportation and telecommunication.

The cable side of the HARTING PushPull Power is terminated with crimping technology. For the receptacle several solutions with different termination technologies are offered.

Regulations

- VDE 0110
- DIN EN 61 984

Advantages

- Minimum space requirements in spite of high current carrying capacity
- Very compact housing in a high protection class
- Protection against contact on plug AND receptacle side enables an easy and safe installation
- For low voltage (48 V) and for power supply (250 V) available
- Codeable without losing contacts
- Different termination technologies for individual device integration

Typical application areas

- Factory and building automation
- Industrial electronics
- Telecommunication and wireless networks
- Transportation
- Industrial monitoring and camera systems
- Lighting and display technology
- Access control systems

Current carrying capacity

The current carrying capacity is determined in tests which are conducted on the basis of the DIN IEC 60 512-5-2. The current carrying capacity in limited by the thermal properties of materials which are used for inserts as well as by the insulating materials. These components have a limiting temperature which should not be exceeded.

Example of a current capacity curve

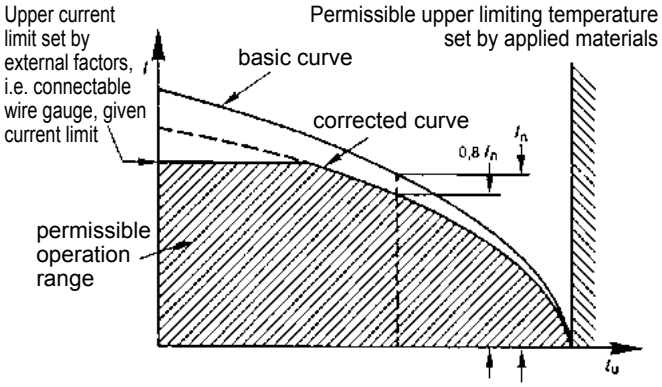

Derating-Diagram for low voltage, 48 V; 4x 12 A

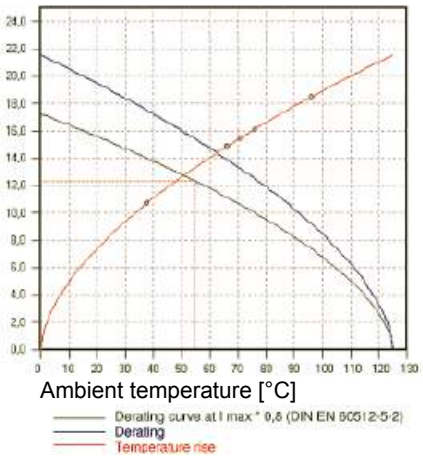

Derating-Diagram for power supply, 250 V; 2x 16 A

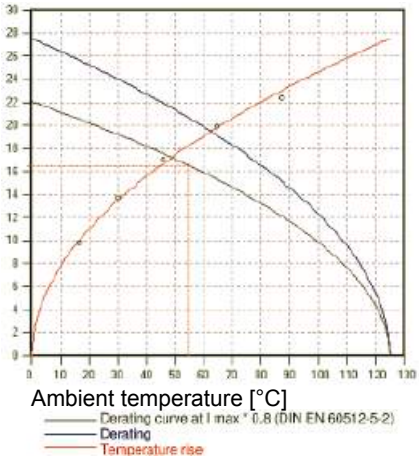

HARTING PushPull Power

HARTING PushPull Power 4/0, type acc. to IEC 61 076-3-106 variant 4
panel feed-throughs 4-poles 48 V / 12 A

Advantages

- Power connectors for devices
- EasyInstall and Compact panel feed-through and females for simple device integration
- Compact, space-saving design
- Touch-proof according to IEC DIN EN 60 529
- Polarisation with nose
- Device side: female with cable cage, crimp or solder termination
- 4 different coding variants without loss of contact

Technical characteristics

Locking	PushPull Technology acc. to IEC 61 076-3-106 variant 4
Degree of protection	IP65 / IP67
Number of contacts	4
Electrical data acc. to EN 61 984	 12 A 48 V 1.5 kV 3
Termination Termination cross section	Crimp 0.75 - 2.5 mm² (AWG 20 - 12) stranded
Termination Termination diameter	Solder pins 1.6 mm
Termination Termination cross section	Cable cage 0.75 - 2.5 mm² (AWG 20 - 12) stranded
Mating cycles	min. 750
Temperature range	-40 °C … +70 °C
Housing material	Plastic, black
Flammability acc. to UL 94	V0

Identification	Part number	Drawing	Dimensions in mm
Panel feed-through set			
Housing bulkhead mounting **EasyInstall**			
with 4 turned female contacts and insulation body			
with crimp termination for 1.5 mm²	09 46 245 4430 09 46 295 4430[1]		
with solder termination, 90° angled	09 46 245 4030		
with cage clamp terminal on pcb	09 46 245 4031 09 46 295 4031[1]		
Housing bulkhead mounting **Compact**			
with 4 turned female contacts and insulation body			
with crimp termination for 1.5 mm²	09 46 245 4400		
with solder termination, 90° angled	09 46 245 4000		
with cage clamp terminal on pcb	09 46 245 4001		
Power-female with solder termination			
4-poles, 48 V / 12 A, 90° angled	09 46 500 4400[2]		
4-poles, 48 V / 12 A, straight	09 46 500 4402[3]		
Power-female with crimp termination	09 46 500 4401		

Panel cut outs see page 02.04

[1] Metal version (without contacts)
[2] Suitable housings: 09 45 545 0029 / … 0030 / … 0031
[3] Suitable housing: 09 45 545 0027

HARTING PushPull Power

HARTING PushPull Power 4/0, type acc. to IEC 61 076-3-106 variant 4
connector 4-poles 48 V / 12 A

Advantages

- Power connectors for devices
- EasyInstall panel feed-through for simple device integration
- Compact, space-saving design
- Touch-proof according to IEC DIN EN 60 529
- Polarisation with nose
- Cable side: Male with crimp termination
- 4 different coding variants without loss of contact

Technical characteristics

Locking	PushPull Technology acc. to IEC 61 076-3-106 variant 4
Degree of protection	IP65 / IP67
Number of contacts	4
Electrical data acc. to EN 61 984	12 A 48 V 1.5 kV 3
Cable diameter	4.9 ... 8.6 mm
Termination	Crimp
Termination cross section	0.75 - 2.5 mm² (AWG 20 - 12) stranded
Mating cycles	min. 750
Temperature range	-40 °C … +70 °C
Housing material	Plastic, black
Flammability acc. to UL 94	V0

Identification	Part number
Connector set incl. 4 turned crimp contacts (male) for 1.5 mm², insulation body, housing, cable gland	09 46 145 4400 09 46 195 4400[1)]
Connector set without contacts	09 46 145 4401
Accessories – crimp contacts male	
0.75 mm² (AWG 20 - 18)	09 46 500 0403
1.0 mm² (AWG 18)	09 46 500 0407
1.5 mm² (AWG 16 - 14)	09 46 500 0401
2.5 mm² (AWG 12)	09 46 500 0405
Accessories – crimp contacts female	
0.75 mm² (AWG 20 - 18)	09 46 500 0404
1.0 mm² (AWG 18)	09 46 500 0408
1.5 mm² (AWG 16 - 14)	09 46 500 0402
2.5 mm² (AWG 12)	09 46 500 0406
Accessories – Coding pin set to avoid accidental incorrect mating a coding system is required. This coding pins are inserted without loss of contact.	09 46 840 0000

Drawing

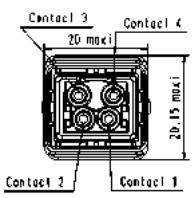

Dimensions in mm

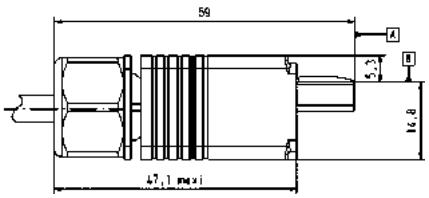

[1)] Metal version (without contacts)

HARTING PushPull Power 2/0, type acc. to IEC 61 076-3-106 variant 4
panel feed-through and connector, 3-poles, 250 V / 16 A

Advantages

- Power connectors for devices
- EasyInstall panel feed-through for simple device integration
- Compact, space-saving design
- Touch-proof according to IEC DIN EN 60 529
- Polarisation with nose
- Cable side: Male with crimp termination
- Device side: female with crimp termination
- 4 different coding variants without loss of contact

Technical characteristics

Locking	PushPull Technology acc. to IEC 61 076-3-106 variant 4
Degree of protection	IP65 / IP67
Number of contacts	2 + PE
Electrical data acc. to EN 61 984	16 A 250 V 4 kV 3
Cable diameter	4.9 ... 8.6 mm
Termination	Crimp
Termination cross section	0.75 - 2.5 mm² (AWG 20 - 12) stranded
Mating cycles	min. 750
Temperature range	-40 °C … +70 °C
Housing material	Plastic, black
Flammability acc. to UL 94	V0

Identification	Part number	Drawing	Dimensions in mm
HARTING PushPull Power 2/0			
Panel feed-through set incl. 3 turned crimp contacts (female) for 1.5 mm², insulation body (black), housing bulkhead mounting EasyInstall	09 46 245 3430		
Panel feed-through set incl. 3 turned contacts (female) for 1.5 mm², insulation body (black), housing bulkhead mounting, with crimp termination	09 46 245 3410		
Power-female with solder termination[1)] angled	09 46 500 3400		
Power-female with crimp termination without contacts	09 46 500 3401		
Connector set incl. 3 turned crimp contacts (male) for 1.5 mm², insulation body (black), housing, cable gland	09 46 145 3410		
Connector set without contacts	09 46 145 3411		
Coding pin set to avoid accidental incorrect mating a coding system is required. This coding pins are inserted without loss of contact.	09 46 840 0000		

Crimp contacts see page 02.28
Panel cut outs see page 02.04

[1)] Suitable housings: 09 45 545 0029 / … 0031

Identification	Part number		
HARTING PushPull Power 8-indent crimping tool incl. positioner	09 46 800 0000		For wire gauges 0.08 … 4.0 mm² (AWG 28 … 12).
Locator HARTING PushPull Power contacts for Buchanan crimping tool (09 99 000 0001)	09 46 800 0010		
Insertion tool	09 46 800 0099		For an easy insertion and extraction of the male and female crimp contacts into / out of the insulator body.
Extraction tool	09 46 800 0098		

Crimp connection

A perfect crimp connection is gastight, therefore corrosion free and amounts to a cold weld of the parts being connected. For this reason, major features in achieving high quality crimp connections are the design of the contact crimping parts and of course the crimping tool itself. Wires to be connected must be carefully matched with the correct size of crimp contacts. If these basic requirements are met, users will be assured of highly reliable connections with low contact resistance and high resistance to corrosive attack.

The economic and technical advantages are:

- Constant contact resistance as a result of precisely repeated crimp connection quality
- Corrosion free connections as a result of cold weld action
- Pre-preparation of cable forms with crimp contacts fitted
- Optimum cost cable connection

Requirements for crimp connectors are laid down in DIN IEC 60 352-2, Amend. 2, as illustrated in the table.

Pull out force of stranded wire

The main criterion to judge the quality of a crimp connection is the retention force achieved by the wire conductor in the terminal section of the contact. DIN IEC 60 352, part 2, defines the extraction force in relation to the cross-section of the conductor. When fitted using HARTING crimping tools and subject to their utilization in an approved manner, our crimp connectors comply with the required extraction forces.

Tensile strength of crimped connections

Conductor cross-section		Tensile strength
mm²	AWG	N
0.08	28	11
0.12	26	15
0.14		18
0.22	24	28
0.25		32
0.32	22	40
0.5	20	60
0.75		85
0.82	18	90
1.0		108
1.3	16	135
1.5		150
2.1	14	200
2.5		230
3.3	12	275
4.0		310

Extract from DIN IEC 60 352-2, Amend. 2, Table IV

Crimping tools

Crimping tools (hand operated or automatic) are carefully designed to produce with high pressure forming parts a symmetrical connection of the crimping part of the contact and the wire being connected with the minimum increase in size at the connection point. The positioner automatically locates the crimp and wire at the correct point in the tool.

A ratchet in the tool performs 2 functions:

① It prevents insertion of the crimp into the tool for crimping before the jaws are fully open

② It prevents the tool being opened before the crimping action is completed

Identical, perfectly formed, connections can be produced using this crimping system.

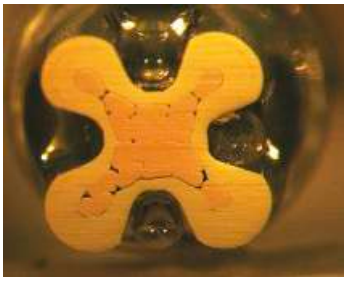

Crimp-cross section
HARTING crimp profile

Identification	Part number	Drawing	Dimensions in mm
Transport protecion for device side IP40	09 45 845 0003	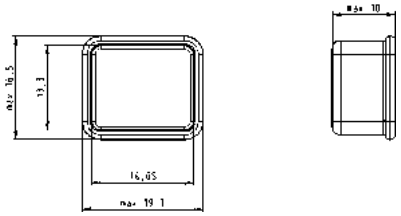	
Protection cover for device side IP65 / IP67			
Version with passive locking without cord	09 45 845 0009 024		
Version with passive locking with plastic cord for fixing screw M3	09 45 845 0009	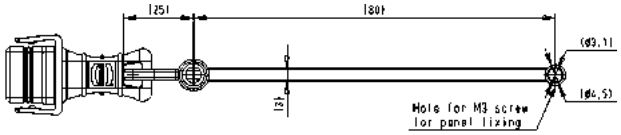	
Version with passive locking with nylon cord for fixing screw M2.5 / M3	09 45 845 0011 024	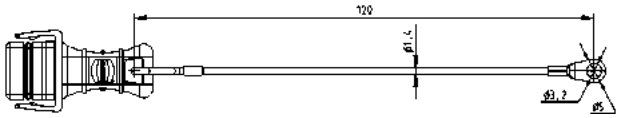	
Version with active locking without cord	09 45 845 0015	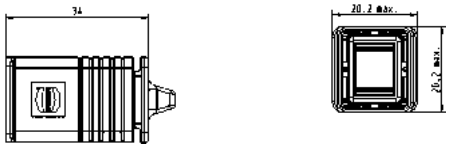	
Version with active locking with plastic cord for fixing screw M3	09 45 845 0014	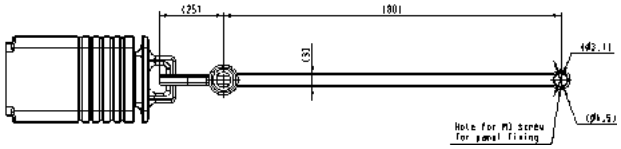	
Version with active locking with nylon cord for fixing screw M2.5 / M3	09 45 845 0013	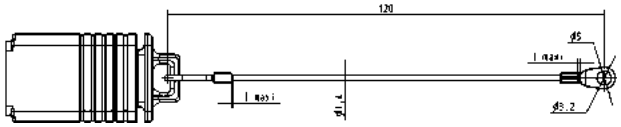	
Protection cover for connectors IP65 / IP67	09 45 845 0010	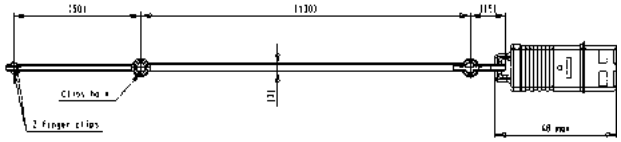	
Security clip for connectors can be sealed and protects against unauthorized unplugging	09 45 845 0020	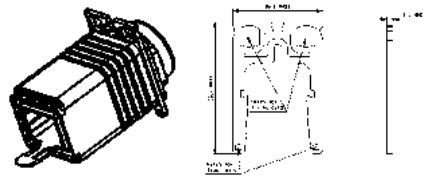	
Blinding plate to close PushPull Compact panel cuttings	09 45 845 0019		

HARTING PushPull, type acc. to IEC 61 076-3-106 variant 4
cable to cable housing

Features

- HARTING PushPull technology
- Ideal for prototyping
- Can be combined with panel feed-throughs for power, data and signal

Technical characteristics

Locking	PushPull technology acc. to IEC 61 076-3-106 variant 4
Degree of protection	IP65 / IP67
Outer cable diameter	6.5 … 9.5 mm
Mating cycles	min. 750
Temperature range	-40 °C ... +70 °C
Housing material	Plastic, black
Flammability acc. to UL 94	V0

Identification	Part number	Drawing	Dimensions in mm
HARTING PushPull cable to cable housings, plastic (Order housing bulkhead mounting and insert separately)			
for outer cable diameter 6.5 … 9.5 mm	09 45 345 0000	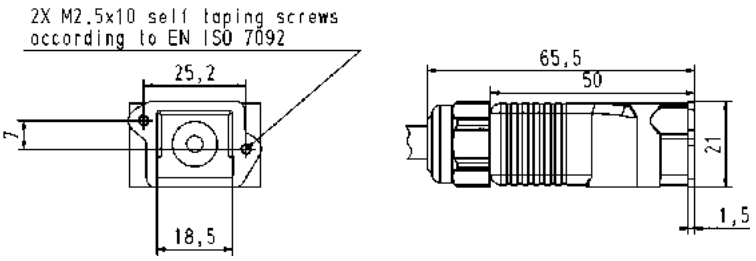	
HARTING PushPull bulkhead housings, plastic (Order housing bulkhead mounting and insert separately)	09 45 345 0001	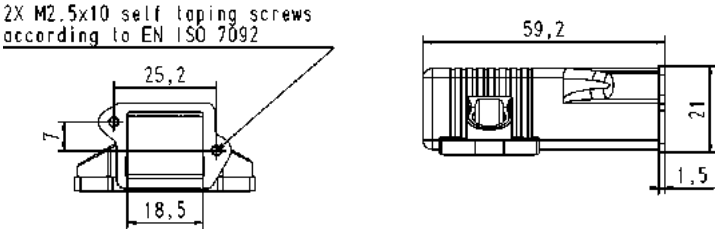	
Suitable bulkhead housing, plastic			
for RJ45 / Signal	09 45 545 0028		
Inserts for RJ45 / Signal			
RJ 45: 8-poles, Cat. 6 / class E_A			
Ha-Vis preLink® set AWG 22/23	20 82 001 0001		
HARTING RJ Industrial® cable jack with IDC termination			
AWG 22-24, 8-poles	09 45 545 1562		
AWG 24-28, 8-poles	09 45 545 1561		
AWG 22-24, 4-poles, Cat. 5	09 45 545 1120		
Signal: 10-poles, 50 V / 5 A*	09 45 545 9010		

* Order D-Sub crimp male contacts separately (see pages 02.19 and 02.20)

Han® PushPull RJ45 Plastic

Han® PushPull, type acc. to IEC 61 076-3-117 variant 14
Housing bulkhead mounting for device integration and RJ45 jacks

Features

- HARTING PushPull technology
- Compact design
- High packing density
- Device integration via RJ45 PCB connectors

Technical characteristics

Locking	PushPull technology acc. to IEC 61 076-3-117
Degree of protection	IP65 / IP67
Mating face	RJ45 acc. to IEC 60 603-7
Termination type	Jack with solder termination
Mating cycles	min. 750
Temperature range	-40 °C ... +70 °C
Housing material	Plastic, black
Flammability acc. to UL 94	V0

Identification	Part number	Drawing	Dimensions in mm
Components device side			
Housing bulkhead mounting plastic	09 35 002 0321	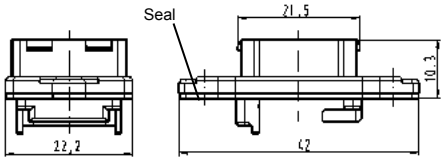	Panel cut out 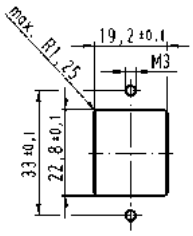
Protection cover IP65 / IP67	09 35 002 5402		PCB layout
RJ45 jack Solder variant, 90° angled	09 35 002 2101[1)]	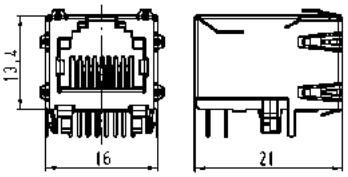	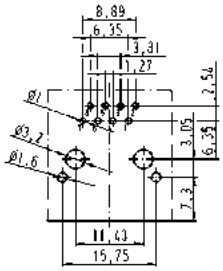
Solder variant, 180° straight	09 35 002 2102[2)]	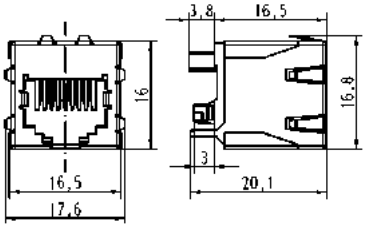	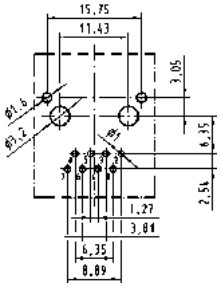

[1)] Packaging: Blister à 90 pieces
[2)] Packaging: Blister à 100 pieces

Han® PushPull RJ45 Plastic

Han® PushPull, type acc. to IEC 61 076-3-117 variant 14
RJ45 panel feed through

Features

- HARTING PushPull technology
- Compact design
- High packing density
- Device integration via RJ45 PCB connectors

Technical characteristics

Locking	PushPull technology acc. to IEC 61 076-3-117
Degree of protection	IP65 / IP67
Mating face	RJ45 acc. to IEC 60 603-7
Transmission performance	acc. to ISO/IEC 11 801:2002, EN 50 173-1, category 5 / class D up to 100 MHz resp. category 6 / class E_A up to 500 MHz
Transmission rate	10 / 100 Mbit/s and 1 / 10 Gbit/s
Number of contacts	8
Shielding	Fully shielded, 360° shielding contact (Cat. 6)
Mating cycles	min. 750
Temperature range	-40 °C ... +70 °C
Housing material	Plastic, black
Flammability acc. to UL 94	V0

Identification	Part number	Drawing	Dimensions in mm
Han® PushPull RJ45 Panel feed through Cat. 6 including housing and HARTING RJ Industrial® 10G RJ45 bulkhead	09 35 225 0331	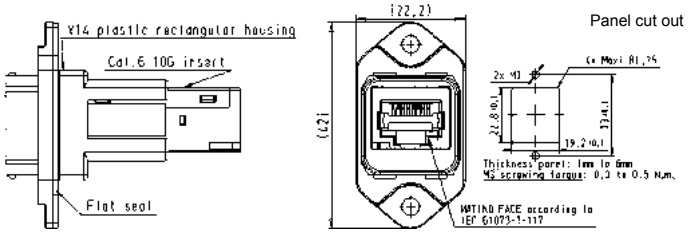	
Panel feed through to mount HIFF inserts, e.g. Ha-VIS preLink® RJ45-module Order inserts separately	09 35 012 0331	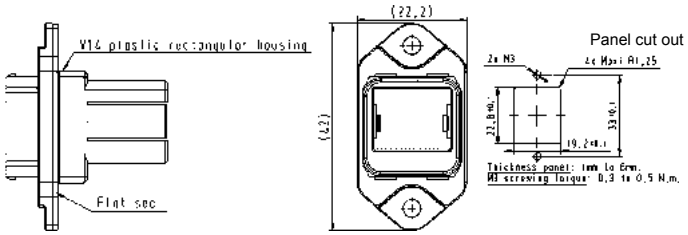	
Ha-VIS preLink® set RJ45 jack AWG 22/23 consists of: • 1x Ha-VIS preLink® module RJ45 jack • 1x Ha-VIS preLink® terminal module • 1x cable tie	20 82 001 0001	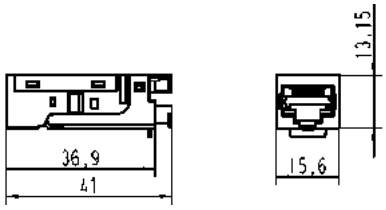	
HARTING RJ Industrial® cable jack IDC			
AWG 22-24, 8-poles, Cat. 6	09 45 545 1562		
AWG 24-28, 8-poles, Cat. 6	09 45 545 1561		
AWG 22-24, 4-poles, Cat. 5	09 45 545 1120		

Recommendation for female insert and assembly manual on request.

Han® PushPull RJ45 Plastic

Han® PushPull, type acc. to IEC 61 076-3-117 variant 14
RJ45 connector

Features

- HARTING PushPull technology
- Field-assembly connector with IDC contacts
- Fully shielded

Technical characteristics

Locking	PushPull technology acc. to IEC 61 076-3-117	
Degree of protection	IP65 / IP67	
Mating face	RJ45 acc. to IEC 60 603-7	
Shielding	Fully shielded, 360° shielding contact	
Number of contacts	4 respectively 8	
Transmission performance	acc. to ISO/IEC 11 801:2002, EN 50 173-1, category 5 / class D up to 100 MHz, category 6 / class E_A up to 500 MHz	
Transmission rate	10/100 Mbit/s and 1/10 Gbit/s	
Termination	with IDC contacts, no tools needed / field-assembly	
for Cat. 5	Conductor cross section	AWG 24/7 - 22/7 (stranded) AWG 23/1 - 22/1 (solid)
	Cable diameter	1.6 mm
for Cat. 6	Conductor cross section	AWG 22/7 - 27/7 (stranded) AWG 22/1 - 27/1 (solid)
	Cable diameter	1.6 mm
Mating cycles	min. 750	
Temperature range	-40 °C ... +70 °C	
Housing material	Plastic, black, UL 94 V0	

Identification	Part number	Drawing	Dimensions in mm
Connector set, plastic incl. housing and male insert			
Han® RJ Industrial Category 5, 4-poles, IDC contacts			
6.5 - 9.5 mm clamp range	09 35 221 0421		
5 - 8 mm clamp range	09 35 222 0421		
Han® RJ Industrial PN Category 5, 4-poles, IDC contacts			
6.5 - 9.5 mm clamp range	09 35 226 0421		
PROFINET-Identification: PROFINET O-Plug RJ45			
Han® RJ Industrial 10G Category 6, 8-poles, IDC contacts			
6.5 - 9.5 mm clamp range	09 35 225 0421		
5 - 8 mm clamp range	09 35 228 0421		

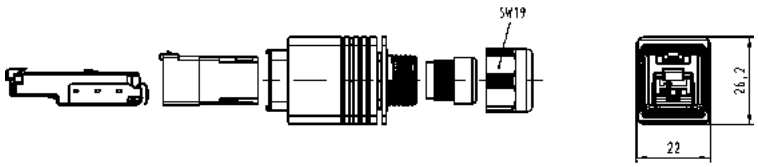

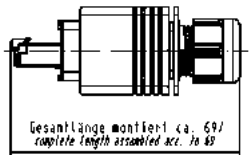

Han® PushPull RJ45 Plastic

Han® PushPull, type acc. to IEC 61 076-3-117 variant 14
RJ45 connector

Features

- HARTING PushPull technology
- Field-assembly connector with piercing contacts
- Fully shielded

Technical characteristics

Locking	PushPull technology acc. to IEC 61 076-3-117
Degree of protection	IP65 / IP67
Mating face	RJ45 acc. to IEC 60 603-7
Shielding	Fully shielded, 360° shielding contact
Number of contacts	8
Transmission performance	acc. to ISO/IEC 11 801:2002, EN 50 173-1, category 6_A / class E_A up to 500 MHz
Transmission rate	10/100 Mbit/s and 1/10 Gbit/s
Termination	with piercing contacts
Conductor cross section	AWG 24/7 - 27/7 (stranded)
Cable diameter	1.05 mm
Mating cycles	min. 750
Temperature range	-40 °C ... +70 °C
Housing material	Plastic, black, UL 94 V0

Identification	Part number	Drawing	Dimensions in mm
Connector set, plastic incl. housing and male insert 5 - 8 mm clamp range		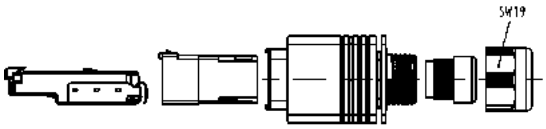 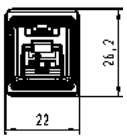	
Han® RJ Industrial Category 6_A, 8-poles, piercing contacts	09 35 227 0421	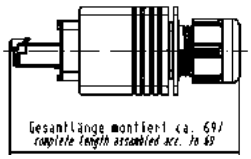	
suitable assembly tool	09 45 800 0520		

Han® PushPull RJ45 Metal

Han® PushPull, type acc. to IEC 61 076-3-117 variant 14
Housing bulkhead mounting for device integration and RJ45 jacks

Features

- HARTING PushPull technology
- Compact design
- High packing density
- Device integration via RJ45 PCB connectors

Technical characteristics

Locking	PushPull technology acc. to IEC 61 076-3-117
Degree of protection	IP65 / IP67
Mating face	RJ45 acc. to IEC 60 603-7
Termination type	Jack with solder termination
Mating cycles	min. 750
Temperature range	-40 °C ... +70 °C
Housing material	Zinc die-cast, nickel plated

Identification	Part number	Drawing	Dimensions in mm
Components device side			
Housing bulkhead mounting metal	09 35 002 0301		
Protection cover IP65 / IP67	09 35 002 5402		
RJ45 jack Solder variant, 90° angled	09 35 002 2101[1]		
Solder variant, 180° straight	09 35 002 2102[2]		

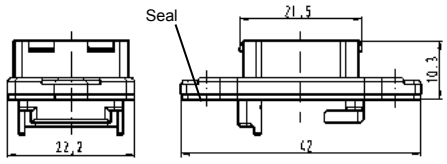

Panel cut out

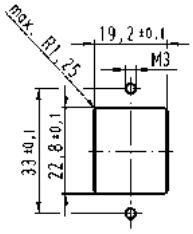

PCB layout

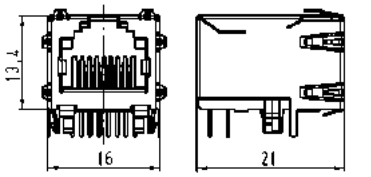

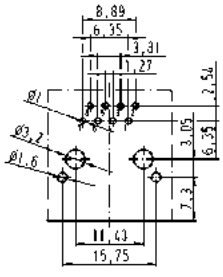

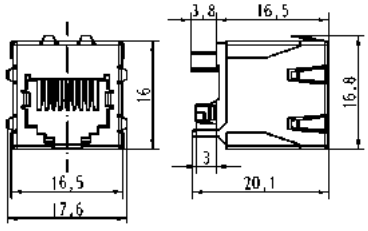

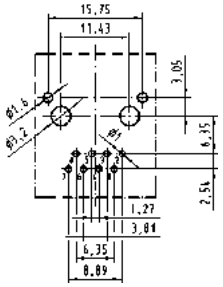

[1] Packaging: Blister à 90 pieces
[2] Packaging: Blister à 100 pieces

Han® PushPull RJ45 10G Metal

Han® PushPull, type acc. to IEC 61 076-3-117 variant 14
RJ45 10G panel feed through

Features

- HARTING PushPull technology
- Compact and robust design
- 360° shielding
- RJ45 mating compatible
- Transmission category 6, performance class E_A, suitable for 1/10 Gigabit Ethernet
- PROFINET conform

Technical characteristics

Locking	PushPull technology acc. to IEC 61 076-3-117 variant 14
Mating face	RJ45 acc. to IEC 60 603-7
Transmission performance	Category 6 / class E_A acc. to ISO/IEC 11 801:2002, EN 50 173-1
Transmission rate	10/100 Mbit/s and 1/10 Gbit/s
Shielding	Fully shielded, 360° shielding contact
Mounting	Screwable to cover plates
Degree of protection	IP65 / IP67
Mating cycles	min. 750
Temperature range	-40 °C … +70 °C
Housing material	Zinc die-cast, nickel-plated

Identification	Part number	Drawing	Dimensions in mm
Han® PushPull RJ45 10G			
Panel feed through, Cat. 6 including bulkhead housing for rectangular panel cut out, flat seal and HARTING RJ Industrial® 10G RJ45 bulkhead, isolated bulkhead fixture	09 35 225 0311	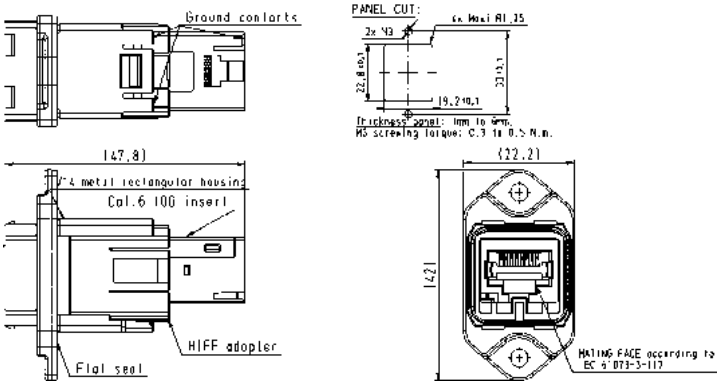	
Panel feed through, Cat. 6 including bulkhead housing for circular panel cut out, flat seal and HARTING RJ Industrial® 10G RJ45 bulkhead, isolated bulkhead fixture	09 35 225 0312	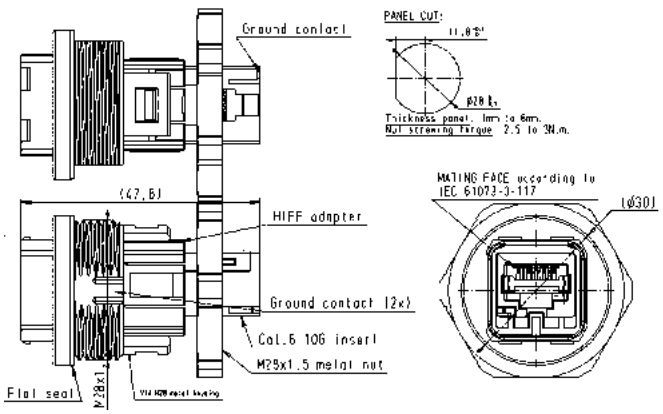	

Identification	Part number	Drawing	Dimensions in mm
Han® PushPull RJ45 10G			
Panel feed-through to mount HIFF inserts, e.g. Ha-VIS preLink® RJ45-module, RJ Industrial cable jack Order inserts separately		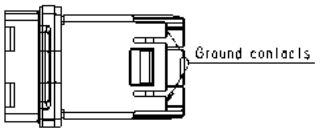	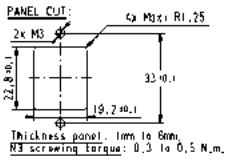
Bulkhead housing for rectangular panel cut out, incl. plastic adapter	09 35 012 0311	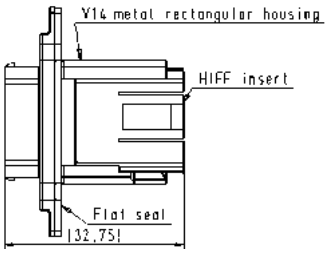	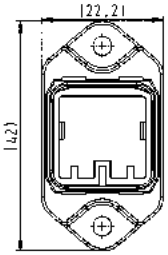
Bulkhead housing for circular panel cut out, incl. plastic adapter and fixing nut	09 35 012 0312	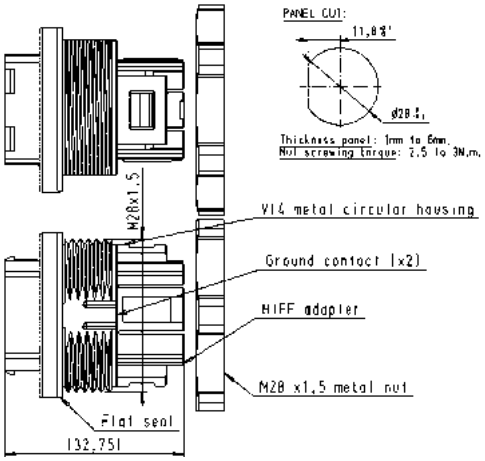	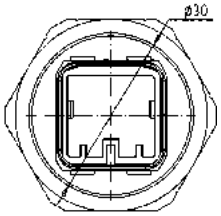
Ha-VIS preLink® set RJ45 jack AWG 22/23 consists of: • 1x Ha-VIS preLink® module RJ45 jack • 1x Ha-VIS preLink® terminal module • 1x cable tie	20 82 001 0001	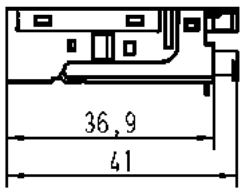	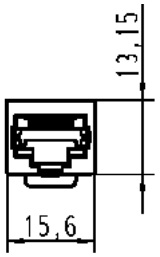
HARTING RJ Industrial® cable jack IDC			
AWG 22-24, 8-poles, Cat. 6	09 45 545 1562		
AWG 24-28, 8-poles, Cat. 6	09 45 545 1561		
AWG 22-24, 4-poles, Cat. 5	09 45 545 1120		

Han® PushPull RJ45 Metal

Han® PushPull RJ45 Genderchanger Metal
Cat. 6 / Class E_A

Features

- High degree of protection IP65 / IP67
- Robust metal housing
- Standard PROFINET component of the German automotive production
- Allows usage of different cable types (Type B, C) e.g. in robots application
- Extension of cords according to PROFINET guideline
- Can be count as one connection acc. to IEC 11 801 Chapter 10.2.4

Technical characteristics

Transmission performance	Cat. 6 / Class E_A up to 500 MHz
Connector	Han® PushPull RJ45 (PROFINET conform)
Locking	PushPull technology acc. to IEC 61 076-3-117 variant 14
Mating face	RJ45 acc. to IEC 60 603-7
Mating cycles	min. 750
Housing material	Aluminium anodized
Dimensions	61.2 x 62 x 25.2 mm (unmated)
Degree of protection acc. to DIN 60 529	IP65 / IP67 (mated)
Mounting	Wall mountable with 4 screws (type M5)
Temperature range	-40 °C ... +70 °C
Maximum permissible humidity	30 % ... 95 % (no condensation)

Identification	Part number	Drawing	Dimensions in mm
Han® PushPull RJ45 Genderchanger metal	09 35 221 0501	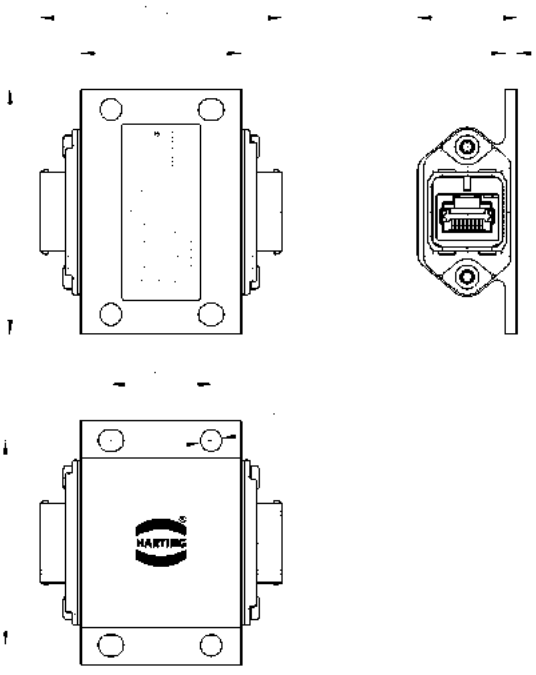	

Han® PushPull RJ45 Metal

Han® PushPull RJ45 Coupling Metal
Cat. 6 / Class E_A

Features

- High degree of protection IP65 / IP67
- Robust metal housing
- Standard PROFINET component of the German automotive production
- Extension of cords according to PROFINET guideline
- Can be count as one connection acc. to IEC 11 801 Chapter 10.2.4
- For an easy robot termination and a fast exchange of tube packages

Technical characteristics

Transmission performance	Cat. 6 / Class E_A up to 500 MHz
Transmission rate	10/100 Mbit/s and 1/10 Gbit/s
Locking	PushPull technology acc. to IEC 61 076-3-117 variant 14
Mating face	RJ45 acc. to IEC 60 603-7
Number of contacts	8
Usable cables	
Termination cross section	AWG 22-24 stranded/solid
Cable diameter	5 … 9 mm
Conductor diameter	1.3 … 1.6 mm
Mating cycles	min. 750
Housing material	Aluminium die-cast
Degree of protection acc. to DIN 60 529	IP65 / IP67
Temperature range	-40 °C ... +70 °C

Identification	Part number	Drawing	Dimensions in mm
Han® PushPull RJ45 Coupling metal including housing, Ha-VIS preLink® RJ45 jack, bulkhead housing and cable gland	61 04 201 1084	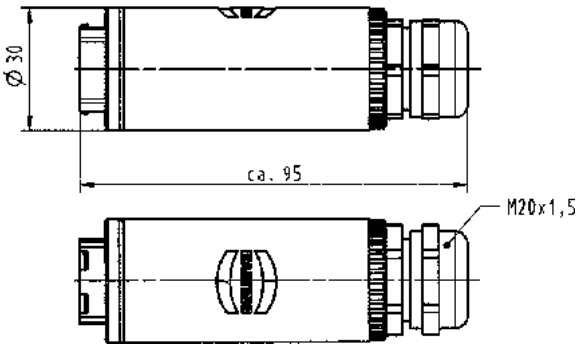	
Fixing flange	61 04 600 0182	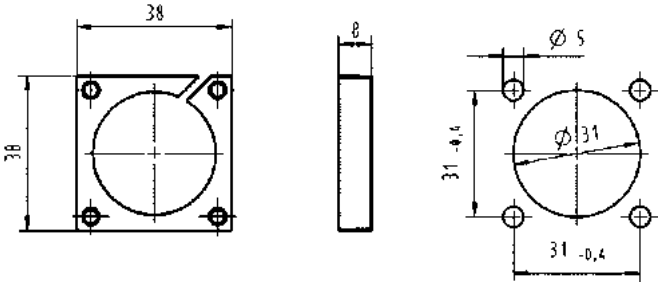	

Han® PushPull RJ45 Metal

Han® PushPull, type acc. to IEC 61 076-3-117 variant 14
RJ45 connector

Features

- HARTING PushPull technology
- Field-assembly connector with IDC contacts
- Fully shielded

Technical characteristics

Locking	PushPull technology acc. to IEC 61 076-3-117
Degree of protection	IP65 / IP67
Mating face	RJ45 acc. to IEC 60 603-7
Shielding	Fully shielded, 360° shielding contact
Number of contacts	4 respectively 8
Transmission performance	acc. to ISO/IEC 11 801:2002, EN 50 173-1, category 5 / class D up to 100 MHz category 6 / class E_A up to 500 MHz
Transmission rate	10/100 Mbit/s and 1/10 Gbit/s
Termination	with IDC contacts, no tools needed / field-assembly
for Cat. 5	
Conductor cross section	AWG 24/7 - 22/7 (stranded) AWG 23/1 - 22/1 (solid)
Cable diameter	1.6 mm
for Cat. 6	
Conductor cross section	AWG 22/7 - 27/7 (stranded) AWG 22/1 - 27/1 (solid)
Cable diameter	1.6 mm
Mating cycles	min. 750
Temperature range	-40 °C ... +70 °C
Housing material	Zinc die-cast, nickel-plated

Identification	Part number	Drawing	Dimensions in mm
Connector set, metal incl. housing and male insert 4 - 11 mm clamp range			
Han® RJ Industrial Category 5, 4-poles, IDC contacts	09 35 221 0401	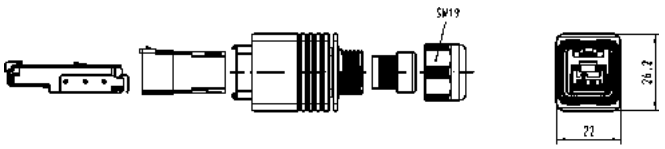	
Han® RJ Industrial PN Category 5, 4-poles, IDC contacts PROFINET-Identification: PROFINET O-Plug RJ45	09 35 226 0401	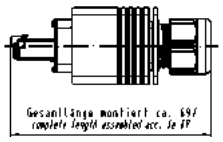	
Han® RJ Industrial 10G Category 6, 8-poles, IDC contacts	09 35 225 0401		

Han® PushPull RJ45 Metal

Han® PushPull, type acc. to IEC 61 076-3-117 variant 14
RJ45 connector angled

Features

- HARTING PushPull technology
- Angled cable exit 45° to the top / bottom for a space saving cabling
- Field-assembly connector with IDC contacts
- Fully shielded

Technical characteristics

Locking	PushPull technology acc. to IEC 61 076-3-117
Degree of protection	IP65 / IP67
Mating face	RJ45 acc. to IEC 60 603-7
Shielding	Fully shielded, 360° shielding contact
Number of contacts	4 respectively 8
Transmission performance	acc. to ISO/IEC 11 801:2002, EN 50 173-1, category 5 / class D up to 100 MHz category 6 / class E_A up to 500 MHz
Transmission rate	10/100 Mbit/s and 1/10 Gbit/s
Termination	with IDC contacts, no tools needed / field-assembly
for Cat. 5	
Conductor cross section	AWG 24/7 - 22/7 (stranded) AWG 23/1 - 22/1 (solid)
Cable diameter	1.6 mm
for Cat. 6	
Conductor cross section	AWG 22/7 - 27/7 (stranded) AWG 22/1 - 27/1 (solid)
Cable diameter	1.6 mm
Mating cycles	min. 750
Temperature range	-40 °C ... +70 °C
Housing material	Zinc die-cast, nickel-plated

Identification	Part number	Drawing	Dimensions in mm
Connector set, metal incl. housing and male insert			
Han® RJ Industrial PN Category 5, 4-poles, IDC contacts, 6.5 - 9.5 mm clamp range			
Cable exit bottom side	09 35 226 0402	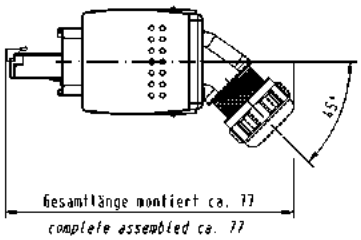	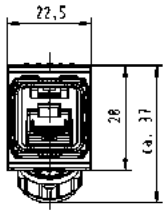
Cable exit top side	09 35 226 0403		
Han® RJ Industrial 10G Category 6, 8-poles, IDC contacts, 6.5 - 9.5 mm clamp range			
Cable exit bottom side	09 35 225 0402	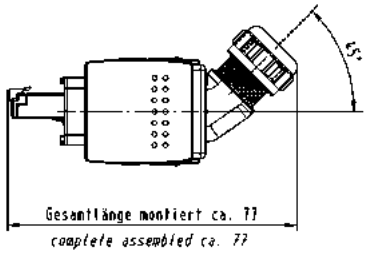	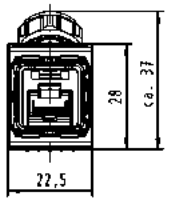
Cable exit top side	09 35 225 0403		

Han® PushPull RJ45 Metal

Han® PushPull, type acc. to IEC 61 076-3-117 variant 14
RJ45 connector

Features

- HARTING PushPull technology
- Compact design
- For space saving fitting conditions
- Connector with piercing contacts
- 360° shielding

Technical characteristics

Locking	PushPull technology acc. to IEC 61 076-3-117
Degree of protection	IP65 / IP67
Mating face	RJ45 acc. to IEC 60 603-7
Shielding	Fully shielded, 360° shielding contact
Number of contacts	8
Transmission performance	acc. to ISO/IEC 11 801:2002, EN 50 173-1, category 6_A / class E_A up to 500 MHz
Transmission rate	10/100 Mbit/s and 1/10 Gbit/s
Termination	with piercing contacts
Conductor cross section	AWG 24/7 - 27/7 (stranded)
Cable diameter	1.05 mm
Mating cycles	min. 750
Temperature range	-40 °C ... +70 °C
Housing material	Zinc die-cast, nickel-plated

Identification	Part number	Drawing	Dimensions in mm
Connector set, metal incl. housing and male insert 4 - 11 mm clamp range		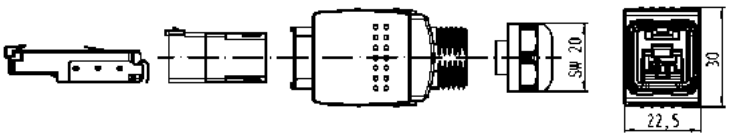	
Han® RJ Industrial Category 6, 8-poles, piercing contacts	09 35 227 0401		
suitable assembly tool	09 45 800 0520		

Han® PushPull RJ45 Metal

Han® PushPull, type acc. to IEC 61 076-3-117 variant 14
preLink® RJ45-connector, straight and angled

Advantages

- HARTING PushPull technology
- 45° angled cable entry, bottom side, for space saving cabling
- 360° shielding
- Category of transmission Cat. 6_A
- Suitable for solid and stranded wires
- Suitable for PoE (IEEE 802.3af) and PoE+ (IEEE 802.3at)

Technical characteristics

Locking	PushPull technology acc. to IEC 61 076-3-117
Degree of protection	IP65 / IP67
Mating face	RJ45 acc. to IEC 60 603-7
Number of contacts	8
Transmission category	Category 6_A, Class E_A, suitable for 1/10 Gigabit Ethernet
Transmission performance	Category 6_A / Class E_A up to 500 MHz acc. to ISO/IEC 11 801:2002, EN 50 173-1
Transmission rate	10/100 Mbit/s and 1/10 Gbit/s
Shielding	fully shielded, 360° shielding contact
Mounting	IDC termination
Cable termination for preLink®	terminal module, yellow, 20 82 000 0001
Connectable cables	
– Conductor cross section	AWG 23 … AWG 22 (solid and stranded)
– Conductor diameter	1.3 … 1.6 mm
Cable termination for preLink®	terminal module, white, 20 82 000 0003
Connectable cables	
– Conductor cross section	AWG 27 … AWG 26 (solid and stranded)
– Conductor diameter	0.8 … 1.1 mm
Cable diameter	6.3 … 8.8 mm
Mating cycles	min. 750
Temperature range	-40 °C ... +70 °C
Housing material	Zinc die-cast, nickel-plated

Identification	Part number	Drawing	Dimensions in mm
Han® PushPull preLink® RJ45 connector, straight	20 82 104 0001	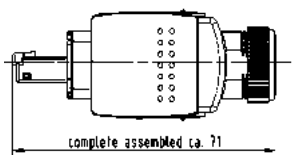	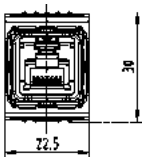
Han® PushPull preLink® RJ45 connector, angled	20 82 104 0045	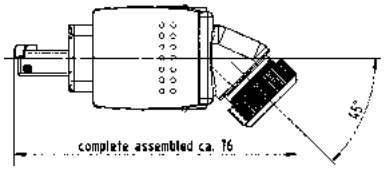	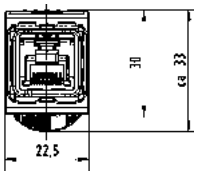
Ha-VIS preLink® RJ45 terminal module		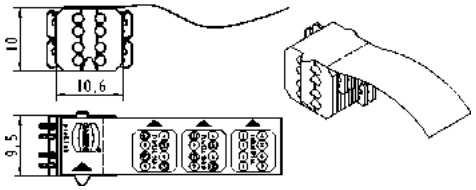	
AWG 22/23, yellow[1]	20 82 000 0001		
AWG 26/27, white[1]	20 82 000 0003		
Ha-VIS preLink® assembly tool	20 82 000 9901	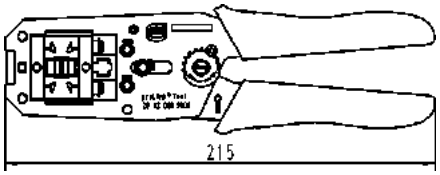	

[1] Packaging with 10 pieces

Han® PushPull RJ45 Accessories

Han® PushPull, type acc. to IEC 61 076-3-117 variant 14
cable to cable housing

Features

- HARTING PushPull technology
- Ideal for prototyping
- Can be combined with panel feed-throughs for power, data and signal

Technical characteristics

Locking	PushPull technology acc. to IEC 61 076-3-117 variant 14
Degree of protection	IP65 / IP67
Outer cable diameter	6.5 … 9.5 mm / 9 … 13 mm
Mating cycles	min. 750
Temperature range	-40 °C ... +70 °C
Housing material	Plastic, black
Flammability acc. to UL 94	V0

Identification	Part number	Drawing	Dimensions in mm
Han® PushPull cable to cable housings, plastic (Order housing bulkhead mounting and insert separately)			
for outer cable diameter 6.5 … 9.5 mm	09 35 002 0431		
for outer cable diameter 9 … 13 mm	09 35 002 0433		
Suitable bulkhead housing, plastic			
for RJ45	09 35 012 0331		
Inserts for RJ45			
RJ 45: 8-poles, Cat. 6 / class E_A			
Ha-Vis preLink® set AWG 22/23	20 82 001 0001		
HARTING RJ Industrial® cable jack with IDC termination			
AWG 22-24, 8-poles	09 45 545 1562		
AWG 24-28, 8-poles	09 45 545 1561		
AWG 22-24, 4-poles, Cat. 5	09 45 545 1120		

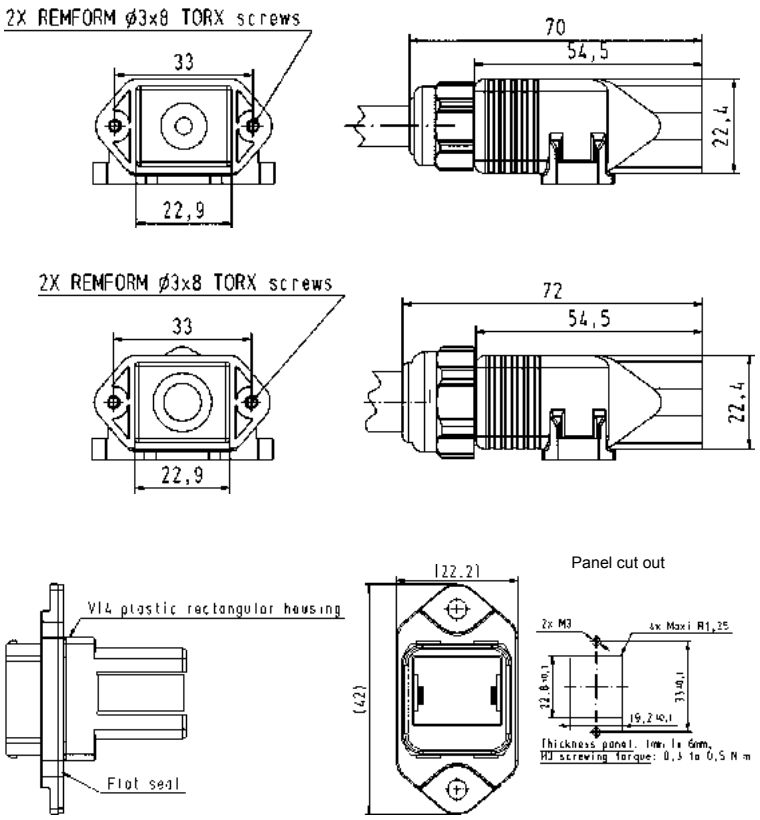

Han® PushPull, type acc. to IEC 61 076-3-117 variant 14
Accessories

Identification	Part number	Drawing	Dimensions in mm
Han® PushPull protection cover IP65 / IP67			
for device side			
without fixing cord	09 35 002 5403 XL[1)]		
with fixing cord	09 35 002 5402 09 35 002 5402 XL[1)]		
with nylon fixing cord	09 35 002 5404 09 35 002 5404 XL[2)]		
Han® PushPull protection cover IP65 / IP67			
for cable side			
without fixing cord	09 35 002 5411		
with nylon fixing cord	09 35 002 5413		

[1)] Packaging with 100 pieces
[2)] Packaging with 250 pieces

Han® PushPull SCRJ Plastic

Han® PushPull, type acc. to IEC 61076-3-117 variant 14
Housing bulkhead mounting for device integration
Optical connector based on SCRJ

Features

- HARTING PushPull technology
- Compact design
- High packing density
- Device integration via transceiver
- Han® PushPull SCRJ for POF is according the requirements of AIDA (German Domestic Automobile Manufacturers)

Technical characteristics

Locking	PushPull technology
Degree of protection	IP65 / IP67
Mating face	SCRJ acc. to IEC 61754-24
Fiber Typen	POF[1] 1 mm
	HCS®[2] 200 µm / 230 µm
	MM 62.5 µm / 125 µm
	MM 50 µm / 125 µm
	SM 10 µm / 125 µm
Mating cycles	min. 750
Temperature range	-40 °C ... +70 °C
Housing material	Plastic, black
Flammability acc. to UL 94	V0

Identification	Part number	Drawing	Dimensions in mm
Components device side			
Housing bulkhead mounting Optical transceiver not included			
plastic	09 35 002 0323		
Protection cover IP65 / IP65	09 35 002 5402		
Reference for transceiver as well as mounting instruction on request			

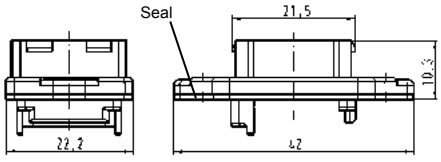

Panel cut out

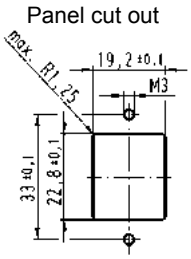

[1] POF = Polymer-Optical Fibre
[2] HCS® = Hard Clad Silica (registered trademark of SpecTran Corporation)

Han® PushPull SCRJ Plastic

Han® PushPull, type acc. to IEC 61 076-3-117 variant 14
RJ45 panel feed through
for optical connector based on SCRJ

Features

- HARTING PushPull technology
- Compact design
- High packing density
- Han® PushPull SCRJ for POF is according the requirements of AIDA (German Domestic Automobile Manufacturers)

Technical characteristics

Locking	PushPull technology
Degree of protection	IP65 / IP67
Mating face	SCRJ acc. to IEC 61 754-24
Fiber Typen	POF[1] 1 mm
	HCS®[2] 200 µm / 230 µm
	MM 62.5 µm / 125 µm
	MM 50 µm / 125 µm
	SM 10 µm / 125 µm
Mating cycles	min. 750
Temperature range	-40 °C ... +70 °C
Housing material	Plastic, black
Flammability acc. to UL 94	V0

Identification	Part number	Drawing	Dimensions in mm
Han® PushPull SCRJ			
Panel feed through	09 35 242 0333		
SC contacts order separately			
SCRJ IP20 POF connector			
with fast termination	09 35 002 4002		
with crimp termination	09 35 002 4003		
Contacts			
SC POF contact, 1 mm	20 10 001 5217		
SC 125 GI contact	20 10 125 5211		
SC 230 HCS contact	20 10 230 5211		

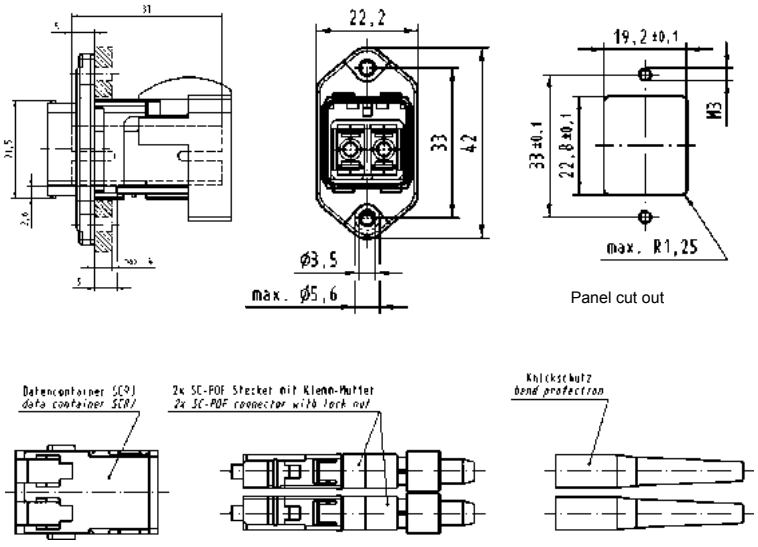

[1] POF = Polymer-Optical Fibre
[2] HCS® = Hard Clad Silica (registered trademark of SpecTran Corporation)

Han® PushPull SCRJ Plastic

Han® PushPull, type acc. to IEC 61076-3-117 variant 14
SCRJ connector

Features

- HARTING PushPull technology
- Compact design
- High packing density
- Han® PushPull SCRJ for POF is according the requirements of AIDA (German Domestic Automobile Manufacturers)
- Field installable

Technical characteristics

Locking	PushPull technology
Degree of protection	IP65 / IP67
Mating face	SCRJ acc. to IEC 61754-24
Fiber Typen	POF[1] 1 mm
	HCS®[2] 200 µm / 230 µm
	MM 62.5 µm / 125 µm
	MM 50 µm / 125 µm
	SM 10 µm / 125 µm
Mating cycles	min. 750
Temperature range	-40 °C ... +70 °C
Housing material	Plastic, black
Flammability acc. to UL 94	V0
Cable diameter	6.5 - 9.5 mm

Identification	Part number	Drawing	Dimensions in mm
Connector set, plastic incl. housing and SCRJ insert, POF contacts			
PROFINET-Identification: PROFINET O-Plug SCRJ	09 35 241 0421		
incl. housing and SCRJ insert SC contacts order separately	09 35 241 0422		
SCRJ IP20 POF connector	09 35 002 4002		
Protection cover IP65 / IP67	09 35 002 5411		
Contacts			
SC POF contact, 1 mm	20 10 001 5217		
SC 125 GI contact	20 10 125 5211		
SC 230 HCS contact	20 10 230 5211		

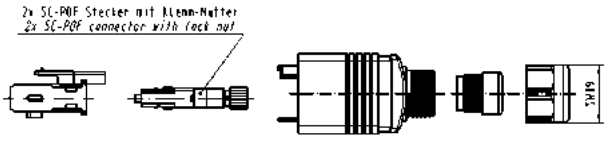

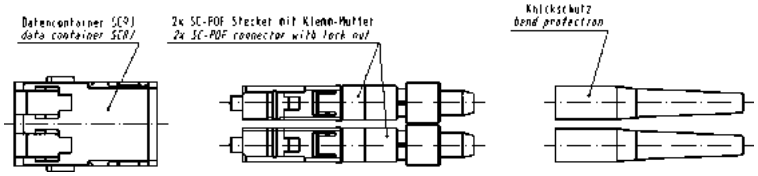

Tooling see page 02.57

[1] POF = Polymer-Optical Fibre
[2] HCS® = Hard Clad Silica (registered trademark of SpecTran Corporation)

Han® PushPull SCRJ Metal

Han® PushPull, type acc. to IEC 61 076-3-117 variant 14
Housing bulkhead mounting for device integration
Optical connector based on SCRJ

Features

- HARTING PushPull technology
- Compact design
- High packing density
- Device integration via transceiver
- Han® PushPull SCRJ for POF
  is according the requirements of AIDA
  (German Domestic Automobile
  Manufacturers)

Technical characteristics

Locking	PushPull technology
Degree of protection	IP65 / IP67
Mating face	SCRJ acc. to IEC 61 754-24
Fiber Typen	POF[1] 1 mm
	HCS®[2] 200 µm / 230 µm
	MM 62.5 µm / 125 µm
	MM 50 µm / 125 µm
	SM 10 µm / 125 µm
Mating cycles	min. 750
Temperature range	-40 °C ... +70 °C
Housing material	Zinc die-cast, nickel plated

Identification	Part number	Drawing	Dimensions in mm
Components device side			
Housing bulkhead mounting Optical transceiver not included			
metal	09 35 002 0303		
Protection cover IP65 / IP67	09 35 002 5402		
Reference for transceiver as well as mounting instruction on request			

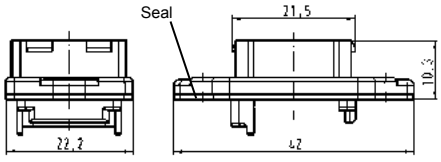

Panel cut out

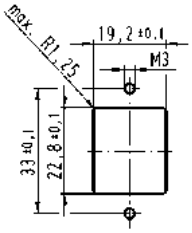

[1] POF = Polymer-Optical Fibre
[2] HCS® = Hard Clad Silica (registered trademark of SpecTran Corporation)

Han® PushPull SCRJ Metal

Han® PushPull, type acc. to IEC 61076-3-117 variant 14
RJ45 panel feed through
for optical connector based on SCRJ

Features

- HARTING PushPull technology
- Compact design
- High packing density
- Han® PushPull SCRJ for POF is according the requirements of AIDA (German Domestic Automobile Manufacturers)

Technical characteristics

Locking	PushPull technology
Degree of protection	IP65 / IP67
Mating face	SCRJ acc. to IEC 61754-24
Fiber Typen	POF[1] 1 mm
	HCS®[2] 200 µm / 230 µm
	MM 62.5 µm / 125 µm
	MM 50 µm / 125 µm
	SM 10 µm / 125 µm
Mating cycles	min. 750
Temperature range	-40 °C ... +70 °C
Housing material	Zinc die-cast, nickel plated

Identification	Part number	Drawing	Dimensions in mm
Han® PushPull SCRJ			
Panel feed through	09 35 242 0313		
SC contacts order separately			
SCRJ IP20 POF connector			
with fast termination	09 35 002 4002		
with crimp termination	09 35 002 4003		
Contacts			
SC POF contact, 1 mm	20 10 001 5217		
SC 125 GI contact	20 10 125 5211		
SC 230 HCS contact	20 10 230 5211		

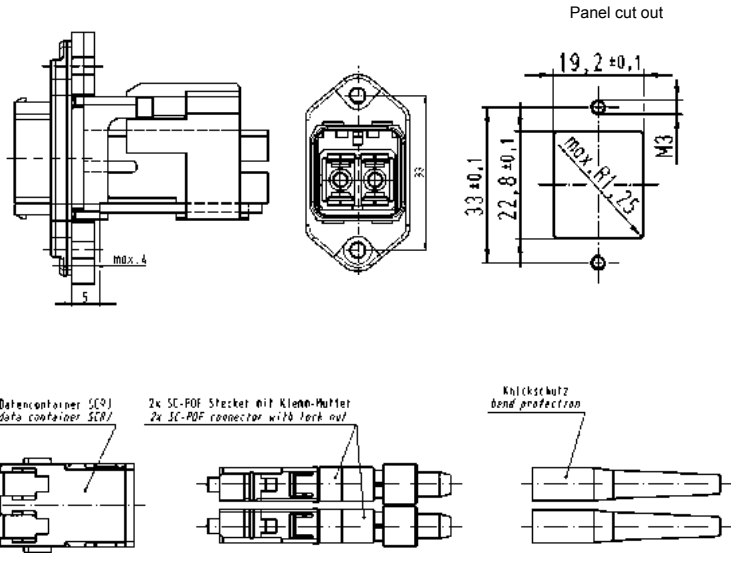

[1] POF = Polymer-Optical Fibre
[2] HCS® = Hard Clad Silica (registered trademark of SpecTran Corporation)

Han® PushPull SCRJ Metal

Han® PushPull, type acc. to IEC 61 076-3-117 variant 14
SCRJ connector with fast termination

Features

- HARTING PushPull technology
- Compact design
- High packing density
- Han® PushPull SCRJ for POF is according the requirements of AIDA (German Domestic Automobile Manufacturers)
- Field installable

Technical characteristics

Locking	PushPull technology
Degree of protection	IP65 / IP67
Mating face	SCRJ acc. to IEC 61 754-24
Fiber Typen	POF[1] 1 mm
	HCS®[2] 200 µm / 230 µm
	MM 62.5 µm / 125 µm
	MM 50 µm / 125 µm
	SM 10 µm / 125 µm
Mating cycles	min. 750
Temperature range	-40 °C ... +70 °C
Housing material	Zinc die-cast, nickel plated
Flammability acc. to UL 94	V0
Cable diameter	6.5 - 9.5 mm

Identification	Part number
Connector set, metal	
incl. housing and SCRJ insert, POF contacts	09 35 241 0401
PROFINET-Identification: PROFINET O-Plug SCRJ	09 35 241 0402
incl. housing and SCRJ insert SC contacts order separately	
SCRJ IP20 POF connector	09 35 002 4002
Protection cover IP65 / IP67	09 35 002 5411
Contacts	
SC POF contact, 1 mm	20 10 001 5217
SC 125 GI contact	20 10 125 5211
SC 230 HCS contact	20 10 230 5211

Drawing — Dimensions in mm

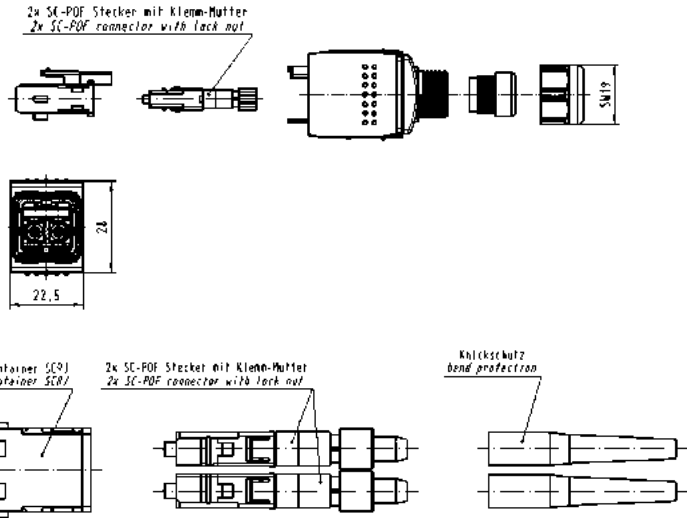

Tooling see page 02.57

[1] POF = Polymer-Optical Fibre
[2] HCS® = Hard Clad Silica (registered trademark of SpecTran Corporation)

Han® PushPull SCRJ Metal

Han® PushPull, type acc. to IEC 61076-3-117 variant 14
SCRJ crimp connector

Features

- HARTING PushPull technology
- Compact design
- High packing density
- Han® PushPull SCRJ for POF is according the requirements of AIDA (German Domestic Automobile Manufacturers)

Technical characteristics

Locking	PushPull technology
Degree of protection	IP65 / IP67
Mating face	SCRJ acc. to IEC 61754-24
Fiber Typen	POF[1] 980 µm / 1000 µm
Mating cycles	min. 750
Temperature range	-40 °C ... +70 °C
Housing material	Zinc die-cast, nickel plated
Flammability acc. to UL 94	V0
Cable diameter	6.5 - 9.5 mm

Identification	Part number	Drawing	Dimensions in mm
Connector set, metal incl. housing and SCRJ insert, POF crimp contacts	09 35 242 0401	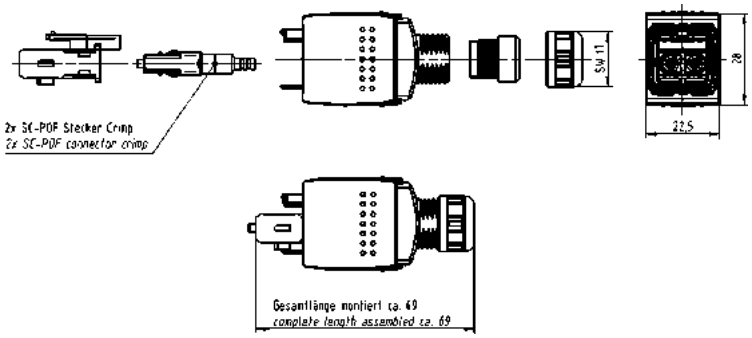	
SCRJ IP20 POF crimp connector	09 35 002 4003	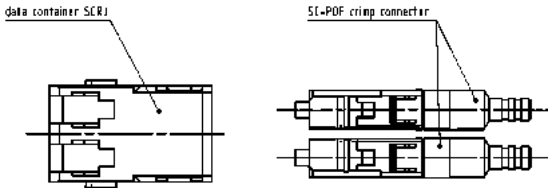	
Protection cover IP65 / IP67	09 35 002 5411		
Contacts SC POF crimp contact	20 10 001 5211		

Tooling see page 02.56

[1] POF = Polymer-Optical Fibre

Han® PushPull SCRJ Metal

Han® PushPull SCRJ Genderchanger Metal

Features

- High degree of protection IP65 / IP67
- Robust metal housing
- Standard PROFINET component of the German automotive production
- Allows usage of different cable types (Type B, C) e.g. in robots application
- Extension of cords according to PROFINET guideline

Technical characteristics

Locking	PushPull technology
Degree of protection	IP65 / IP67 (mated)
Mating face	SCRJ acc. to IEC 61 754-24
Fibre types	POF, GOF, HCS
Number of contacts	2
Mating cycles	min. 750
Temperature range	-40 °C ... +70 °C
Housing material	Zinc die-cast, nickel-plated
Dimensions	43.3 x 42 x 29 mm (unmated)
Mounting	Wall mountable with 2 screws (type M3)

Identification	Part number	Drawing	Dimensions in mm
Han® PushPull SCRJ Genderchanger metal	09 35 241 0501	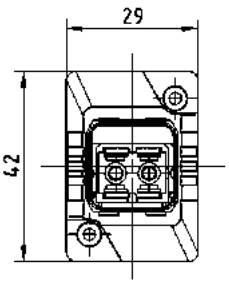	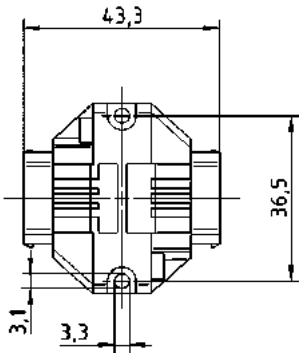

Han® PushPull SCRJ

Han® PushPull SCRJ POF crimp Assembly tools for polymer-optical fibres

Features

- Cable insulation (PUR / PVC) is stripped without damage
- The ‘crimping’ and ‘precision cutting’ operations are completed within the one tool
- Specialized cutting method with an automatically advancing round blade for an accurate cutting result requiring no final polishing
- Optical display indicating remaining operations
- Simultaneous crimping of two contacts (duplex handling)

Technical characteristics

Connector type	SCRJ crimp connector acc. to IEC 61754-24
Locking	PushPull technology acc. to IEC 61076-3-117 variant 14 (AIDA compliant)
Insertion loss	typically 1.5 to 2.0 dB
Termination SC contacts	Crimp termination technique
Fibre dimensions	POF 980 / 1000 µm
Fibre outer diameter	2.2 mm
Cable outer diameter	7 to 8.5 mm
No. of cutting operations	Maximum 1260

Identification	Part number	Drawing	Dimensions in mm
Assembly tool set for POF crimp cutting, without final polishing The set contains - one crimpping and cutting tool for 1260 operations - one sheath stripping tool - one Kevlar shear - one loading device for SC contacts Supplied in a robust plastic case	09 35 000 9915	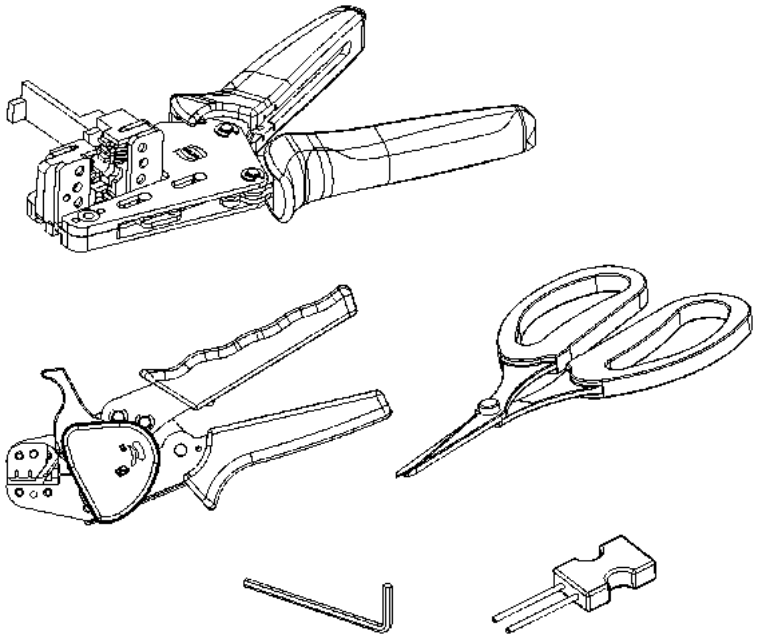	
Replacement cutting tool	09 35 000 9914		

Han® PushPull SCRJ

Han® PushPull SCRJ POF
Assembly tools for polymer-optical fibres

Features

- Cable insulation (PUR / PVC) is stripped without damage
- The ‘stripping’ and ‘precision cutting’ operations are completed within the one tool
- Specialized cutting method with an automatically advancing round blade for an accurate cutting result requiring no final polishing
- Optical display indicating remaining operations
- Simultaneous handling of twin fibers (duplex mode)

Technical characteristics

Connector type	SCRJ connector acc. to IEC 61754-24
Locking	PushPull technology acc. to IEC 61076-3-117 variant 14 (AIDA compliant)
Insertion loss	typically 1.5 to 2.0 dB
Termination SC contacts	Fast termination technique, reusable
Fibre dimensions	POF 980 / 1000 µm
Fibre outer diameter	2.2 mm
Cable outer diameter	7 to 8.5 mm
No. of cutting operations	Maximum 1260

Identification	Part number	Drawing	Dimensions in mm
Assembly tool set for POF cutting, without final polishing The set contains - one stripping and cutting tool for 1260 operations - one sheath stripping tool - one Kevlar shear - one positioner for SCRJ contacts Supplied in a robust plastic case	09 35 000 9913	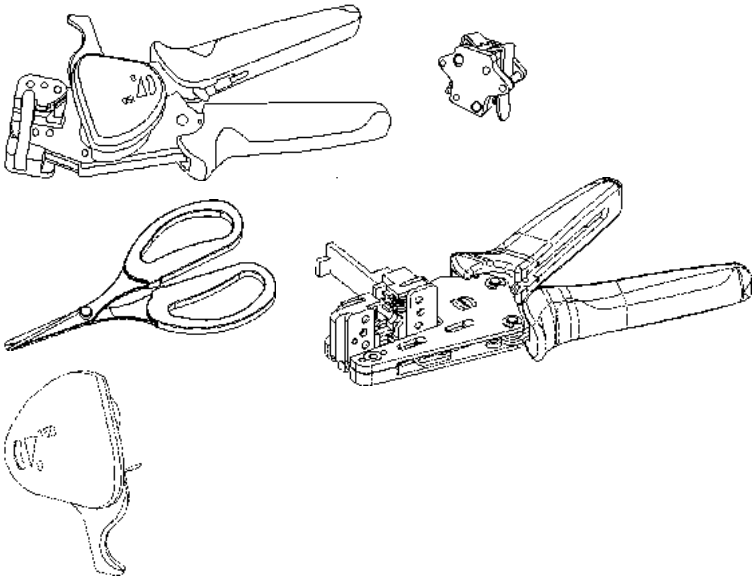	
Replacement cutting tool for 1260 operations	09 35 000 9914		
Assembly tool set for POF cutting, with final polishing			
Without an optical meter	20 99 000 3016		
With an optical meter	20 99 000 3013		
Polishing wheel (grinding wheel) for POF cables 2.2	20 99 000 1099	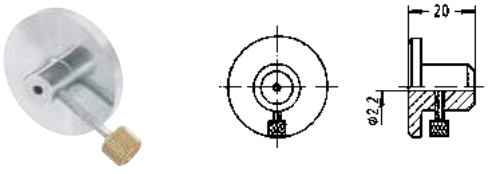	
Sand paper for POF, grain size 1000	20 80 001 9911		

Han® PushPull Signal

Han® PushPull, type acc. to IEC 61 076-3-117 variant 14
10-poles 50 V / 5 A

Features

- HARTING PushPull technology
- For the transmission of analog, low voltage and bus signals
- Fully shielded
- 10 contacts
- Touch-proof
- Easy and fast cable installation

Technical characteristics

Locking	PushPull technology acc. to IEC 61 076-3-117 variant 14
Degree of protection	IP65 / IP67
Mating face	acc. to IEC/PAS 61 076-3-119
Number of contacts	10
Electrical data acc. to DIN EN 61 984	5 A 50 V 1.5 kV 3
Contact resistance	10 mΩ
Termination	Crimp
Conductor cross section	AWG 24 … 18; 0.25 … 0.82 mm²
Conductor diameter	max. 2.1 mm
Outer cable diameter	6.5 … 9.5 mm / 4 … 11 mm
Shielding	Fully shielded, 360° shielding contact
Mating cycles	min. 500
Temperature range	-40 °C ... +70 °C
Housing material	Plastic, black Zinc die-cast, nickel-plated
Flammability acc. to UL 94	V0

Identification	Part number	Drawing	Dimensions in mm
Han® PushPull Signal Insert		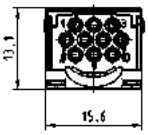 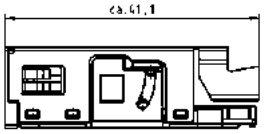 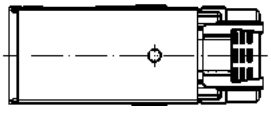	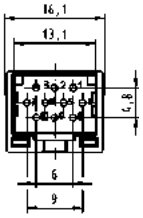
for panel feed-through HIFF, 10-poles incl. male insert	09 45 545 9010		
Order D-Sub crimp male contacts separately			
D-Sub crimp contacts for device side[3)]			
male, turned AWG 24-20; 0.25-0.56 mm²	09 67 000 8576[1)]		
male, turned AWG 22-18; 0.33-0.82 mm²	09 67 000 3576[1)]		
male, stamped AWG 24-20; 0.25-0.56 mm²	09 67 000 8178[2)]		

[1)] To be used with crimp tool 09 99 000 0501. Suitable locator: 09 99 000 0531
[2)] To be used with crimp tool 09 99 000 0175.
[3)] For all usable D-Sub contacts please see chapter 05.

Identification	Part number	Drawing	Dimensions in mm
Han® PushPull panel feed-through HIFF to hold the 10-poles insert		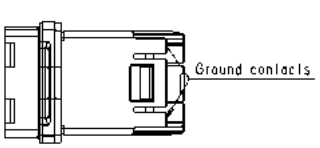	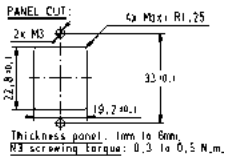
Metal rectangular	09 35 012 0311	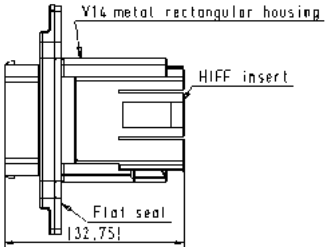	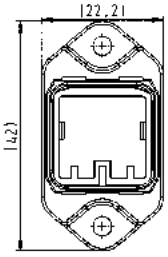
Metal circular	09 35 012 0312	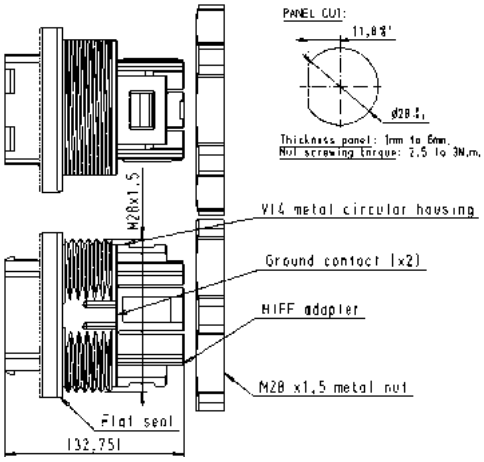	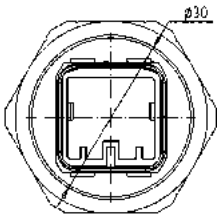
Plastic rectangular	09 35 012 0331	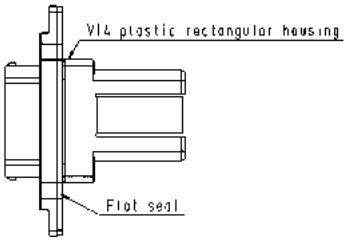	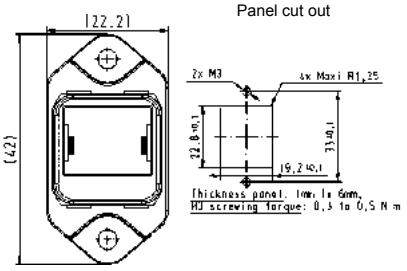
Han® PushPull Signal solder jack angled	09 35 002 6001	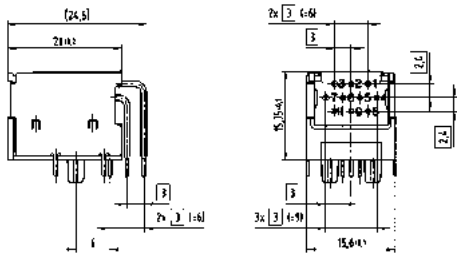	
Han® PushPull Signal solder jack straight suitable housings, bulkhead mounting	09 35 002 6002	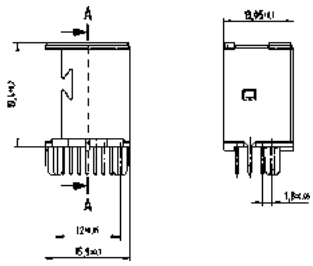	
Metal	09 35 002 0303		
Plastic	09 35 002 0323		

Han® PushPull Signal

Han® PushPull, type acc. to IEC 61 076-3-117 variant 14
10-poles 50 V / 5 A

Features

- HARTING PushPull technology
- For the transmission of analog, low voltage and bus signals
- Fully shielded
- 10 contacts
- Touch-proof
- Easy and fast cable installation

Technical characteristics

Locking	PushPull technology acc. to IEC 61 076-3-117 variant 14
Degree of protection	IP65 / IP67
Mating face	acc. to IEC/PAS 61 076-3-119
Number of contacts	10
Electrical data acc. to DIN EN 61 984	5 A 50 V 1.5 kV 3
Contact resistance	10 mΩ
Termination	Crimp
Conductor cross section	AWG 24 … 18; 0.25 … 0.82 mm²
Conductor diameter	max. 2.1 mm
Outer cable diameter	6.5 … 9.5 mm / 4 … 11 mm
Shielding	Fully shielded, 360° shielding contact
Mating cycles	min. 500
Temperature range	-40 °C ... +70 °C
Housing material	Plastic, black Zinc die-cast, nickel-plated
Flammability acc. to UL 94	V0

Identification	Part number
Han® PushPull Signal	
Connector set 10-poles incl. metal housing and female insert	
4 … 7 / 7 … 11 mm clamp range	09 35 261 0401
7 … 11 mm clamp range	09 35 262 0401
Connector set 10-poles incl. plastic housing and female insert	
6.5 … 9.5 mm clamp range	09 35 261 0421
Order D-Sub crimp female contacts separately	
D-Sub crimp contacts for cable side[3)]	
female, turned AWG 24-20; 0.25 - 0.52 mm²	09 67 000 8476[1)]
female, turned AWG 22-18; 0.33 - 0.82 mm²	09 67 000 3476[1)]
female, stamped AWG 24-20; 0.25 - 0.56 mm²	09 67 000 8278[2)]

Drawing

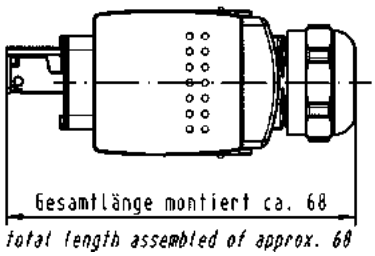

Dimensions in mm

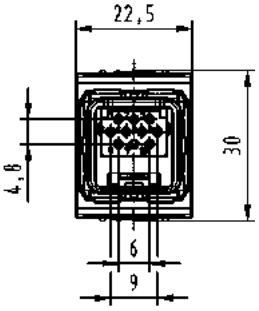

[1)] To be used with crimp tool 09 99 000 0501. Suitable locator: 09 99 000 0531
[2)] To be used with crimp tool 09 99 000 0175.
[3)] For all usable D-Sub contacts please see chapter 05.

Han® PushPull Power 4/0 Plastic

Han® PushPull, type acc. to IEC 61 076-3-118
Housing bulkhead mounting and power females for device integration

Features

- HARTING PushPull technology
- Compact, space-saving design
- Touch-proof
- Device side: male
  - Solder variant, angled and straight
- 4 times coding without contact loss

Technical characteristics

Locking	PushPull technology acc. to IEC 61 076-3-118
Degree of protection	IP65 / IP67
Number of contacts	4 + PE
Electrical data acc. to DIN EN 61 984	16 A 230/400 V 4 kV 3
Termination	Male insert with solder termination
Mating cycles	min. 500
Temperature range	-40 °C ... +70 °C
Housing material	Plastic, black
Flammability acc. to UL 94	V0

Identification	Part number	Drawing	Dimensions in mm
Components device side			
Housing bulkhead mounting plastic	09 35 002 0323	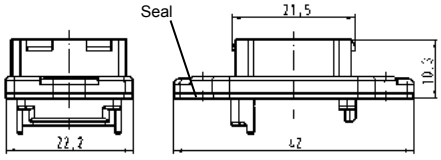	Panel cut out 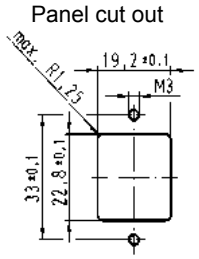
Protection cover IP65 / IP67	09 35 002 5402		
Coding pins	09 35 000 6190		
Male insert with solder termination angled	09 35 002 3003	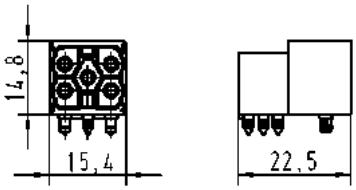	PCB layout 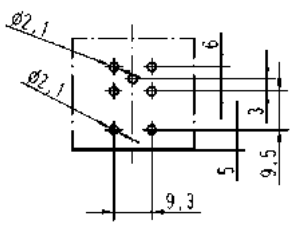
Male insert with solder termination straight	09 35 002 3004	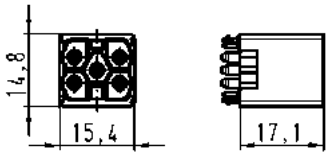	PCB layout 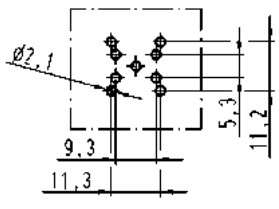

Han® PushPull Power 4/0 Plastic

Han-Quick Lock®

Han® PushPull, type acc. to IEC 61 076-3-118
Panel feed-through, 5-poles, 690 V, 16 A

Features

- HARTING PushPull technology
- Compact, space-saving design
- Touch-proof
- Panel feed-through: male
  - crimp termination
  - Han-Quick Lock® termination technology
- 4 times coding without contact loss
- NEW: Larger termination cross section for conductors 0.25 - 1.5 mm²

Technical characteristics

Locking	PushPull technology acc. to IEC 61 076-3-117 variant 14
Mating face	acc. to IEC 61 076-3-118
Degree of protection	IP65 / IP67
Number of contacts	4 + PE
Electrical data acc. to DIN EN 61 984	16 A 690 V 4 kV 3
Termination cross section	0.25 – 2.5 mm²
Mating cycles	min. 500
Temperature range	-40 °C ... +70 °C
Housing material	Plastic, black
Flammability acc. to UL 94	V0

Identification	Part number	Drawing	Dimensions in mm
Han® PushPull Power 4/0 Panel feed-through 5-poles, 690 V / 16 A incl. bulkhead housing and male insert			
with crimp termination (Order crimp male contacts separately)	09 35 231 0331	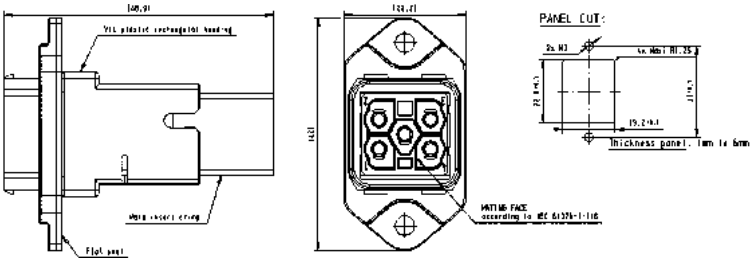	
with Han-Quick Lock® termination			
0.5 … 2.5 mm²	09 35 232 0331	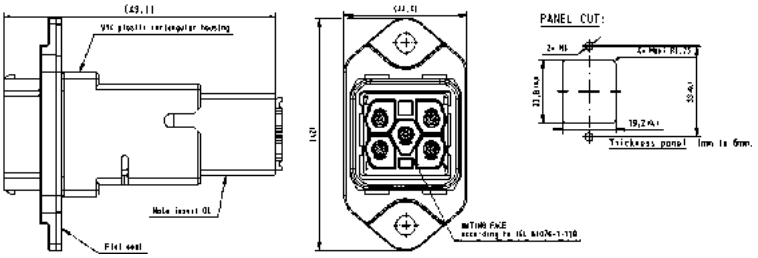	
0.25 … 1.5 mm²	09 35 234 0331		
Coding element 10 pieces each for device and cable side enables 4 times coding without contact loss	09 35 000 6190		

Han® PushPull Power 4/0 Plastic

Han-Quick Lock®

Han® PushPull, type acc. to IEC 61 076-3-118
Panel feed-through, 5-poles, 690 V, 16 A

Features

- HARTING PushPull technology
- Compact, space-saving design
- Touch-proof
- Panel feed-through: male
  - crimp termination
  - Han-Quick Lock® termination technology
- 4 times coding without contact loss
- NEW: Larger termination cross section for conductors 0.25 - 1.5 mm²

Technical characteristics

Locking	PushPull technology acc. to IEC 61 076-3-117 variant 14
Mating face	acc. to IEC 61 076-3-118
Degree of protection	IP65 / IP67
Number of contacts	4 + PE
Electrical data acc. to DIN EN 61 984	16 A 690 V 4 kV 3
Termination cross section	0.25 – 2.5 mm²
Mating cycles	min. 500
Temperature range	-40 °C ... +70 °C
Housing material	Plastic, black
Flammability acc. to UL 94	V0

Identification	Part number
Han® PushPull Power 4/0 Panel feed-through M25 5-poles, 690 V / 16 A incl. bulkhead housing and male insert, circular panel cut out	
with crimp termination (Order crimp male contacts separately)	09 35 231 0332
with Han-Quick Lock® termination	
0.5 … 2.5 mm²	09 35 232 0332
0.25 … 1.5 mm²	09 35 234 0332
Coding element 10 pieces each for device and cable side enables 4 times coding without contact loss	09 35 000 6190

Drawing — Dimensions in mm

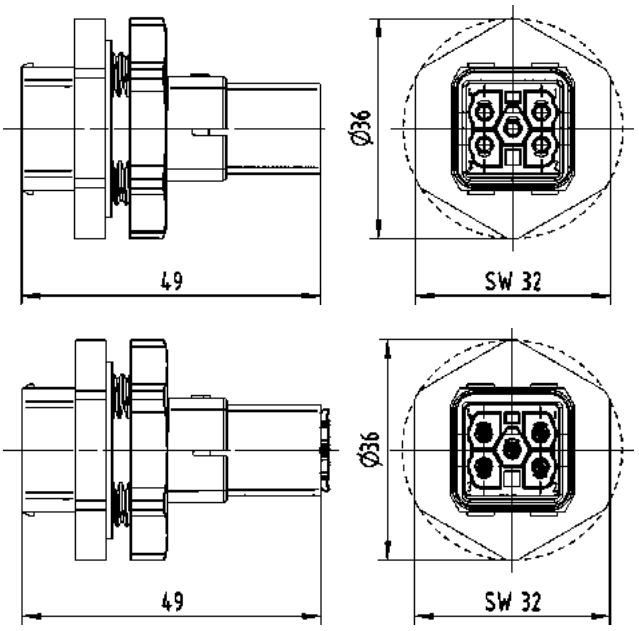

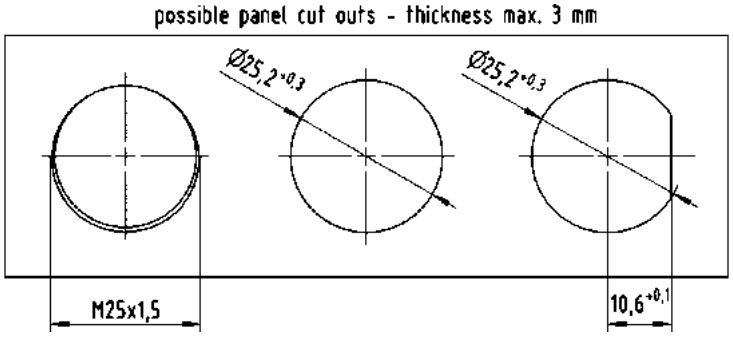

Han® PushPull Power 4/0 Plastic

Han-Quick Lock®

Han® PushPull, type acc. to IEC 61 076-3-118
Connector, 5-poles, 690 V, 16 A

Features

- HARTING PushPull technology
- Compact, space-saving design
- Touch-proof
- Cable side: female
  - crimp termination
  - Han-Quick Lock® termination technology
    Field-assembly without special tools
- 4 times coding without contact loss
- NEW: Larger termination cross section
  for conductors 0.25 - 1.5 mm²

Technical characteristics

Locking	PushPull technology acc. to IEC 61 076-3-117 variant 14
Mating face	acc. to IEC 61 076-3-118
Degree of protection	IP65 / IP67
Number of contacts	4 + PE
Electrical data acc. to DIN EN 61 984	16 A 690 V 4 kV 3
Termination cross section	0.25 – 2.5 mm²
Mating cycles	min. 500
Temperature range	-40 °C ... +70 °C
Housing material	Plastic, black
Flammability acc. to UL 94	V0

Identification	Part number	Drawing	Dimensions in mm
Connector set, plastic incl. housing and female insert			
with crimp termination 9 – 13 mm clamp range Han® P crimp contacts order separately	09 35 231 0423	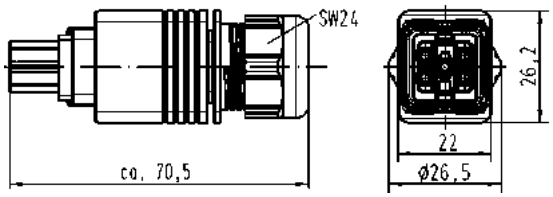	
with Han-Quick Lock® termination 9 – 13 mm clamp range for termination cross section 0.5 - 2.5 mm²	09 35 232 0423		
with Han-Quick Lock® termination 6.5 – 9.5 mm clamp range for termination cross section 0.5 - 2.5 mm² for termination cross section 0.25 - 1.5 mm²	09 35 232 0421 09 35 234 0421	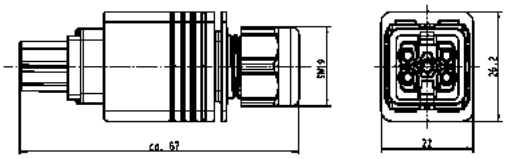	
Protection cover IP65 / IP67	09 35 002 5411		
Coding pins	09 35 000 6190		

Han® PushPull Power 4/0 Metal

Han® PushPull, type acc. to IEC 61 076-3-118
Housing bulkhead mounting and power females for device integration

Features

- HARTING PushPull technology
- Compact, space-saving design
- Touch-proof
- Device side: male
  - Solder variant, angled and straight
- 4 times coding without contact loss

Technical characteristics

Locking	PushPull technology acc. to IEC 61 076-3-118
Degree of protection	IP65 / IP67
Number of contacts	4 + PE
Electrical data acc. to DIN EN 61 984	16 A 690 V 4 kV 3
Termination	Male insert with solder termination
Mating cycles	min. 500
Temperature range	-40 °C ... +70 °C
Flammability acc. to UL 94	V0
Housing material	Zinc die-cast, nickel plated Plastic, black (female)

Identification	Part number	Drawing	Dimensions in mm
Components device side			
Housing bulkhead mounting metal	09 35 002 0303	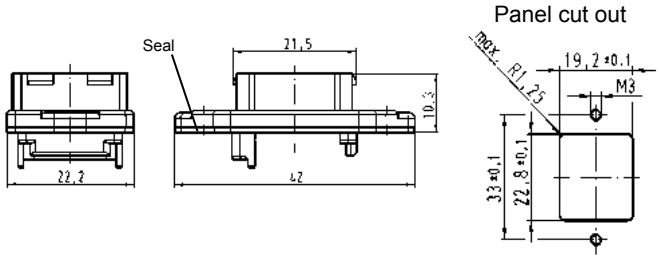	
Protection cover IP65 / IP67	09 35 002 5402		
Coding pins	09 35 000 6190		
Male insert with solder termination angled	09 35 002 3003	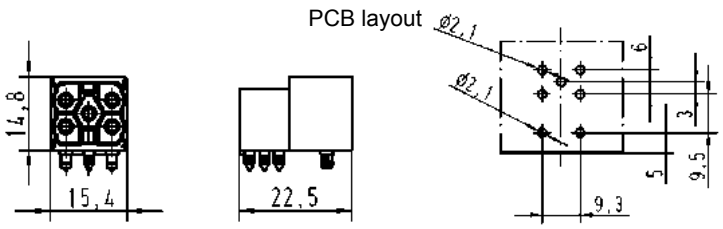	
Male insert with solder termination straight	09 35 002 3004	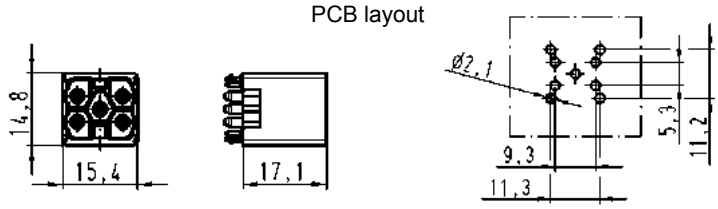	

Han® PushPull Power 4/0 Metal

Han® PushPull, type acc. to IEC 61 076-3-118
Panel feed-through, 5-poles, 690 V, 16 A

Features

- HARTING PushPull technology
- Compact, space-saving design
- Touch-proof
- Panel feed-through: male
  - crimp termination
  - Han-Quick Lock® termination technology
- 4 times coding without contact loss
- NEW: Larger termination cross section for conductors 0.25 - 1.5 mm²

Technical characteristics

Locking	PushPull technology acc. to IEC 61 076-3-117 variant 14
Mating face	acc. to IEC 61 076-3-118
Degree of protection	IP65 / IP67
Number of contacts	4 + PE
Electrical data acc. to DIN EN 61 984	16 A 690 V 4 kV 3
Termination cross section	0.25 – 2.5 mm²
Mating cycles	min. 500
Temperature range	-40 °C ... +70 °C
Housing material	Zinc die-cast, nickel-plated
Flammability acc. to UL 94	V0

Identification	Part number	Drawing	Dimensions in mm
Han® PushPull Power 4/0 Panel feed-through 5-poles, 690 V / 16 A incl. bulkhead housing and male insert			
Rectangular panel cut out			
with crimp termination (Order crimp male contacts separately)	09 35 231 0311		
with Han-Quick Lock® termination			
0.5 … 2.5 mm²	09 35 232 0311		
0.25 … 1.5 mm²	09 35 234 0311		
Circular panel cut out			
with crimp termination (Order crimp male contacts separately)	09 35 231 0312		
with Han-Quick Lock® termination			
0.5 … 2.5 mm²	09 35 232 0312		
0.25 … 1.5 mm²	09 35 234 0312		
Coding element 10 pieces each for device and cable side enables 4 times coding without contact loss	09 35 000 6190		

Han® PushPull, type acc. to IEC 61 076-3-118
Connector, 5-poles, 690 V, 16 A

Features

- HARTING PushPull technology
- Compact, space-saving design
- Touch-proof
- Cable side: female
  - crimp termination
  - Han-Quick Lock® termination technology
    Field-assembly without special tools
- 4 times coding without contact loss
- NEW: Larger termination cross section
  for conductors 0.25 - 1.5 mm²

Technical characteristics

Locking	PushPull technology acc. to IEC 61 076-3-117 variant 14
Mating face	acc. to IEC 61 076-3-118
Degree of protection	IP65 / IP67
Number of contacts	4 + PE
Electrical data acc. to DIN EN 61 984	16 A 690 V 4 kV 3
Termination cross section	0.25 – 2.5 mm²
Mating cycles	min. 500
Temperature range	-40 °C ... +70 °C
Housing material	Zinc die-cast, nickel-plated
Flammability acc. to UL 94	V0

Identification	Part number	Drawing	Dimensions in mm
Connector set, metal incl. housing and female insert			
with crimp termination 4 – 11 mm clamp range Han® P crimp contacts order separately	09 35 231 0401		
with Han-Quick Lock® termination 4 – 11 mm clamp range			
for termination cross section 0.5 - 2.5 mm²	09 35 232 0401		
for termination cross section 0.25 - 1.5 mm²	09 35 234 0401		
Protection cover IP65 / IP67	09 35 002 5411		
Coding pins	09 35 000 6190		

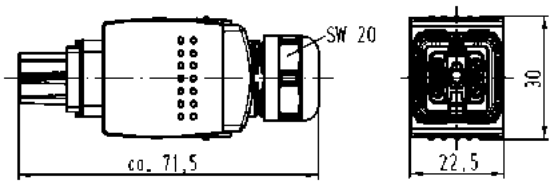

Han® PushPull, type acc. to IEC 61 076-3-118 variant 14
Accessories

Identification	Part number	Drawing	Dimensions in mm
Crimping tool	09 99 000 0888		
Locator Han P® for crimping tool 09 99 000 0888	09 99 000 0886		
Removal tool Han P®	09 99 000 0319		
Coding pins for 4 times coding without contact loss	09 35 000 6190	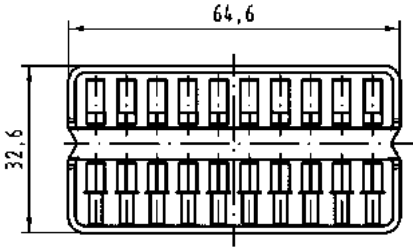	

Identification	Part number Male contact	Part number Female contact	Drawing	Dimensions in mm
Crimp contacts Han® P silver plated			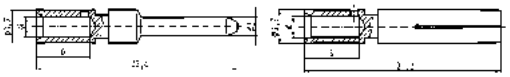	
for 0.5 mm²	09 35 000 6103	09 35 000 6203		
for 0.75 mm²	09 35 000 6104	09 35 000 6204		
for 1.0 mm²	09 35 000 6105	09 35 000 6205		
for 1.5 mm²	09 35 000 6106	09 35 000 6206		
for 2.5 mm²	09 35 000 6107	09 35 000 6207		

Wire gauge		Ø	Stripping length
for 0.5 mm²	AWG 20	1.15 mm	6 mm
for 0.75 mm²	AWG 18	1.30 mm	6 mm
for 1.0 mm²	AWG 18	1.45 mm	6 mm
for 1.5 mm²	AWG 16	1.75 mm	6 mm
for 2.5 mm²	AWG 14	2.25 mm	6 mm

Han® PushPull Power 4/0

Han® PushPull, type acc. to IEC 61 076-3-117 variant 14
cable to cable housing

Features

- HARTING PushPull technology
- Ideal for prototyping
- Can be combined with panel feed-throughs for power, data and signal

Technical characteristics

Locking	PushPull technology acc. to IEC 61 076-3-117 variant 14
Degree of protection	IP65 / IP67
Outer cable diameter	6.5 … 9.5 mm / 9 … 13 mm
Mating cycles	min. 750
Temperature range	-40 °C ... +70 °C
Housing material	Plastic, black
Flammability acc. to UL 94	V0

Identification	Part number	Drawing	Dimensions in mm
Han® PushPull cable to cable housings, plastic (Order housing bulkhead mounting and insert separately)			
for outer cable diameter 6.5 … 9.5 mm	09 35 002 0431		
for outer cable diameter 9 … 13 mm	09 35 002 0433		
Suitable bulkhead housing, plastic			
for power, 5-poles, 690 V / 16 A, incl. housing bulkhead mounting and insert			
with crimp termination (Order Han® P crimp male contacts separately)	09 35 231 0331		
with Han-Quick Lock® termination			
0.5 … 2.5 mm²	09 35 232 0331		
0.25 … 1.5 mm²	09 35 234 0331		
Coding element power			
10 pieces each for device and cable side	09 35 000 6190		

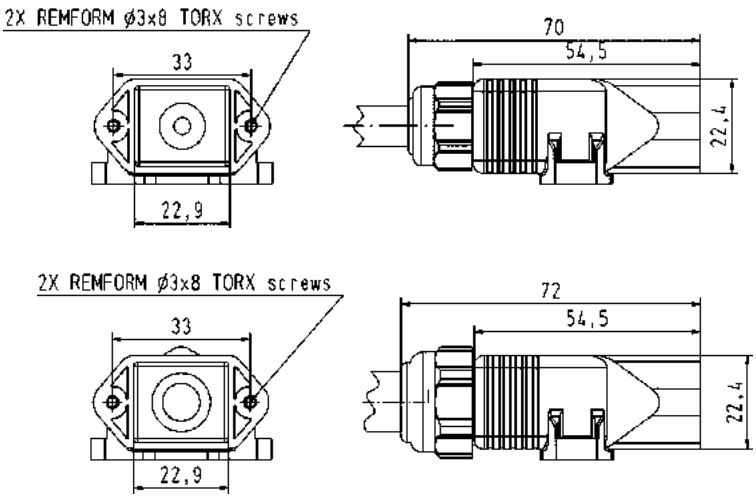

Han® PushPull L Power 4/0 Plastic

Housing bulkhead mounting and power females for device integration

Features

- HARTING PushPull technology
- Touch-proof
- Device side: male
  - Solder variant, angled and straight
- AIDA-conform
  (German Domestic Automobile Manufactures)

Technical characteristics

Locking	PushPull technology
Degree of protection	IP65 / IP67
Number of contacts	4 + PE
Electrical data	
acc. to DIN EN 61984	16 A 24 V 4 kV 3
Termination	Male insert with solder termination
Mating cycles	min. 500
Temperature range	-40 °C ... +70 °C
Housing material	Plastic, black
Flammability acc. to UL 94	V0

Identification	Part number	Drawing	Dimensions in mm
Components device side			
Housing bulkhead mounting plastic	09 35 004 0321	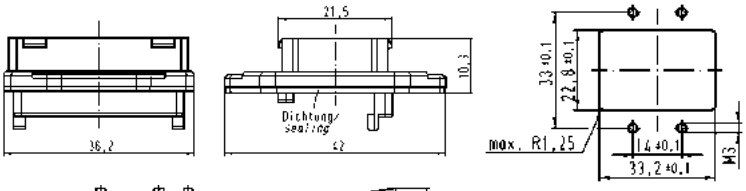	
Male insert with solder termination angled	09 35 004 3003	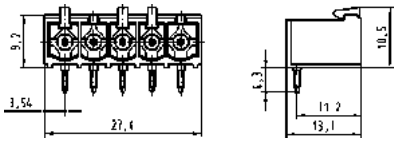	
Male insert with solder termination straight	09 35 004 3004	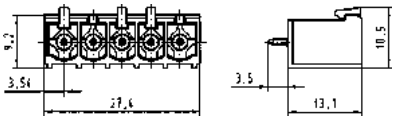	
Panel feed-through, plastic incl. housing and male insert with spring force connection	09 35 431 0331	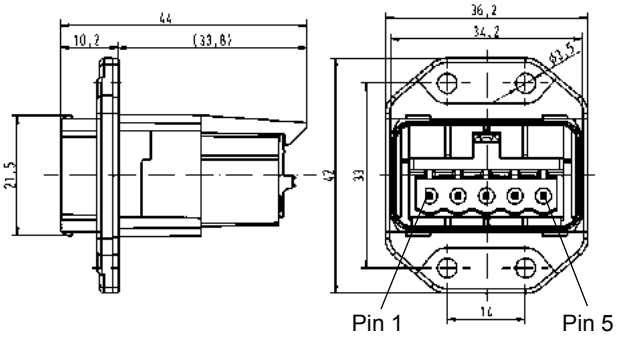	
Protection cover IP65 / IP67	09 35 004 5411		

Han® PushPull L Power 4/0 Plastic

Connector, 5-poles, 24 V, 16 A

Features

- HARTING PushPull technology
- Touch-proof
- Cable side: female
  - spring force connection
- AIDA-conform
  (German Domestic Automobile Manufactures)

Technical characteristics

Locking	PushPull technology
Degree of protection	IP65 / IP67
Number of contacts	4 + PE
Electrical data	
acc. to DIN EN 61 984	16 A 24 V 4 kV 3
Termination	Spring force connection
Termination cross section	0.75 ... 2.5 mm²
Mating cycles	min. 500
Temperature range	-40 °C ... +70 °C
Cable diameter	9 – 13 mm
Housing material	Plastic, black
Flammability acc. to UL 94	V0

Identification	Part number	Drawing	Dimensions in mm
Connector set, plastic incl. housing and female insert with spring force connection	09 35 431 0421	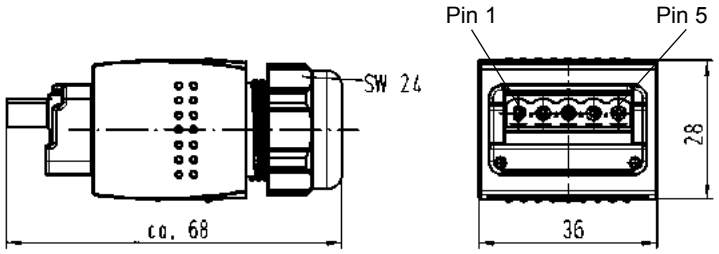	
Protection cover IP65 / IP67	09 35 002 5411		

Han® PushPull L Power 4/0 Metal

Housing bulkhead mounting and power females for device integration

Features

- HARTING PushPull technology
- Touch-proof
- Device side: male
  - Solder variant, angled and straight
- AIDA-conform
  (German Domestic Automobile Manufactures)

Technical characteristics

Locking	PushPull technology
Degree of protection	IP65 / IP67
Number of contacts	4 + PE
Electrical data acc. to DIN EN 61984	16 A 24 V 4 kV
Termination	Male insert with solder termination
Mating cycles	min. 500
Temperature range	-40 °C ... +70 °C
Housing material	Zinc die-cast, nickel plated Plastic, black (female)

Identification	Part number	Drawing	Dimensions in mm
Components device side			
Housing bulkhead mounting metal	09 35 004 0301	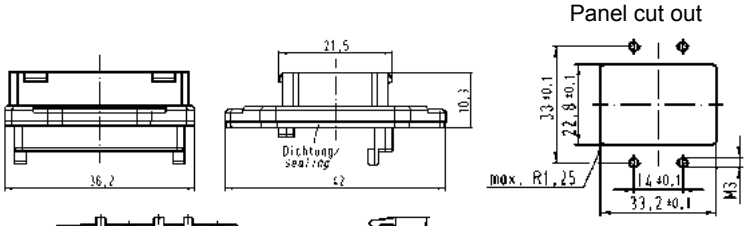	
Male insert with solder termination angled and with fixed coding	09 35 004 3003	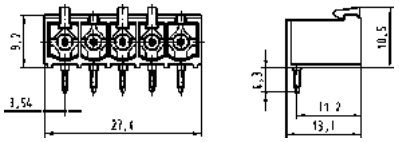	
Male insert with solder termination straight and with fixed coding	09 35 004 3004	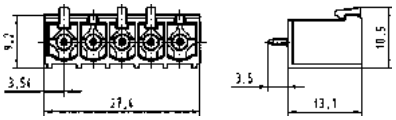	
Panel feed-through, metal			
incl. housing and male insert with spring force connection and			
with fixed coding	09 35 431 0311	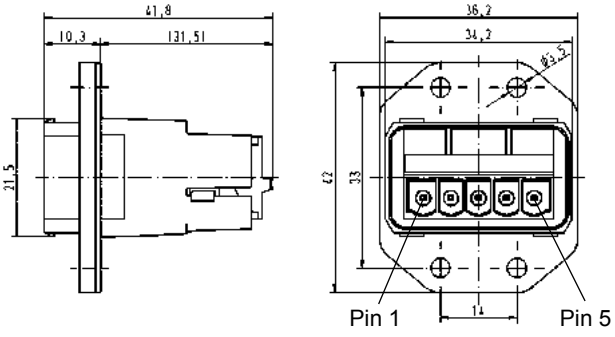	
with variable coding	09 35 431 0313		
Protection cover IP65 / IP67	09 35 004 5401		

Han® PushPull L Power 4/0 Metal

Han® PushPull L Power 4/0 Genderchanger Metal
Han® PushPull L Power 4/0 H-distributor Metal

Features

- High degree of protection IP65 / IP67
- Robust metal housing
- Standard PROFINET component of the German automotive production
- Allows usage of different cable types (Type B,C) e.g. in robots application
- Extension of cords according to PROFINET guideline
- 4-way-distribution of power signals

Technical characteristics

Connector	Han® PushPull L Power 4/0
Locking	PushPull technology
Electrical transmission	16 A / 24 V
Number of contacts	5
Mating cycles	min. 500
Housing material	Aluminium anodized
Dimensions	83.4 x 62 x 40.7 mm (unmated)
Degree of protection acc. to DIN 60529	IP65 / IP67 (mated)
Mounting	Wall mountable with 4 screws (type M5)
Temperature range	-20 °C … +50 °C
Maximum permissible humidity	30 % ... 95 % (no condensation)

Identification	Part number	Drawing	Dimensions in mm
Han® PushPull L Power 4/0 Genderchanger metal including housing and printed board with 2 x male insert with solder termination	09 35 431 0501	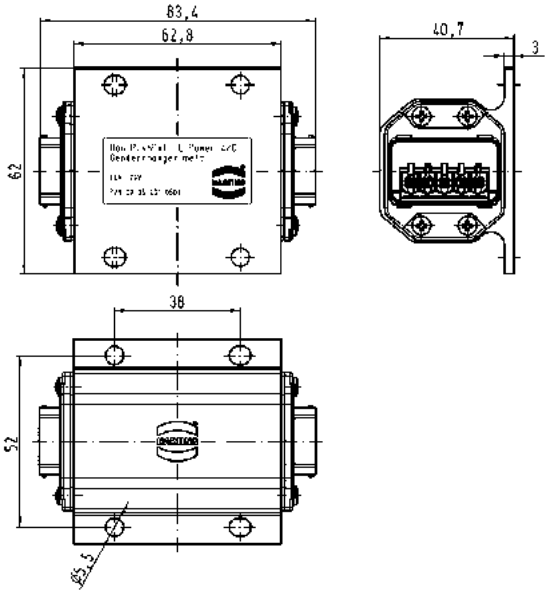	
Han® PushPull L Power 4/0 AIDA H-distributor 4-way metal including housing and printed board with 4 x male insert with solder termination	61 12 204 0001	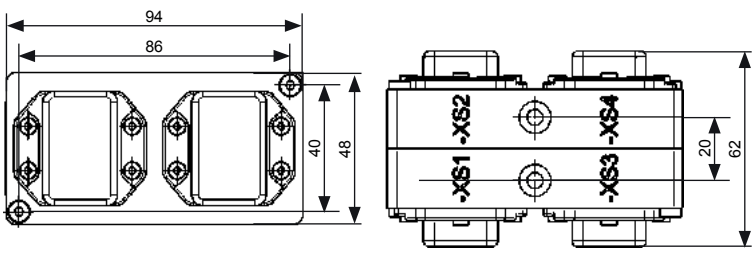	

Han® PushPull L Power 4/0 Metal

Han® PushPull L Power 4/0 Coupling Metal

Features

- High degree of protection IP65 / IP67
- Robust metal housing
- Standard PROFINET component of the German automotive production
- Extension of cords according to PROFINET guideline
- For an easy robot termination and a fast exchange of tube packages

Technical characteristics

Locking	PushPull technology
Electrical transmission	16 A / 24 V
Number of contacts	5
Mating cycles	min. 500
Housing material	Aluminium die-cast
Degree of protection acc. to DIN 60529	IP65 / IP67
Temperature range	-40 °C … +70 °C

Identification	Part number	Drawing	Dimensions in mm
Han® PushPull L Power 4/0 Coupling metal including housing, contact insert Power L, bulkhead housing and cable gland	61 04 201 1085	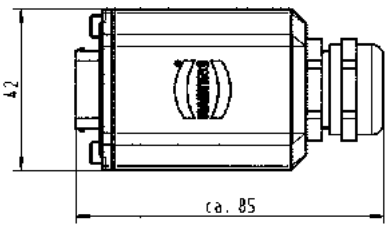	
		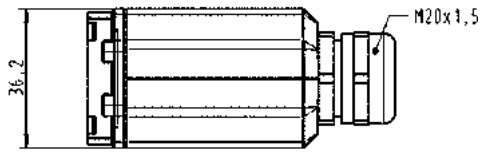	
Fixing flange	61 04 600 0183	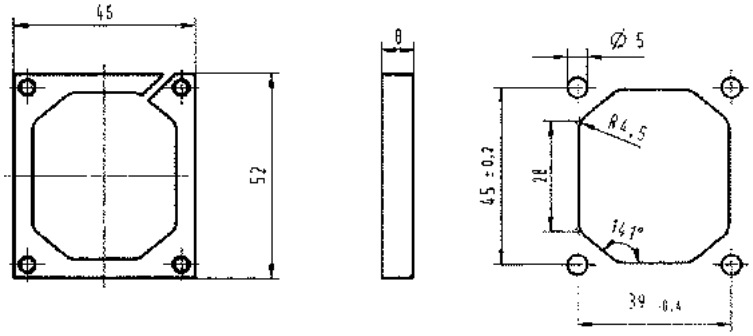	

Han® PushPull L Power 4/0 Metal

Connector, 5-poles, 24 V, 16 A

Features

- HARTING PushPull technology
- Robust design
- Cable side: female
  - spring force connection
- AIDA-conform
  (German Domestic Automobile Manufactures)
- Enlarged size for an optimized connection of 2.5 mm² conductor cross sections

Technical characteristics

Locking	PushPull technology
Degree of protection	IP65 / IP67
Number of contacts	4 + PE
Electrical data	
acc. to DIN EN 61 984	16 A 24 V 4 kV 3
Termination	Spring force connection
Termination cross section	0.75 ... 2.5 mm²
Mating cycles	min. 100
Temperature range	-40 °C ... +70 °C
Cable diameter	9 - 13 mm
Housing material	Zinc die-cast, nickel plated

Identification	Part number	Drawing	Dimensions in mm
Connector set, metal			
incl. housing and female insert with spring force connection and			
with fixed coding			
9 - 13 mm clamp range	09 35 433 0401		
with variable coding			
9 - 13 mm clamp range	09 35 434 0401		
Protection cover IP65 / IP67	09 35 002 5411		

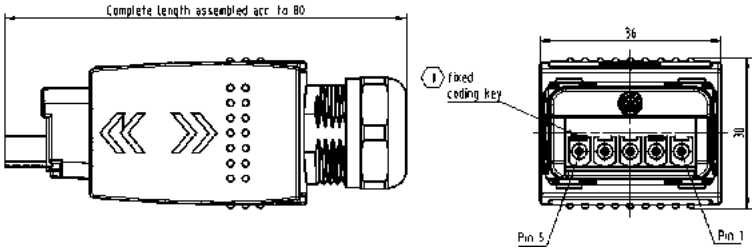

03. Circular Connectors

Circular connectors represent a widespread industrial standard for wiring sensors and actuators installed in the field. HARTING offers a portfolio of circular connectors with M8, M12, M 23, 7/8" thread and Han-Max® which are attuned to meet the requirements of industrial applications. In addition to the ready-to-use system cables, HARTING offers connectors equipped with *HARAX®* quick connection technology for in situ field assembly.
In addition, HARTING is continuing the development of enhanced circular connectors for new applications. HARTING is offering the M12 connector for the electrical and optical cabling for Fast Ethernet applications.

Application profile:

CONNECTION TYPE		ENVIRONMENT		APPLICATION						
Board to Board	Cable/ Wire to Board	IP20	IP65 / IP67	Data	Signal	Power	high performance			
							Data transfer rate	Shielding	Number of contacts, contact density	Voltage, working current
	●		●	●	●			●		

Cable termination

Han-Quick Lock® | *IDC HARAX®* | *Crimp*

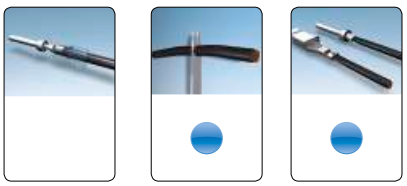

Screw | *Cage clamp* | *Axial screw*

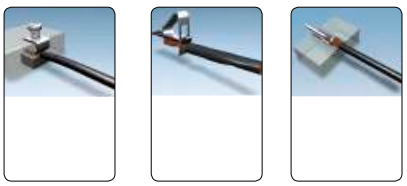

PCB termination

THT | *SMC* | *SMT*

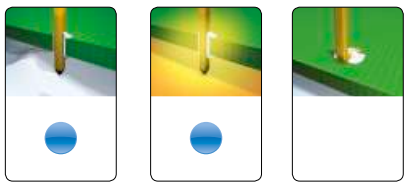

Press-in

Application standard

DeviceNet | EtherNet/IP | PROFIBUS | PROFINET | CANopen | ETHERNET POWERLINK | EtherCAT Technology Group

Housing integration

Separate housing | *Integrated housing*

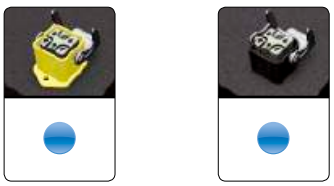

Contents

	Page
M8	**03.08**
M12 A coded	**03.20**
M12 B coded	**03.58**
M12 D coded	**03.80**
har-speed M12 data connectors X coded	**03.105**
M12 PushPull	**03.116**
INOX – Solutions for extreme demands	**03.126**
M12 with conduit	**03.130**
7/8“ *HARAX*®	**03.132**
HARAX® panel feed-through	**03.142**
Han-Max®	03.147

03. Circular Connectors

Standardized circular connectors with M8, M12, M 23, 7/8“ thread and Han-Max® are in widespread use in the installation of machines and systems.
HARTING offers a portfolio of angled and straight M8, M12, Han® R 23 and 7/8” connectors which are attuned to meet all relevant automation requirements. The housings are available as plastic and as metal variant. In addition to the standard circular connectors for sensors/actuators, HARTING is offering standardized circular connectors such as the M12 and Han-Max® variants to meet the special requirements of communication technology (Ethernet, Ethernet/IP, PROFINET, PROFIBUS, Devicenet and CAN).

The HARTING product range comprises connectors, ready-to-use patch cables and corresponding accessories.

The easy-to-handle *HARAX*® quick connection technology is available for the in situ assembly of M8 and M12 connectors and does not require the use of special tools. The portfolio of circular connectors is rounded off by the Han® R 23 connector family. HARTING’s comprehensive and user-friendly circular connector range enables cost-effective and quick realization of all wiring and communication tasks in automation projects.

APPLIANCE INTEGRATION:

In order to support the implementation of appliances with degree of protection IP65 / IP67, HARTING offers panel feed-through devices with ready-to use patch cables and female contact modules for direct mounting on PCBs.

Special series features

QUICK CONNECTION WITH *HARAX*®:

The HARTING *HARAX*® quick connection technology is an ideal solution for the in situ assembly of M8/M12 connectors.
Users only have to strip the cable insulation, insert the conductors, and screw the connector together in order to produce a gas-proof and vibration resistant connection.
HARAX® is a universal technology deployed in diverse connector series to wire data, signal and power lines and represents the current standard connection for Fieldbus and Fast Ethernet.

ASSEMBLED SYSTEM CABLES:

HARTING offers a comprehensive range of ready-to-use M8/M12 system cables for the quick wiring of sensors and actuators. HARTING also offers ready-to-use and tested system cables for special Ethernet communication such as PROFINET and Ethernet/IP.
HARTING also provides custom patch cables which are also available as overmoulded versions. The range of solutions comprises shielded and non-shielded cables with diverse structures, as required in drag chain applications, for example.

M12 FEMALE SOCKETS FOR PCB MOUNTING:

Straight and angled contact inserts are available for direct soldering on PCBs. HARTING has developed special shielded contact inserts category 5 to ISO/IEC 11801 for Ethernet technology which meet the stringent requirements for railway applications.

Notes

Specifications

IEC 60 352-4, IEC 61 076-2-104, IEC 61 076-2-101, IEC 61 076-2-109,

M8 circular connectors, mating face acc. to IEC 61 076-2-104

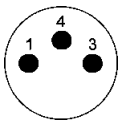

Male, 3 poles

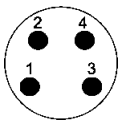

Male, 4 poles

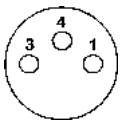

Female, 3 poles

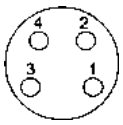

Female, 4 poles

M12 circular connectors, mating face acc. to IEC 61 076-2-101

A-coding

Male, 3 poles

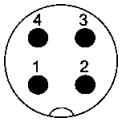

Male, 4 poles

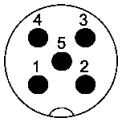

Male, 5 poles

Male, 8 poles

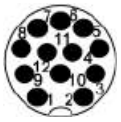

Male, 12 poles

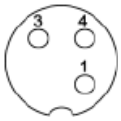

Female, 3 poles

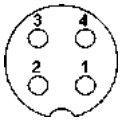

Female, 4 poles

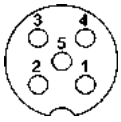

Female, 5 poles

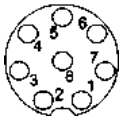

Female, 8 poles

Female, 12 poles

B-coding

Male, 4 poles

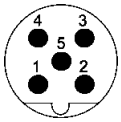

Male, 5 poles

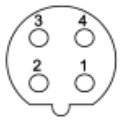

Female, 4 poles

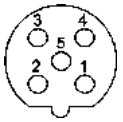

Female, 5 poles

D-coding

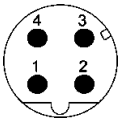

Male, 4 poles

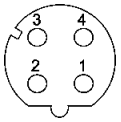

Female, 4 poles

X-coding, mating face acc. to IEC 61 076-2-109

Male, 8 poles

Female, 8 poles

7/8“

Male, 2 + PE

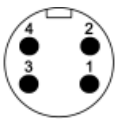

Male, 4 poles

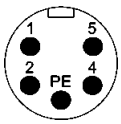

Male, 4 + PE

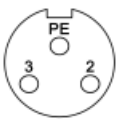

Female, 2 + PE

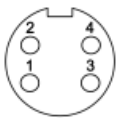

Female, 4 poles

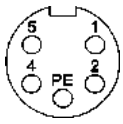

Female, 4 + PE

X-coding, mating face acc. to IEC 61076-2-109

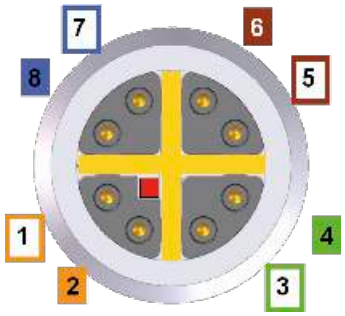

8 poles pin assignment

Signals		Pin assignment			Cable		
1/10Gbit	10/100 Mbit	RJ45	M12 D-coded	M12 X-coded	4-wire	568A	568B
BI_DA+	TxData+	1	1	1	yellow	white/green	white/orange
BI_DA-	TxData-	2	3	2	orange	green	orange
BI_DB+	RxData+	3	2	3	white	white/orange	white/green
BI_DC+	-	4	-	8		blue	blue
BI_DC-	-	5	-	7		white/blue	white/blue
BI_DB-	RxData-	6	4	4	blue	orange	green
BI_DD+	-	7	-	5		white/brown	white/brown
BI_DD-	-	8	-	6		brown	brown

Adapter M12/RJ45

4 poles pin assignment

10/100 Mbit	RJ45	M12 D-coded	4-wire
TxData+	1	1	yellow
TxData-	2	3	orange
RxData+	3	2	white
RxData-	6	4	blue

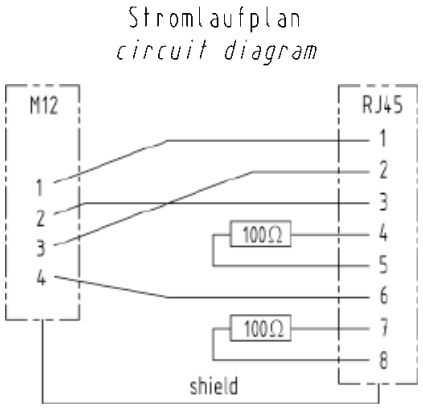

Adapter M12/RJ45

8 poles pin assignment

M12	RJ45
1	1
2	2
3	3
4	6
5	7
6	8
7	5
8	4

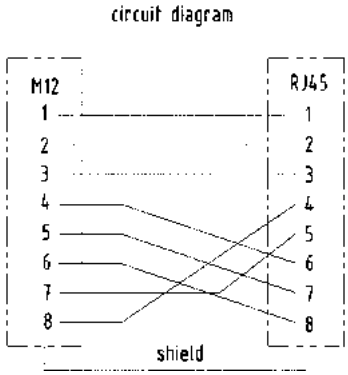

Gender changer

4 poles

schematic diagram

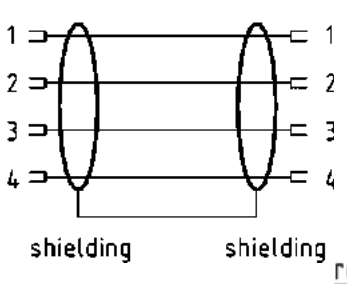

4 poles / 8 poles

schematic diagram

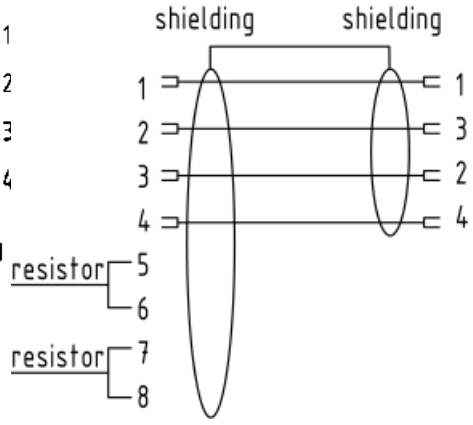

8 poles

schematic diagram

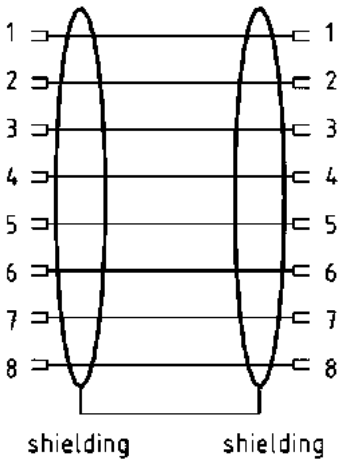

M8 *HARAX*® cable connector

Specifications IEC 60 352-4

Approval

Mating face

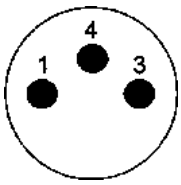

A-coding
Mating face
acc. to IEC 61 076-2-101

Technical characteristics M8 *HARAX*®

Type M8	***HARAX*® M8-XS**	***HARAX*® M8-S**
General data		
Conductor cross section	0.1 - 0.14 mm² AWG 27-26	0.14 - 0.34 mm² AWG 26-22
Diameter of individual strands	≥ 0.05 mm	≥ 0.1 mm
Conductor insulation material	PVC / PP / TPE	PVC / PP / TPE
Conductor diameter	0.6 - 1.0 mm	1.0 - 1.6 mm
Cable diameter	1.9 - 2.5 mm 2.5 - 3.5 mm	2.5 - 5.1 mm
Temperature range	-40 °C … +85 °C	-40 °C … +85 °C
Temperature during connection	-5 °C … +50 °C	-5 °C … +50 °C
Degree of protection	IP67	IP67
Mating cycles	100	100
Recommended tightening torque / Hexagonal wrench	0.4 Nm / SW 9	0.4 Nm / SW 9
Electrical characteristics		
Rated current	2 A	4 A
Rated voltage	32 V	32 V
Rated impulse voltage	1.5 kV	1.5 kV
Contact resistance	10 mΩ	10 mΩ
Insulation resistance	10^8 Ω	10^8 Ω
Pollution degree	3	3
Overvoltage category	3	3
Isolation group	1	1
Materials		
Contact material	Copper alloy	Copper alloy
Contact plating	Gold	Gold
Contact carrier material	PA	PA
Housing material	PA, zinc die-cast	PA, zinc die-cast

Technical characteristics M8

Current carrying capacity

The current carrying capacity is limited by maximum temperature of materials for inserts and contacts including terminals. The current capacity-curve is valid for continuous, not interruptet current-loaded contacts of connectors when simultaneous power on all contacts is given, without exceeding the maximum temperature.

Control and test procedures according to DIN IEC 60 512-5.

M8-XS, 3 poles 1 = Wire gauge 0.1 mm²
M8-S, 3 poles 2 = Wire gauge 0.14 mm²

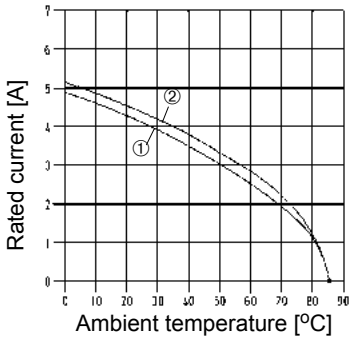

M8-S, 4 poles 1 = Wire gauge 0.25 mm²
2 = Wire gauge 0.34 mm²

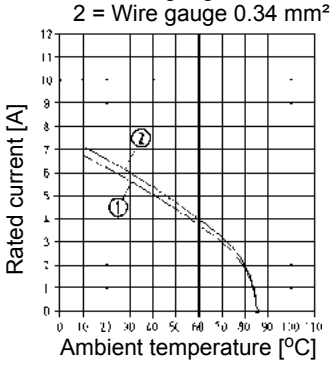

Notes

Mating face

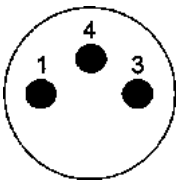

A-coding
Mating face
acc. to IEC 61076-2-101

Applications / Advantages

- Actor and sensor applications
- Unshielded versions
- *HARAX*® rapid termination
- Overmoulded system cables in various lengths
- Robust design, quick assembly

Identification	Part number	Drawing	Dimensions in mm
HARAX® M8-XS Male straight version, 3 poles for 0.1 - 0.14 mm²	21 02 159 1305	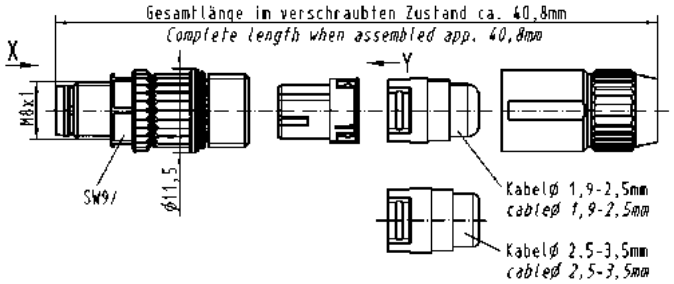	

Mating face

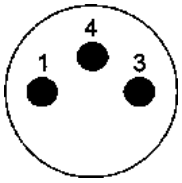

A-coding
Mating face
acc. to IEC 61076-2-101

Identification	Part number	Drawing	Dimensions in mm
HARAX® M8-S			
Male straight version, 3 poles for 0.14 - 0.34 mm²	21 02 151 1305	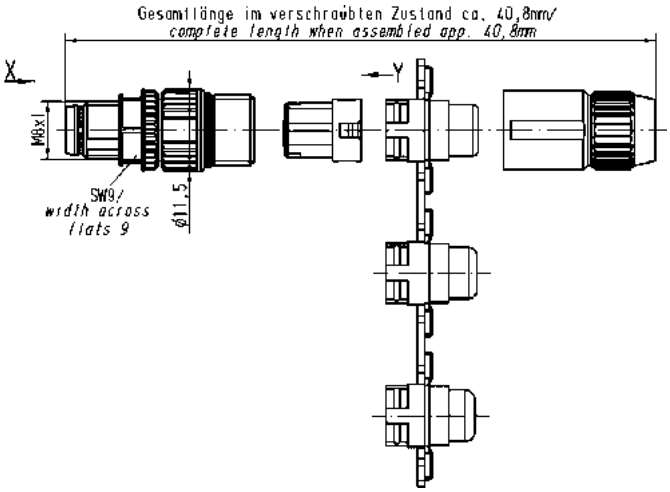 View mating side: 3 poles, male View mating side: 4 poles, male	
Male straight version, 4 poles for 0.14 - 0.34 mm²	21 02 151 1405		

Mating face

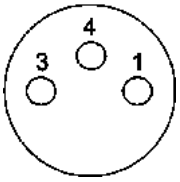

A-coding
Mating face
acc. to IEC 61076-2-101

Identification	Part number	Drawing	Dimensions in mm
HARAX® M8-S			
Female straight version, 3 poles for 0.14 - 0.34 mm²	21 02 151 2305	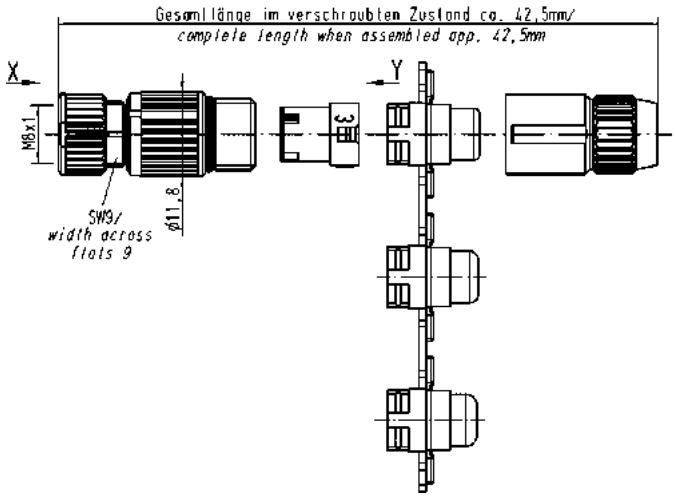	
Female straight version, 4 poles for 0.14 - 0.34 mm²	21 02 151 2405		

M8 System cables 3 and 4 poles

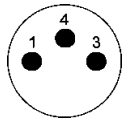

Male, 3 poles

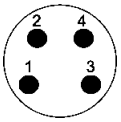

Male, 4 poles

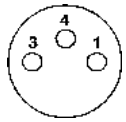

Female, 3 poles

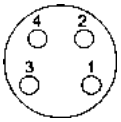

Female, 4 poles

Technical characteristics

System cables with M8 circular connectors without PE

	3 poles		4 poles	
	PVC	PUR	PVC	PUR
Rated voltage	max. 60 V AC/DC	max. 60 V AC/DC	max. 30 V AC/DC	max. 30 V AC/DC
Rated currrent / contact	max. 3 A at +40 °C	max. 3 A at +40 °C	max. 3 A at +40 °C	max. 3 A at +40 °C
Screw locking	M8x1, self securing	M8x1, self securing	M8x1, self securing	M8x1, self securing
Recommended torque	0.4 Nm	0.4 Nm	0.4 Nm	0.4 Nm
Temperature range (working and storage)	-30 °C … +80 °C	-30 °C … +80 °C	-30 °C … +80 °C	-30 °C … +80 °C
Degree of protection	IP67	IP67	IP67	IP67
Number of wires / wire gauge	3 x 0.25 mm²	3 x 0.25 mm²	3 x 0.25 mm²	3 x 0.25 mm²
Conductor insulation	PVC (bn, bu, bk)	PVC (bn, bu, bk)	PVC (bn, wh, bu, bk)	PVC (bn, wh, bu, bk)
Arrangement of insulated strands	32 x Ø 0.1 mm	32 x Ø 0.1 mm	32 x Ø 0.1 mm	32 x Ø 0.1 mm
Sheath	PVC	PUR (UL, CSA)	PVC	PUR (UL, CSA)
Sheath colour	grey	black	grey	black
Outer diameter	Ø 4.40 ± 0.15 mm	Ø 4.40 ± 0.15 mm	Ø 4.70 ± 0.15 mm	Ø 4.40 ± 0.15 mm
Useable as trailing cable	no	yes	no	yes
Halogen free acc. to	–	DIN VDE 0472 part 815	–	DIN VDE 0472 part 815
Flame retardant acc. to	DIN EN 60 332-2-2	cUL20549	DIN EN 60 332-2-2	cUL20549
Oil-resistant	–	–	–	–

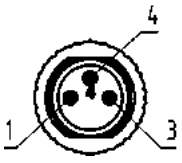

Loading-Plan:

1 — brown
3 — blue
4 — black

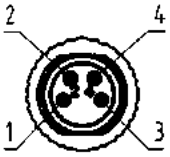

Loading-Plan:

1 — brown
2 — white
3 — blue
4 — black

M8 System cables 3 and 4 poles

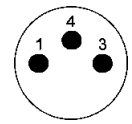

Male, 3 poles

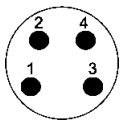

Male, 4 poles

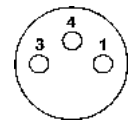

Female, 3 poles

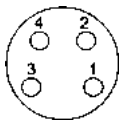

Female, 4 poles

Part number definition

2	1	3	4	X	X	X	X	X	X	X	X	X	X	X

Connector 1
80 Male straight
81 Female straight
82 Male angled
83 Female angled

Connector 2
00 No connector
80 Male straight
81 Female straight
82 Male angled
83 Female angled

Number of contacts
3 3 poles
4 4 poles

Cable material
80 PVC (3 poles)
81 PVC (4 poles)
88 PUR (3 poles)
89 PUR (4 poles)

Preferred length*
005 0.5 m
010 1.0 m
015 1.5 m
020 2.0 m
050 5.0 m
075 7.5 m
100 10.0 m

* Other length on request

Mating face

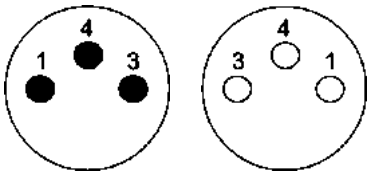

A-coding
Mating face
acc. to IEC 61076-2-101

Identification		Part number	Drawing	Dimensions in mm
M8 Circular connectors Female angled, with LED Male straight				
Length:	0.3 m	21 02 454 7301		
	0.6 m	21 02 454 7302		
	1.0 m	21 02 454 7303		
	1.5 m	21 02 454 7304		
	2.0 m	21 02 454 7305		

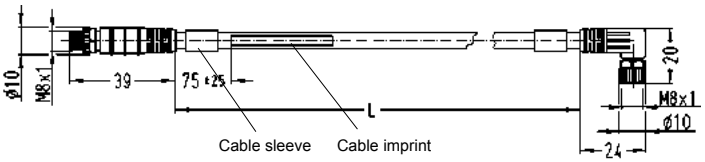

View mating side

Schematic diagram

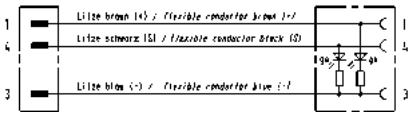

Mating face

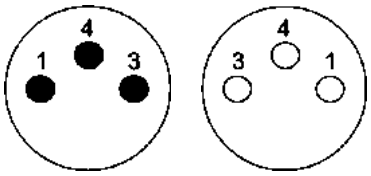

A-coding
Mating face
acc. to IEC 61076-2-101

Identification		Part number	Drawing	Dimensions in mm
M8 Circular connectors Female angled, with LED pre-assembled on one end				
Length:	1.5 m	21 02 554 7301		
	3.0 m	21 02 554 7302		
	5.0 m	21 02 554 7303		
	7.5 m	21 02 554 7304		
	10.0 m	21 02 554 7305		

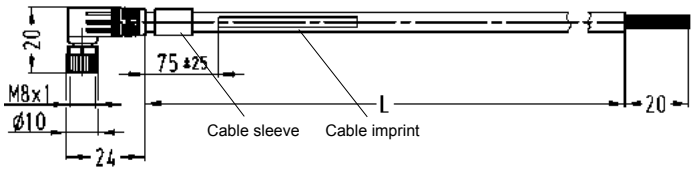

Schematic diagram

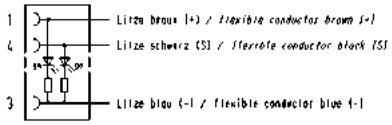

View mating side

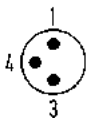

M8 Panel feed-through

Mating face

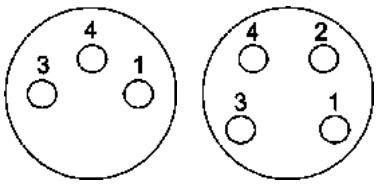

A-coding
Mating face
acc. to IEC 61076-2-101

Identification	Part number	Drawing	Dimensions in mm
M8 Panel feed-through Female A-coding, 50 cm conductors, 0.5 mm², 3 poles Panel thickness min. 1.5 mm	21 02 357 6305	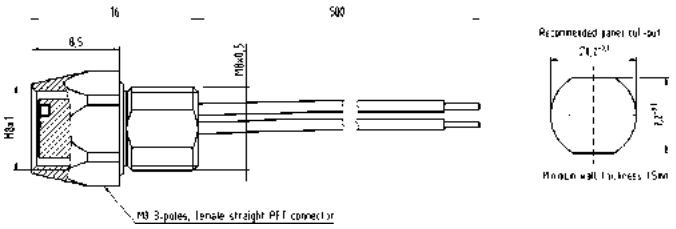	
M8 Panel feed-through Female A-coding, 50 cm conductors, 0.5 mm², 4 poles Panel thickness min. 1.5 mm	21 02 357 6405	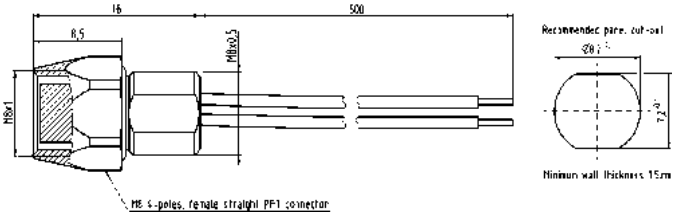	

Identification		Part number	Drawing	Dimensions in mm
Seal M8 for 1.9 - 2.5 mm cable Ø for 2.5 - 3.5 mm cable Ø for 4.2 - 5.4 mm cable Ø		21 01 010 2016 21 01 010 2008 21 01 010 2005	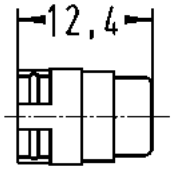	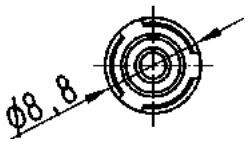
Set of seals for *HARAX*® M8-S for 2.5 - 3.2 mm cable Ø for 3.2 - 4.0 mm cable Ø for 4.0 - 5.1 mm cable Ø 		21 01 010 2013	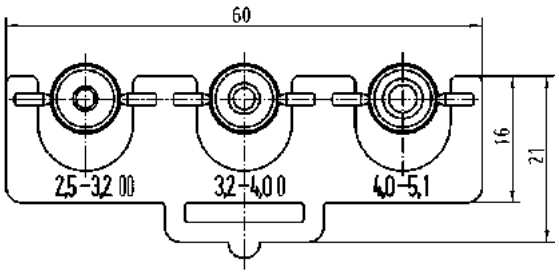	
M8 dynamometric screwdriver Tightening torque 0.4 Nm	SW 9	09 99 000 0380		

M12 A-coding

Specifications IEC 60 352-4

Approval

Mating face

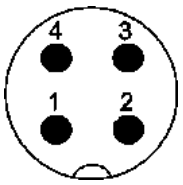

A-coding
Mating face
acc. to IEC 61 076-2-101

Technical characteristics M12 – A-coding

Type M12 A-coded	***HARAX*® M12-S**	***HARAX*® M12 angled**	***HARAX*® M12 L 3 poles, 4 poles**
General data			
Conductor cross section	0.14 - 0.34 mm² AWG 26-22	0.25 - 0.5 mm² AWG 24/7-20	0.34 - 0.75 mm² AWG 22-18
Diameter of individual strands	≥ 0.1 mm	≥ 0.1 mm	≥ 0.1 mm
Conductor insulation material	PVC / PP / TPE	PVC	PVC
Conductor diameter	1.0 - 1.6 mm	1.2 - 1.6 mm	1.6 - 2.0 mm 2.0 - 2.6 mm
Cable diameter	2.9 - 4.0 mm 4.0 - 5.1 mm	4 - 5.1 mm	6 - 8 mm
Temperature range	-40 °C … +85 °C	-40 °C … +85 °C	-40 °C … +85 °C
Temperature during connection	-5° C … +50 °C	-5 °C … +50 °C	-5 °C … +50 °C
Degree of protection	IP67	IP67	IP65 / 67
Mating cycles	100	100	100
Tightening torque connector / hexagonal wrench	0.6 Nm / SW 13	0.6 Nm / SW 13	0.6 Nm / SW 17
Electrical characteristics			
Rated current	4 A	4 A	6 A
Rated voltage	32 V	32 V	50 V
Rated impulse voltage	1.5 kV	1.5 kV	1.5 kV
Contact resistance	10 mΩ	10 mΩ	10 mΩ
Insulation resistance	10^8 Ω	10^8 Ω	10^8 Ω
Pollution degree	3	3	3
Overvoltage category	3	3	3
Isolation group	1	1	1
Materials			
Contact material	Brass	Brass	Brass
Contact plating	Gold	Gold	Gold
Contact carrier material	PA reinforced	PA	PA unreinforced
Housing material	PA reinforced	PA	PA unreinforced

Specifications IEC 60 352-4

Approval

Mating face

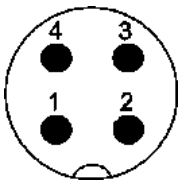

A-coding
Mating face
acc. to IEC 61 076-2-101

Technical characteristics M12 – A-coding

Type M12 A-coded	***HARAX*® M12-L 5 poles**	***HARAX*® M12 L shielded**	**M12 Crimp**
General data			
Conductor cross section	0.34 - 0.5 mm² AWG 22-20	0.14 - 0.34 mm² AWG 26-22	0.14 - 0.75 mm² AWG 26-18
Diameter of individual strands	≥ 0.1 mm	≥ 0.1 mm	X
Conductor insulation material	PVC	PVC	X
Conductor diameter	1.2 - 2.0 mm	1.2 - 1.6 mm	2.0 - 2.3 mm
Cable diameter	6 - 8 mm	4.5 - 8.8 mm	4.5 - 8.8 mm
Temperature range	-40 °C … +85 °C	-40 °C … +85 °C	-40 °C … +85 °C
Temperature during connection	-5 °C … +50 °C	-5 °C … +50 °C	-5 °C … +50 °C
Degree of protection	IP65 / 67	IP65 / 67	IP67
Mating cycles	100	100	500
Tightening torque connector / hexagonal wrench	0.6 Nm / SW 17	0.6 Nm / SW 17	0.5 Nm / SW 17
Electrical characteristics			
Rated current	4 A	4 A	4 A
Rated voltage	50 V	50 V	250 V
Rated impulse voltage	1.5 kV	1.5 kV	1.5 kV
Contact resistance	10 mΩ	10 mΩ	10 mΩ
Insulation resistance	10^8 Ω	10^8 Ω	10^8 Ω
Pollution degree	3	3	3
Overvoltage category	3	3	3
Isolation group	1	1	1
Materials			
Contact material	Brass	Brass	Brass
Contact plating	Gold	Gold	Gold
Contact carrier material	PA unreinforced	PA unreinforced	PA
Housing material	PA unreinforced	PA unreinforced	PA

Technical characteristics M12 – A-coding

Current carrying capacity

The current carrying capacity is limited by maximum temperature of materials for inserts and contacts including terminals. The current capacity-curve is valid for continuous, not interruptet current-loaded contacts of connectors when simultaneous power on all contacts is given, without exceeding the maximum temperature.

Control and test procedures according to DIN IEC 60512-5.

M12-S, 4 poles

1 = Wire gauge 0.25 mm²
2 = Wire gauge 0.34 mm²

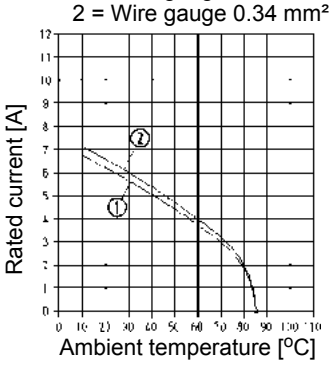

M12-L
3 poles, 4 poles

1 = Wire gauge 0.34 mm²
2 = Wire gauge 0.75 mm²

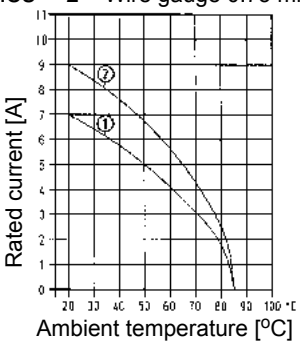

M12, 4 poles, angled

1 = Wire gauge 0.25 mm²
2 = Wire gauge 0.5 mm²

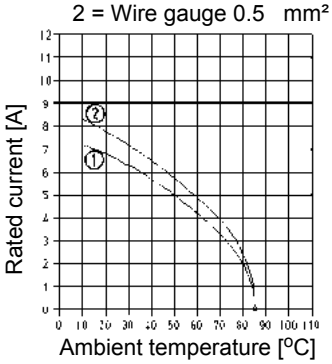

M12L, 5 poles

1 = Wire gauge 0.25 mm²
2 = Wire gauge 0.34 mm²

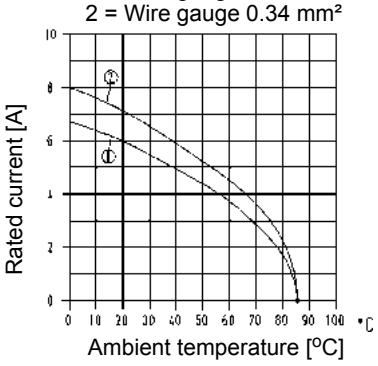

M12, Crimp

1 = Wire gauge 0.34 mm² / 0.5 mm²

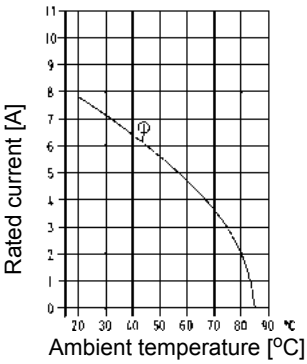

Technical characteristics M12 – A-coding, PCB adapter

M12, A-coding, straight, male, 4 poles

Wire gauge 0.5 mm²

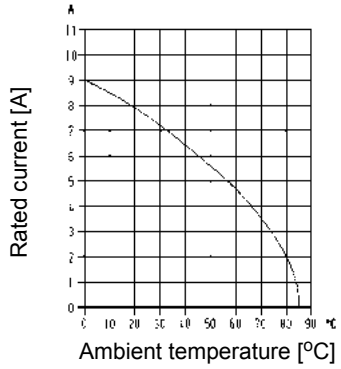

M12, A-coding, straight, female, 4 poles

Wire gauge 0.75 mm²

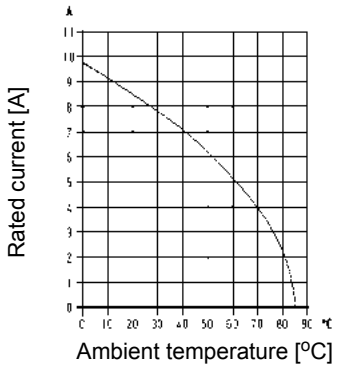

M12, A-coding, straight, female, 5 poles

Wire gauge 0.5 mm²

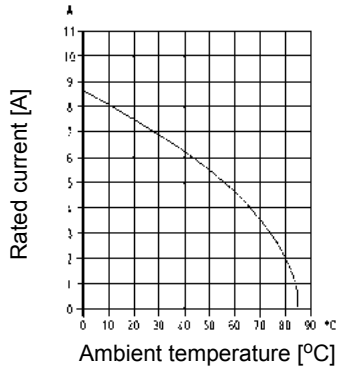

M12, A-coding, straight, male, 5 poles

Wire gauge 0.5 mm²

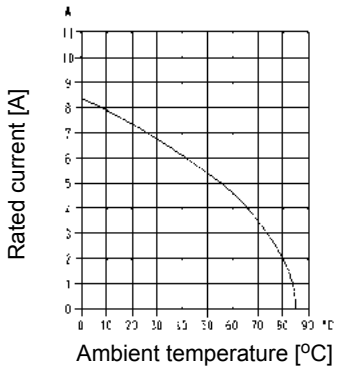

Mating face

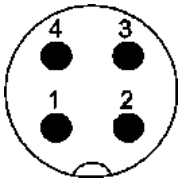

A-coding
Mating face
acc. to IEC 61076-2-101

Applications / Advantages

- Actor and sensor applications
- Shielded and unshielded versions
- Available with crimp resp. *HARAX*® rapid termination, or as overmoulded system cable in various lengths
- Robust design, quick assembly

Identification	Part number	Drawing	Dimensions in mm
HARAX® M12-S			
 Male straight version 4 poles, 0.14 - 0.34 mm²	21 03 111 1405	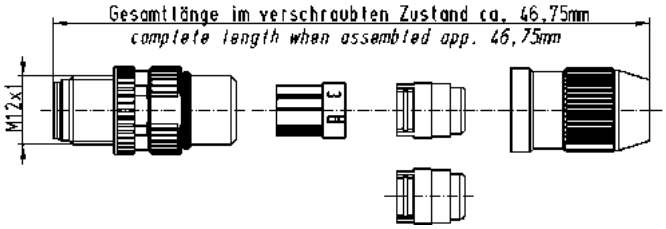	
Male straight version 4 poles, 0.25 - 0.5 mm²	21 03 112 1405	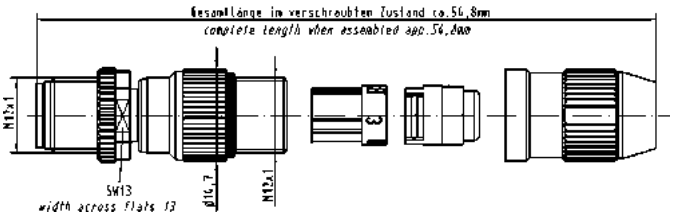	

Mating face

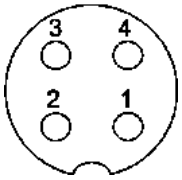

A-coding
Mating face
acc. to IEC 61076-2-101

Identification	Part number	Drawing	Dimensions in mm
HARAX® M12-S Female straight version 4 poles, 0.14 - 0.34 mm²	21 03 111 2405	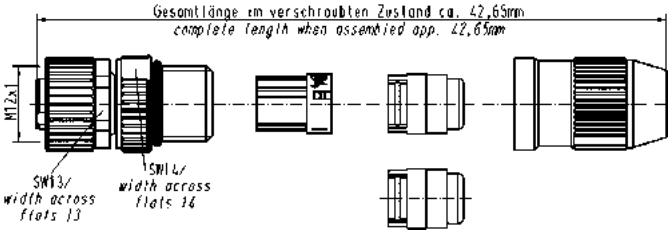	
Female straight version 4 poles, 0.25 - 0.5 mm²	21 03 112 2405	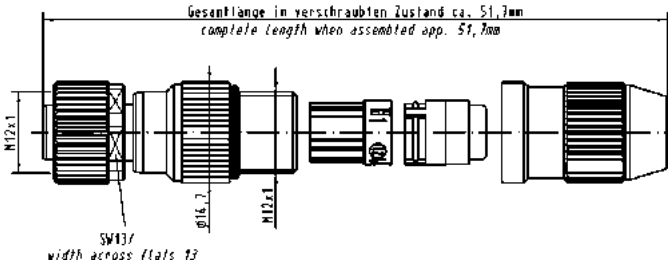	

Mating face

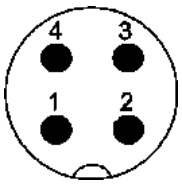

A-coding
Mating face
acc. to IEC 61076-2-101

RoHS

Identification	Part number	Drawing	Dimensions in mm
HARAX® M12 Male angled version 4 poles	21 01 140 5081	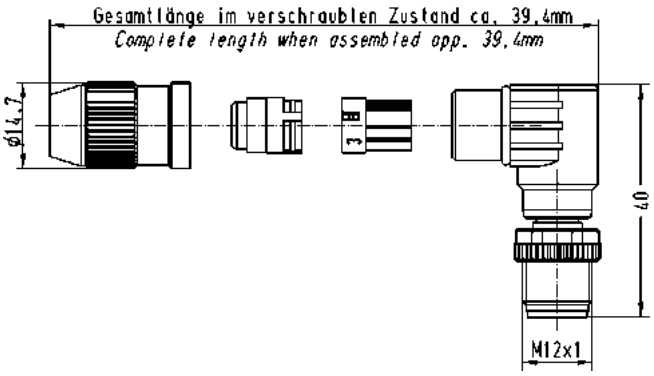	

Mating face

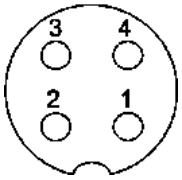

A-coding
Mating face
acc. to IEC 61076-2-101

Identification	Part number	Drawing	Dimensions in mm
HARAX® M12 Female angled version 4 poles	21 01 140 5091	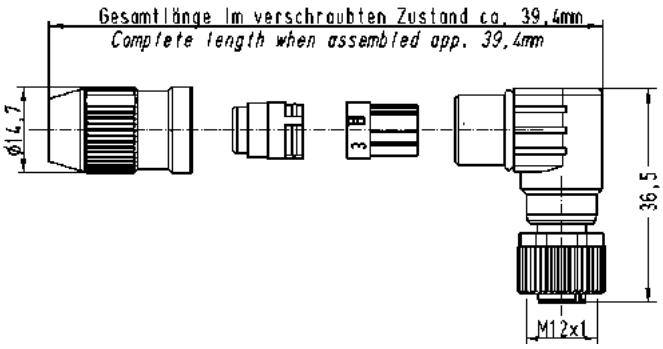	

Mating face

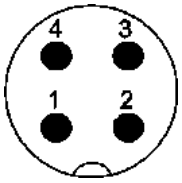

A-coding
Mating face
acc. to IEC 61076-2-101

Identification	Part number	Drawing	Dimensions in mm
HARAX® M12-L, unshielded Male 3 poles, A-coding, with pre-leading contact (assignment 3, 4, 5) 3 poles, A-coding (assignment 1, 3, 4) 4 poles, A-coding (assignment 1, 2, 3, 4) 4 poles, A-coding, to 2.6 mm core diameter (assignment 1, 2, 3, 4) 0.34 - 0.75 mm² AWG 22 - 18 Cable diameter: 6 - 8 mm	21 03 212 1400 21 03 212 1306 21 03 212 1305 21 03 212 1407	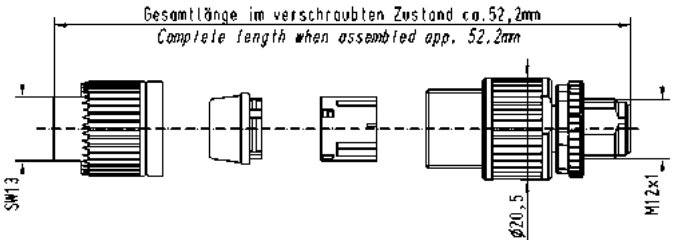	
HARAX® M12-L, unshielded Male 5 poles, A-coding 0.34 - 0.5 mm² AWG 22 - 20 Cable diameter: 6 - 8 mm	21 03 272 1505	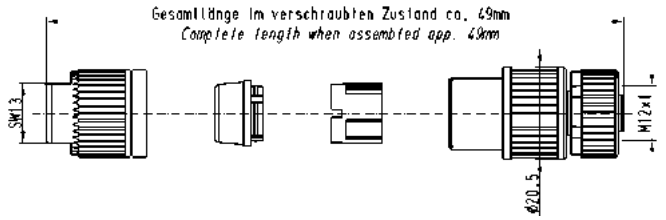	

Mating face

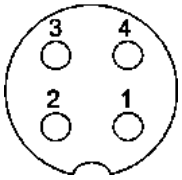

A-coding
Mating face
acc. to IEC 61076-2-101

Identification	Part number	Drawing	Dimensions in mm
HARAX® M12-L, unshielded Female 3 poles, A-coding (assignment 3, 4, 5)	21 03 212 2400	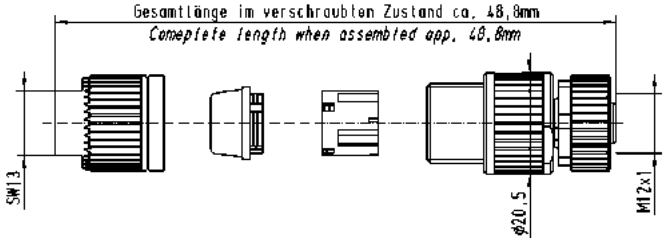	
3 poles, A-coding (assignment 1, 3, 4)	21 03 212 2306		
4 poles, A-coding (assignment 1, 2, 3, 4)	21 03 212 2305		
4 poles, A-coding, to 2.6 mm core diameter (assignment 1, 2, 3, 4)	21 03 212 2407		
0.34 - 0.75 mm² AWG 22 - 18 Cable diameter: 6 - 8 mm			
HARAX® M12-L, unshielded Female 5 poles, A-coding	21 03 272 2505	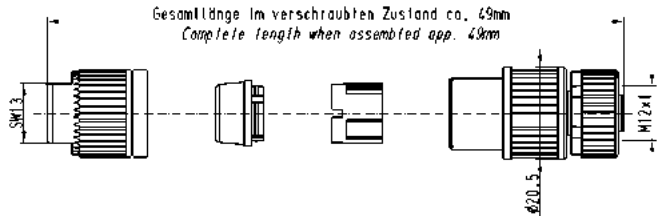	
0.34 - 0.5 mm² AWG 22 - 20 Cable diameter: 6 - 8 mm			

M12 *HARAX*® A-coded

Mating face

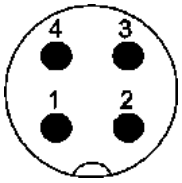

A-coding
Mating face
acc. to IEC 61076-2-101

Identification	Part number	Drawing	Dimensions in mm
HARAX® M12-L, shielded Male 4 poles, A-coding 0.14 - 0.34 mm² / AWG 26 - 22	21 03 221 1405	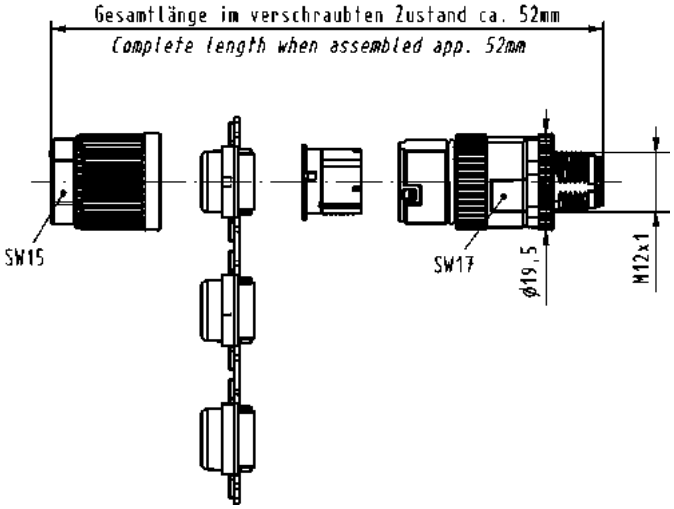	
M12 Circular connector Male with IDC termination technology, 8 poles 0.14 - 0.34 mm² / AWG 26 - 22	21 03 121 1801	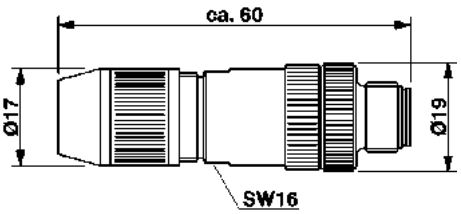	

Mating face

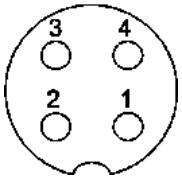

A-coding
Mating face
acc. to IEC 61076-2-101

Identification	Part number	Drawing	Dimensions in mm
HARAX® M12-L, shielded Female 4 poles, A-coding 0.14 - 0.34 mm² / AWG 26 - 22	21 03 221 2405	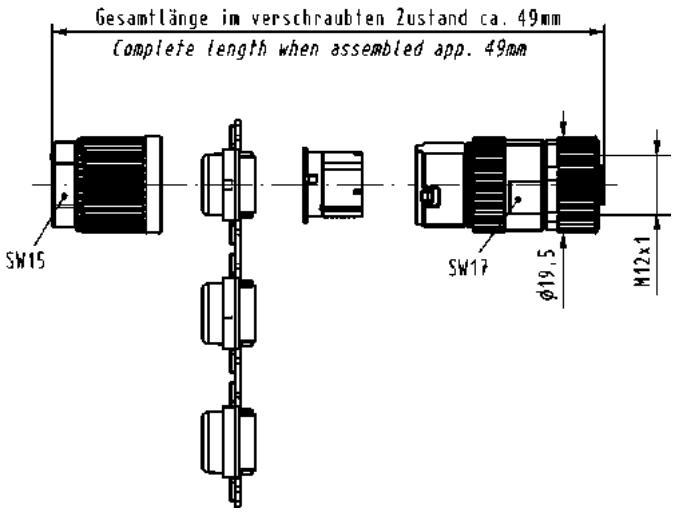	
M12 Circular connectors Female with IDC termination technology, 8 poles 0.14 - 0.34 mm² / AWG 26 - 22	21 03 121 2801	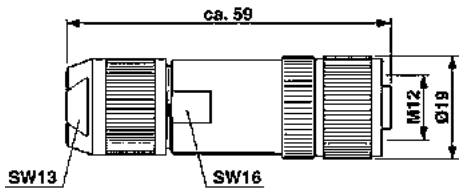	

Further information and data sheets see www.HARTING.com

M12 Crimp A-coded

Mating face

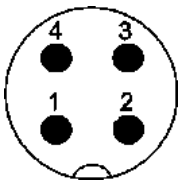

A-coding
Mating face
acc. to IEC 61076-2-101

RoHS

Identification	Part number	Drawing	Dimensions in mm
M12 Crimp Male 4 poles, A-coding	21 03 812 1405	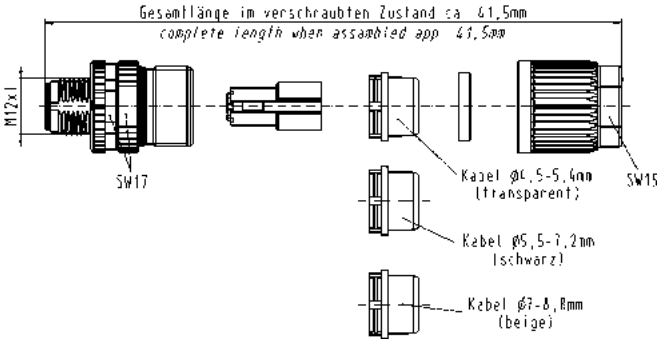	
M12 Crimp Male 5 poles, A-coding	21 03 812 1505*	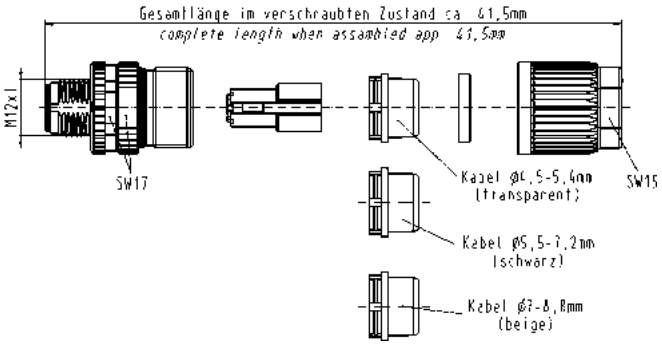	
M12 Crimp Slim design Male 5 poles, A-coding Cable diameter: 5.7 - 8.8 mm	21 03 821 1505*	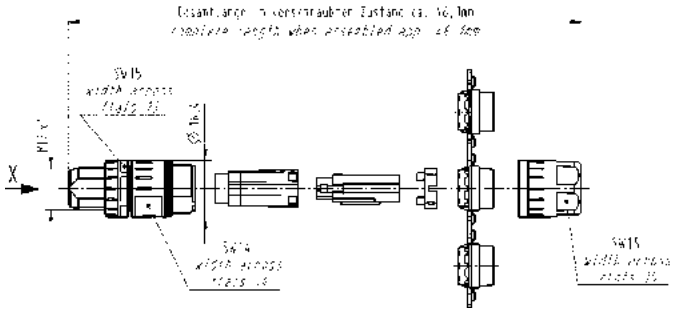	
Male 8 poles, A-coding Cable diameter: 5.7 - 8.8 mm	21 03 821 1805*		

Further information and data sheets see www.HARTING.com
* UL approval is in preparation

M12 Crimp A-coded

Mating face

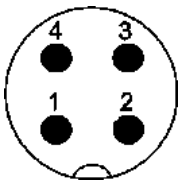

A-coding
Mating face
acc. to IEC 61 076-2-101

Identification	Part number	Drawing	Dimensions in mm
M12 Crimp, angled Male 5 poles, A-coding	21 03 822 3505*	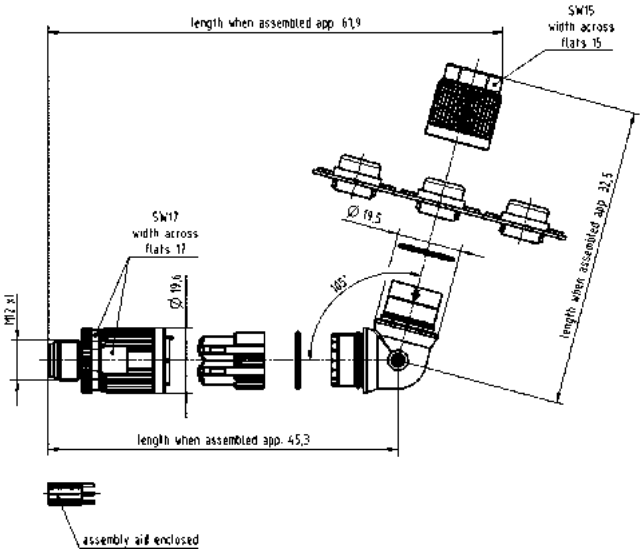	

Further information and data sheets see www.HARTING.com
* UL approval is in preparation

M12 Crimp A-coded

Mating face

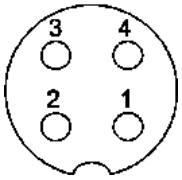

A-coding
Mating face
acc. to IEC 61076-2-101

Identification	Part number	Drawing	Dimensions in mm
M12 Crimp Female 4 poles, A-coding	21 03 812 2405	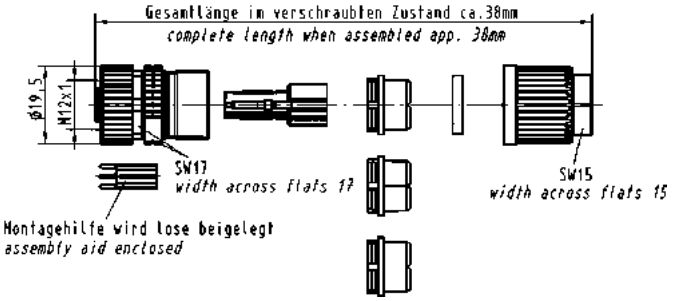	
M12 Crimp Female 5 poles, A-coding	21 03 812 2505*	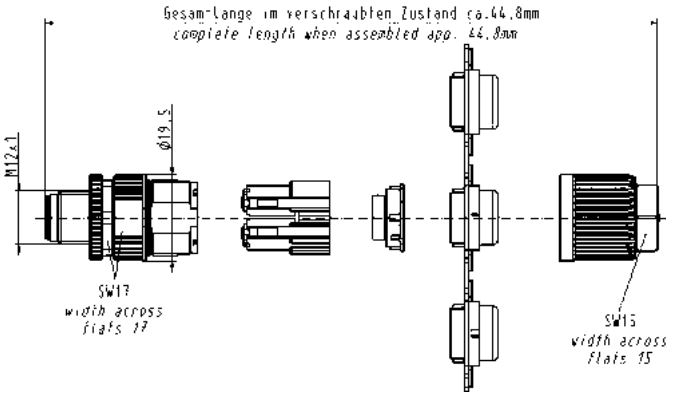	

Further information and data sheets see www.HARTING.com
* UL approval is in preparation

Mating face

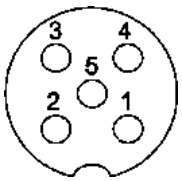

A-coding
Mating face
acc. to IEC 61076-2-101

Identification	Part number	Drawing	Dimensions in mm
M12 Crimp, angled Female 5 poles, A-coding	21 03 822 4505*	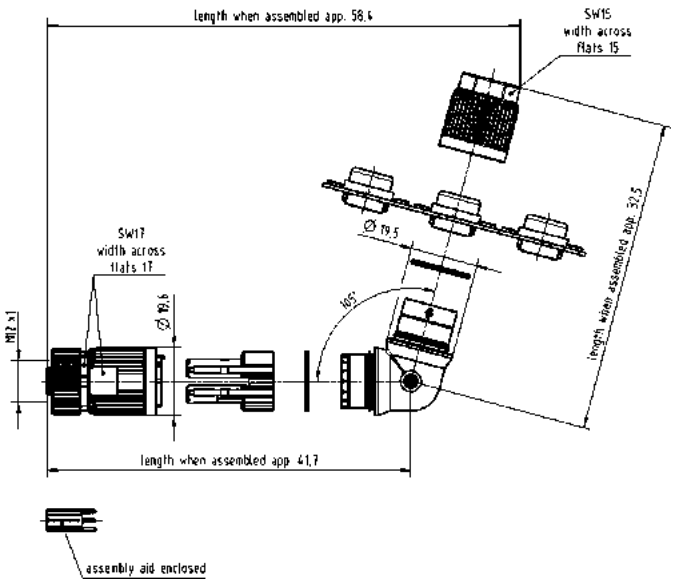	

Further information and data sheets see www.HARTING.com
* UL approval is in preparation

M12 System cables, A-coding, 3 and 4 poles

Male, 3 poles

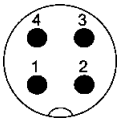

Male, 4 poles

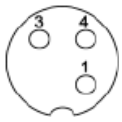

Female, 3 poles

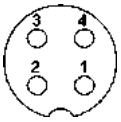

Female, 4 poles

Technical characteristics

System cables with M12 circular connectors without PE, A-coding

	3 poles		4 poles	
	PVC	PUR	PVC	PUR
Rated voltage	max. 250 V AC/DC	max. 250 V AC/DC	max. 250 V AC/DC	max. 250 V AC/DC
Rated currrent / contact	max. 4 A at +40 °C	max. 4 A at +40 °C	max. 4 A at +40 °C	max. 4 A at +40 °C
Screw locking	M12x1, self securing	M12x1, self securing	M12x1, self securing	M12x1, self securing
Recommended torque	0.6 Nm	0.6 Nm	0.6 Nm	0.6 Nm
Temperature range (working and storage)	-30 °C … +80 °C	-30 °C … +80 °C	-30 °C … +80 °C	-30 °C … +80 °C
Degree of protection	IP67	IP67	IP67	IP67
Number of wires / wire gauge	3 x 0.34 mm²	3 x 0.34 mm²	4 x 0.34 mm²	4 x 0.34 mm²
Conductor insulation	PVC (bn, bu, bk)	PP (bn, bu, bk)	PVC (bn, wh, bu, bk)	PP (bn, wh, bu, bk)
Arrangement of insulated strands	42 x Ø 0.1 mm	42 x Ø 0.1 mm	42 x Ø 0.1 mm	42 x Ø 0.1 mm
Sheath	PVC	PUR (UL, CSA)	PVC	PUR (UL, CSA)
Sheath colour	grey	black	grey	black
Outer diameter	Ø 4.4 ± 0.15 mm	Ø 4.4 ± 0.15 mm	Ø 4.7 ± 0.15 mm	Ø 4.7 ± 0.15 mm
Useable as trailing cable	no	yes	no	yes
Halogen free acc. to	–	DIN VDE 0472 part 815	–	DIN VDE 0472 part 815
Flame retardant acc. to	DIN EN 60332-2-2	cUL20549	DIN EN 60332-2-2	cUL20549
Oil-resistant	–	–	–	DIN EN 60811-2-1

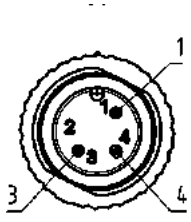

Loading-Plan:

1 brown
3 blue
4 black

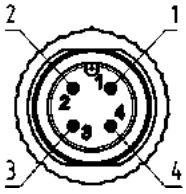

Loading-Plan:

1 brown
2 white
3 blue
4 black

M12 System cables, A-coding, 3 and 4 poles

Male, 3 poles

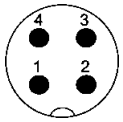

Male, 4 poles

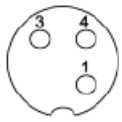

Female, 3 poles

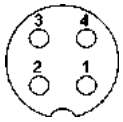

Female, 4 poles

Part number definition

2	1	3	4	X	X	X	X	X	X	X	X	X	X	X

Connector 1
84 Male straight
85 Female straight
86 Male angled
87 Female angled

Connector 2
00 No connector
84 Male straight
85 Female straight
86 Male angled
87 Female angled

Number of contacts
3 3 poles
4 4 poles

Cable material
83 PVC (3 poles)
84 PVC (4 poles)
90 PUR (3 poles)
91 PUR (4 poles)

Preferred length*
005 0.5 m
010 1.0 m
015 1.5 m
020 2.0 m
050 5.0 m
075 7.5 m
100 10.0 m

* Other length on request

M12 System cables, A-coding, 5 and 8 poles

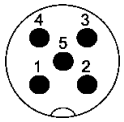

Male, 5 poles

Male, 8 poles

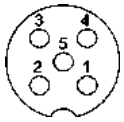

Female, 5 poles

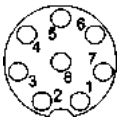

Female, 8 poles

Technical characteristics

System cables with M12 circular connectors without PE, A-coding

	5 poles	8 poles
	PVC	PVC
Rated voltage	max. 60 V AC/DC	max. 30 V AC/DC
Rated currrent / contact	max. 4 A at +40 °C	max. 2 A at +40 °C
Screw locking	M12x1, self securing	M12x1, self securing
Recommended torque	0.6 Nm	0.6 Nm
Temperature range (working and storage)	-30 °C … +80 °C	-30 °C … +80 °C
Degree of protection	IP67	IP67
Number of wires / wire gauge	5 x 0.34 mm²	8 x 0.25 mm²
Conductor insulation	PVC (bn, wh, bu, bk, gn/ye)	PVC (wh, bn, gn, ye, gy, pk, bu, rd)
Arrangement of insulated strands	42 x Ø 0.1 mm	32 x Ø 0.1 mm
Sheath	PVC	PVC
Sheath colour	grey	grey
Outer diameter	Ø 5.2 ± 0.15 mm	Ø 6.2 ± 0.2 mm
Useable as trailing cable	no	no
Halogen free acc. to	–	–
Flame retardant acc. to	DIN EN 60332-2-2	DIN EN 60332-2-2
Oil-resistant	–	–

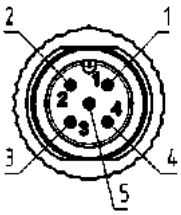

Loading-Plan:

1 brown
2 white
3 blue
4 black
5 green-yellow

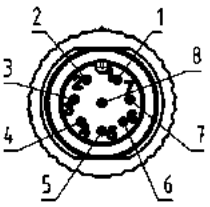

Loading-Plan:

1 white
2 brown
3 green
4 yellow
5 grey
6 pink
7 blue
8 red

M12 System cables, A-coding, 5 and 8 poles

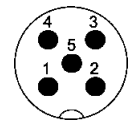
Male, 5 poles

Male, 8 poles

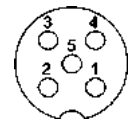
Female, 5 poles

Female, 8 poles

Part number definition

2	1	3	4	X	X	X	X	X	X	X	X	X	X	X

Connector 1
84 Male straight
85 Female straight
86 Male angled
87 Female angled

Connector 2
00 No connector
84 Male straight
85 Female straight
86 Male angled
87 Female angled

Number of contacts
5 5 poles
8 8 poles

Cable material
82 PVC (8 poles)
85 PVC (5 poles)

Preferred length*
005 0.5 m
010 1.0 m
015 1.5 m
020 2.0 m
050 5.0 m
075 7.5 m
100 10.0 m

* Other length on request

M12 System cables, A-coding, 12 poles

Male, 12 poles

Female, 12 poles

Technical characteristics

System cables with M12 circular connectors without PE, A-coding

	12 poles	
	PVC	PUR
Rated voltage	max. 30 V AC/DC	max. 30 V AC/DC
Rated currrent / contact	max. 1.5 A at +40 °C	max. 1.5 A at +40 °C
Screw locking	M12x1, self securing	M12x1, self securing
Recommended torque	0.6 Nm	0.6 Nm
Temperature range (working and storage)	-30 °C … +80 °C	-30 °C … +80 °C
Degree of protection	IP67	IP67
Number of wires / wire gauge	12 x 0.14 mm²	12 x 0.14 mm²
Conductor insulation	PVC (core: vt, rd/bu, gy/pk outer: bn, rd, gy, bk, ye, pk, gn, wh, bu)	PP (core: vt, rd/bu, gy/pk outer: bn, rd, gy, bk, ye, pk, gn, wh, bu)
Arrangement of insulated strands	18 x Ø 0.1 mm	18 x Ø 0.1 mm
Sheath	PVC	PUR (UL, CSA)
Sheath colour	grey	black
Outer diameter	Ø 6.2 ± 0.2 mm	Ø 6.1 ± 0.2 mm
Useable as trailing cable	no	yes
Halogen free acc. to	–	DIN VDE 0472 part 815
Flame retardant acc. to	DIN EN 60332-1-2	cUL20549
Oil-resistant	DIN EN 60811-2-1	–

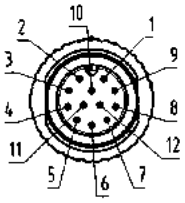

Loading-Plan:

1	brown
2	blue
3	white
4	green
5	pink
6	yellow
7	black
8	grey
9	red
10	violet
11	grey-pink
12	red-blue

M12 System cables, A-coding, 12 poles

Male, 12 poles

Female, 12 poles

Part number definition

2	1	3	4	X	X	X	X	X	X	X	X	X	X	X

Connector 1
84 Male straight
85 Female straight
86 Male angled
87 Female angled

Connector 2
00 No connector
84 Male straight
85 Female straight
86 Male angled
87 Female angled

Number of contacts
C 12 poles

Cable material
78 PUR
79 PVC

Preferred length*
005 0.5 m
010 1.0 m
015 1.5 m
020 2.0 m
050 5.0 m
075 7.5 m
100 10.0 m

* Other length on request

M12 System cables, A-coded

Mating face

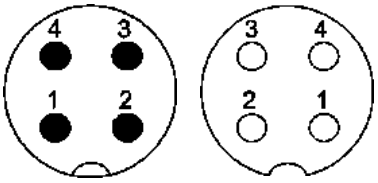

A-coding
Mating face
acc. to IEC 61076-2-101

Identification		Part number
M12 Circular connectors		
Female angled, with LED, Male straight		
Length:	0.3 m	21 03 415 7401
	0.6 m	21 03 415 7402
	1.0 m	21 03 415 7403
	1.5 m	21 03 415 7404
	2.0 m	21 03 415 7405

Drawing

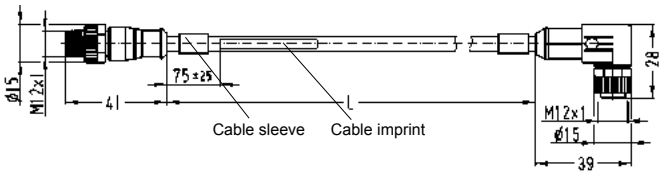

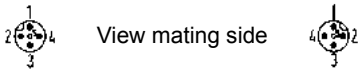

Schematic diagram

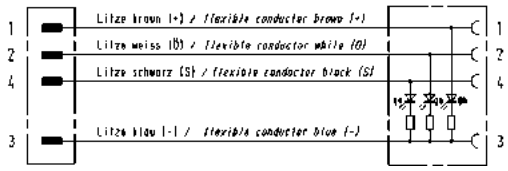

Dimensions in mm

Mating face

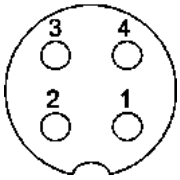

A-coding
Mating face
acc. to IEC 61076-2-101

Identification		Part number	Drawing	Dimensions in mm
M12 Circular connectors Female angled, with LED pre-assembled on one end				
Length:	1.5 m	21 03 515 7401		
	3.0 m	21 03 515 7402		
	5.0 m	21 03 515 7403		
	7.5 m	21 03 515 7404		
	10.0 m	21 03 515 7405		

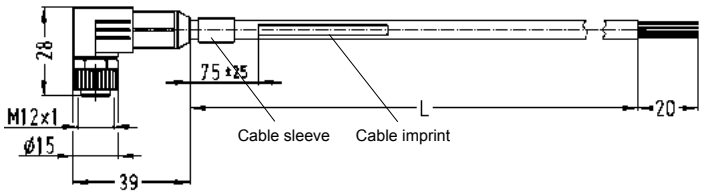

View mating side

Schematic diagram

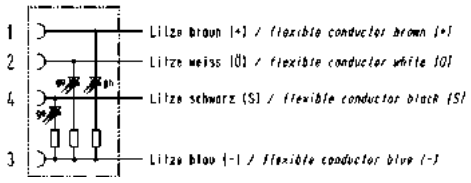

M12 Panel feed-through *HARAX*® A-coded

Mating face

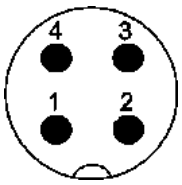

A-coding
Mating face
acc. to IEC 61076-2-101

Applications / Advantages

- Actor and sensor applications
- For panel feed-through or PCB, straight version in IP20 or IP67, with or without assembled pigtail
- Available with crimp resp. *HARAX*® rapid termination
- Quick and easy assembly

Identification	Part number	Drawing	Dimensions in mm
HARAX® Panel feed-through Male 4 poles, A-coding 0.14 - 0.34 mm² / AWG 26 - 22 Panel thickness min. 2.5 mm max. 4.5 mm	21 03 321 1425	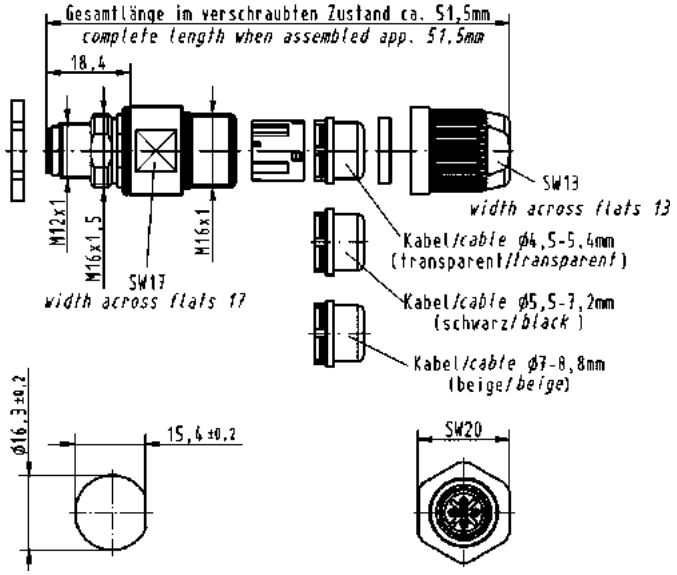	

M12 Panel feed-through *HARAX*® A-coded

Mating face

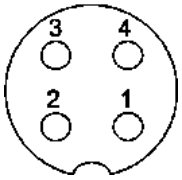

A-coding
Mating face
acc. to IEC 61076-2-101

Circular Connectors

Identification	Part number	Drawing	Dimensions in mm
HARAX® Panel feed-through Female 4 poles, A-coding 0.14 - 0.34 mm² / AWG 26 - 22 Panel thickness min. 2.5 mm max. 4.5 mm	21 03 321 2425	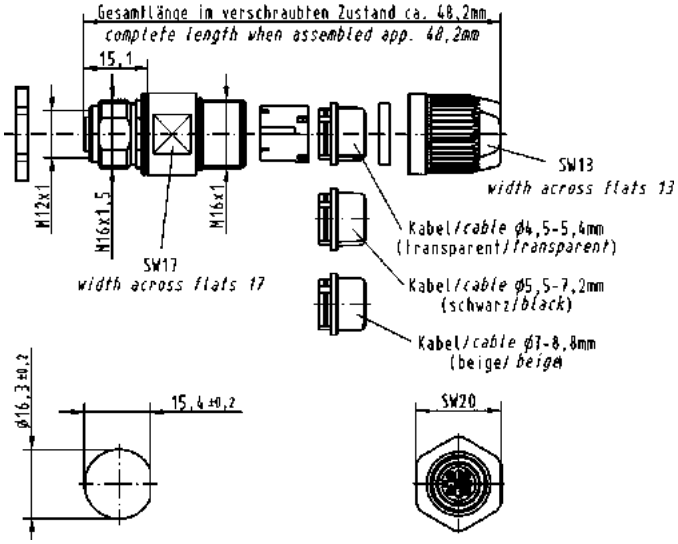	

Further information and data sheets see www.HARTING.com

M12 Panel feed-through Crimp A-coded

Mating face

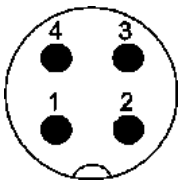

A-coding
Mating face
acc. to IEC 61076-2-101

Identification	Part number	Drawing	Dimensions in mm
M12 Panel feed-through Crimp Male 4 poles, A-coding Panel thickness min. 2.5 mm max. 4.5 mm	21 03 822 1425	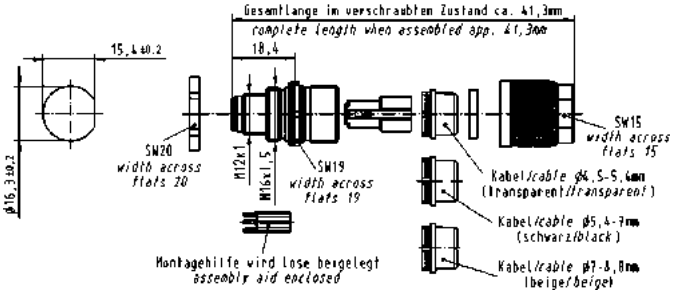	
M12 Panel feed-through Crimp Male 5 poles, A-coding Panel thickness min. 2.5 mm max. 4.5 mm	21 03 822 1525*	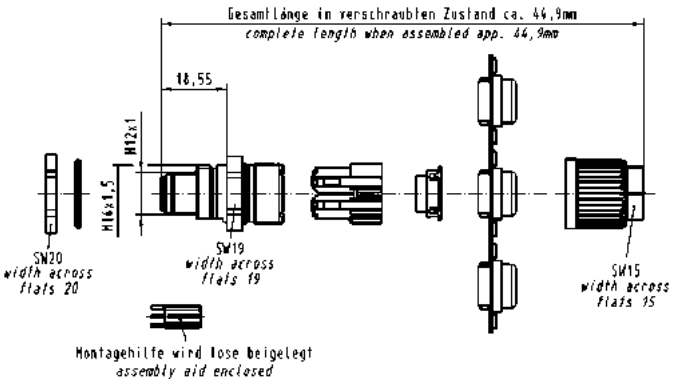	

Further information and data sheets see www.HARTING.com
* UL approval is in preparation

M12 Panel feed-through Crimp A-coded

Mating face

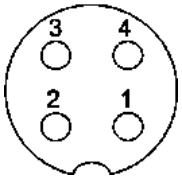

A-coding
Mating face
acc. to IEC 61 076-2-101

Identification	Part number	Drawing	Dimensions in mm
M12 Panel feed-through Crimp Female 4 poles, A-coding Panel thickness min. 2.5 mm max. 4.5 mm	21 03 822 2425	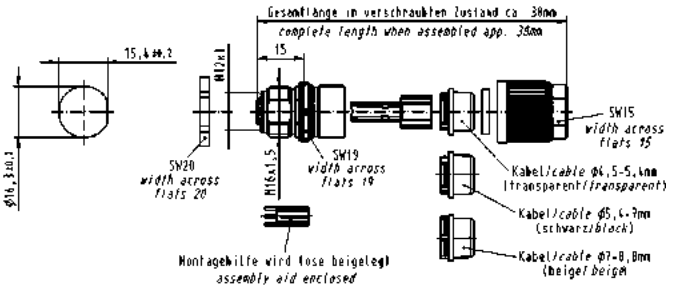	
M12 Panel feed-through Crimp Female 5 poles, A-coding Panel thickness min. 2.5 mm max. 4.5 mm	21 03 822 2525*	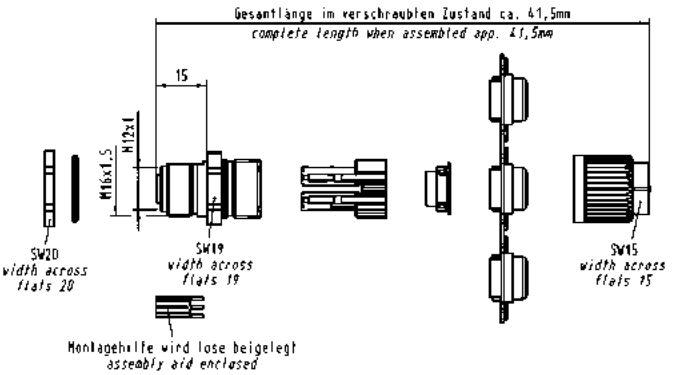	

Further information and data sheets see www.HARTING.com
* UL approval is in preparation

M12 Panel feed-through A-coded

Mating face

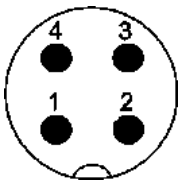

A-coding
Mating face
acc. to IEC 61076-2-101

Identification	Part number	Drawing	Dimensions in mm
M12 Panel feed-through Male A-coding, 50 cm conductors, 0.5 mm², 4 poles Panel thickness min. 2.0 mm max. 5.0 mm	21 03 311 1402	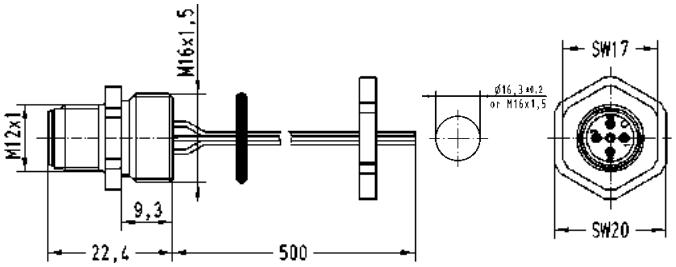	
Panel thickness min. 1.0 mm max. 4.0 mm	21 03 371 1405		
M12 Panel feed-through Male A-coding, 50 cm conductors, 0.5 mm², 5 poles Panel thickness min. 2.0 mm max. 5.0 mm	21 03 311 1501	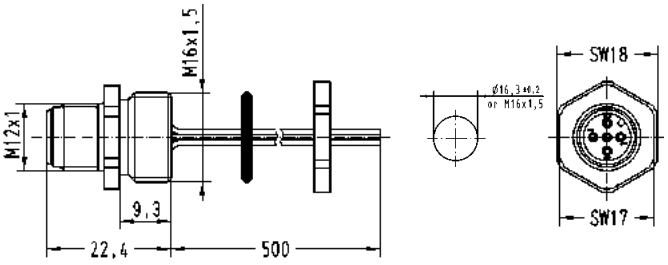	

M12 Panel feed-through A-coded

Mating face

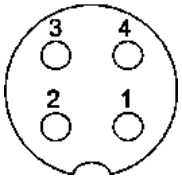

A-coding
Mating face
acc. to IEC 61 076-2-101

Identification	Part number	Drawing	Dimensions in mm
M12 Panel feed-through Female A-coding, 50 cm conductors, 0.5 mm², 4 poles Panel thickness min. 2.0 mm max. 5.0 mm	21 03 311 2400	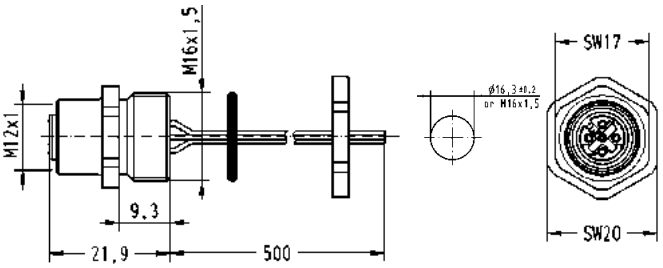	
M12 Panel feed-through Female A-coding, 50 cm conductors, 0.5 mm², 5 poles Panel thickness min. 2.0 mm max. 5.0 mm	21 03 311 2501	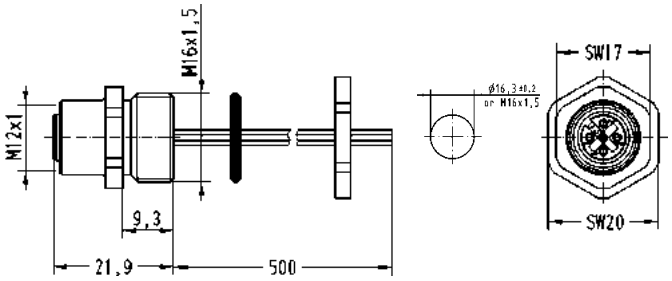	

Further information and data sheets see www.HARTING.com

M12 PCB adapter A-coded

Mating face

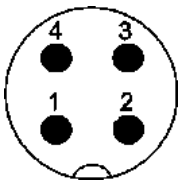

A-coding
Mating face
acc. to IEC 61076-2-101

Technical characteristics: M12 PCB adapter

Degree of protection	IP20, IP67 (mated and locked)	Temperature during connection	-5 °C … +50 °C
Rated current	max. 4 A (dependant on PCB layout)	Termination	PIH
Rated voltage	4 poles: 250 V 5 poles: 50 V	Contact material	Copper alloy
Mating cycles	max. 100	Contact plating (mating side)	Au over Ni
Limiting temperature	-40 °C … +85 °C	Insulator material	PA

Identification		Part number	Drawing	Dimensions in mm
M12 PCB adapter Male, A-coding, straight	4 poles, IP20 4 poles, IP67	21 03 321 1410 21 03 321 1420	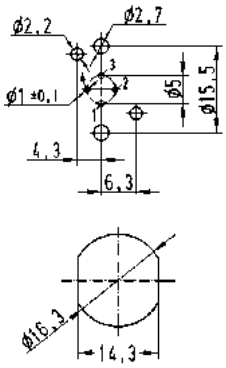	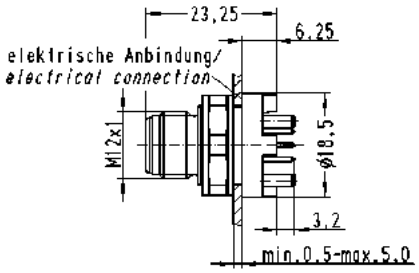
M12 PCB adapter Male, A-coding, straight	5 poles, IP20 5 poles, IP67	21 03 321 1510 21 03 321 1520	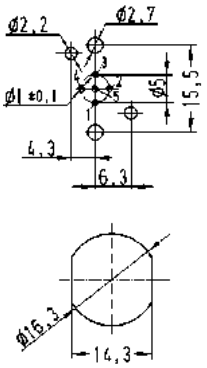	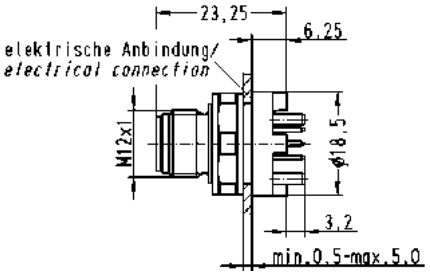

M12 PCB adapter A-coded

Mating face

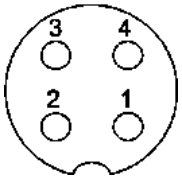

A-coding
Mating face
acc. to IEC 61076-2-101

Identification	Part number	Drawing	Dimensions in mm
M12 PCB adapter Female, A-coding, straight 4 poles, IP20 4 poles, IP67	21 03 321 6410 21 03 321 6420*	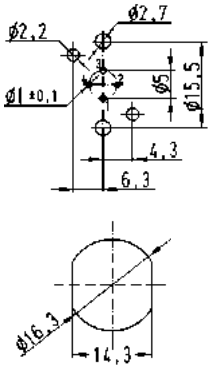 	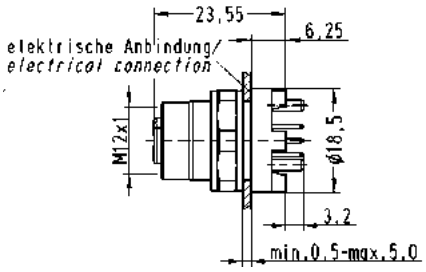
M12 PCB adapter Female, A-coding, straight 5 poles, IP20 5 poles, IP67	21 03 321 6510 21 03 321 6520	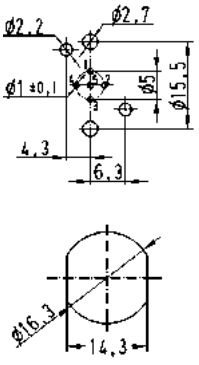 	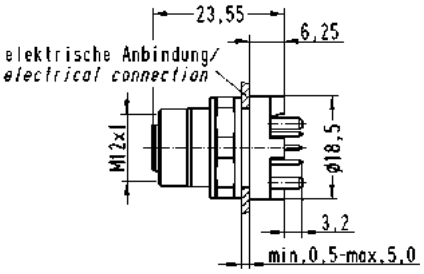

Further information and data sheets see www.HARTING.com
* UL approval is in preparation

M12 PCB adapter shielded A-coded

Mating face

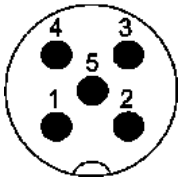

A-coding
Mating face
acc. to IEC 61076-2-101

RoHS

Identification	Part number	Drawing	Dimensions in mm
M12 PCB adapter, shielded			
Packaging: 60 pieces in a tray **Order housing separately**			
Male			
4 poles, A-coding	21 03 321 1418*		
5 poles, A-coding	21 03 321 1518*		
8 poles, A-coding	21 03 321 1818*		
Packaging: 1 piece incl. housing			
Male			
5 poles, A-coding, rear mounting	21 03 321 1530*		
8 poles, A-coding, rear mounting	21 03 321 1830*		
5 poles, A-coding, front mounting	21 03 321 1531*		
8 poles, A-coding, front mounting	21 03 321 1831		
Housing			
Packaging: 10 pieces in a tube			
for rear mounting	21 03 301 1000		
for front mounting	21 03 301 1001		

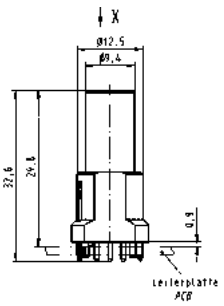

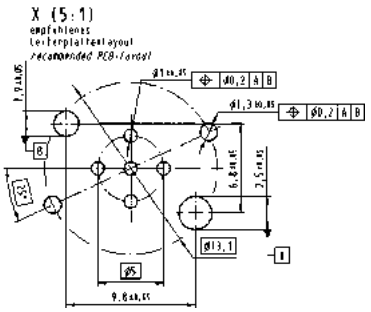

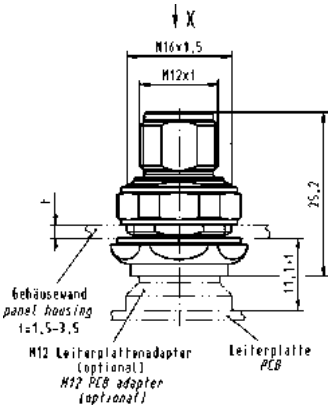

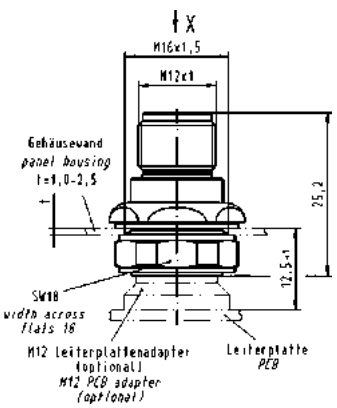

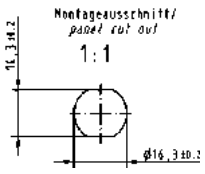

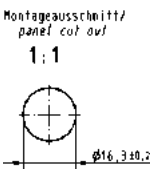

Further information and data sheets see www.HARTING.com
* UL approval is in preparation

M12 PCB adapter shielded A-coded

Mating face

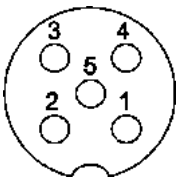

A-coding
Mating face
acc. to IEC 61076-2-101

Circular Connectors

Identification	Part number	Drawing	Dimensions in mm
M12 PCB adapter, shielded			
Packaging: 60 pieces in a tray **Order housing separately**			
Female			
4 poles, A-coding	21 03 321 2418*		
5 poles, A-coding	21 03 321 2518*		
8 poles, A-coding	21 03 321 2818*		
Packaging: 1 piece incl. housing			
Female			
5 poles, A-coding, rear mounting	21 03 321 2530*		
8 poles, A-coding, rear mounting	21 03 321 2830*		
5 poles, A-coding, front mounting	21 03 321 2531*		
8 poles, A-coding, front mounting	21 03 321 2831		
Housing			
Packaging: 10 pieces in a tube			
for rear mounting	21 03 301 2000		
for front mounting	21 03 301 2003		

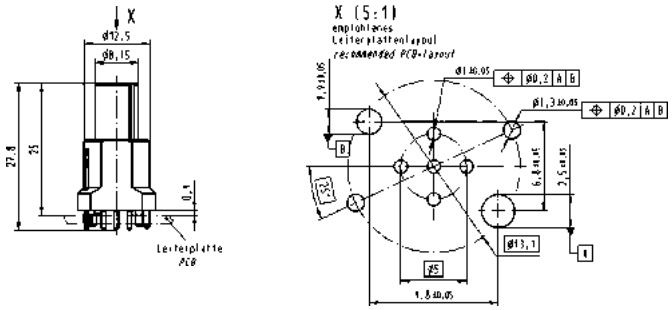

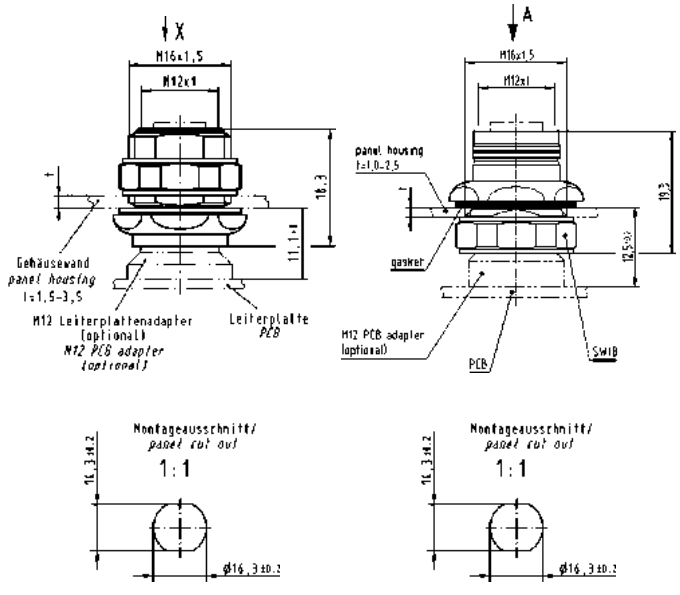

Further information and data sheets see www.HARTING.com
* UL approval is in preparation

Identification	Part number	Drawing
M12-male moving load A-coding	21 03 030 1400	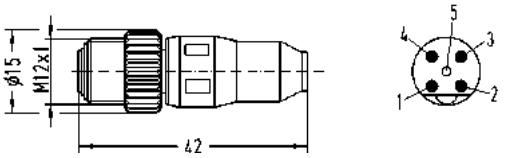
HARTING M12 T-Coupler Profibus A-coding	21 03 321 9400 21 03 319 9501	
Crimping tool for M12 Crimp	09 99 000 0501	
Accessories M12 Crimp		
Locator		
for D-Sub contacts	09 99 000 0531	
for contact 21 01 100 9020	61 03 600 0023	
D-Sub single contacts (500 mating cycles)		
turned male contacts		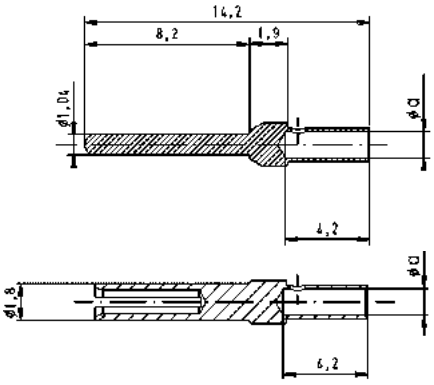
AWG 22 - 18 / 0.33 - 0.82 mm²	09 67 000 3576	
AWG 24 - 20 / 0.25 - 0.52 mm²	09 67 000 8576	
AWG 26 - 22 / 0.13 - 0.33 mm²	09 67 000 5576	
AWG 28 - 24 / 0.09 - 0.25 mm²	09 67 000 7576	
turned female contacts		
AWG 22 - 18 / 0.33 - 0.82 mm²	09 67 000 3476	
AWG 24 - 20 / 0.25 - 0.52 mm²	09 67 000 8476	
AWG 26 - 22 / 0.13 - 0.33 mm²	09 67 000 5476	
AWG 28 - 24 / 0.09 - 0.25 mm²	09 67 000 7476	
turned male contact for 8 pole connectors, A-coding, AWG 26 - 22	21 01 100 9020	
M12 dynamometric screwdriver Tightening torque 0.6 Nm		
for M12-S SW 13	09 99 000 0382	
for M12 Slim design SW 15	09 99 000 0646	
for M12-L SW 17	09 99 000 0384	

D-Sub contacts

Part number	AWG	Tool settings
09 67 000 3x76	18	6
	20	6
	22	5
09 67 000 8x76	20, 22, 24	6
09 67 000 5x76	22, 24, 26	6

	a
AWG 22 - 18	1.34
AWG 24 - 20	1.13
AWG 26 - 22	0.88

Identification	Part number	Drawing	Dimensions in mm
Seal M12-S for 2.9 - 4.0 mm cable Ø for 4 - 5.1 mm cable Ø	21 01 010 2011 21 01 010 2001	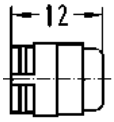	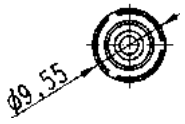
Seal M12-L unshielded for 4.7 - 6 mm cable Ø for 6 - 8 mm cable Ø	21 01 010 2015 21 01 010 2007	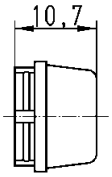	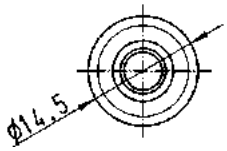
Set of seals M12-L shielded for 4.5 - 5.4 mm cable Ø for 5.4 - 7.2 mm cable Ø for 7.2 - 8.8 mm cable Ø	21 01 010 2017	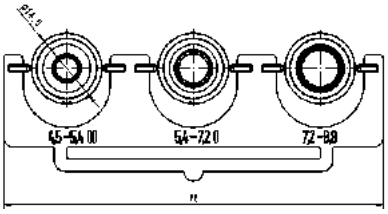	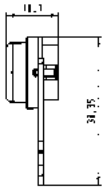
Cap M12 for IP65 / 67 Seals material Viton Plastic cap for female	21 01 000 0003	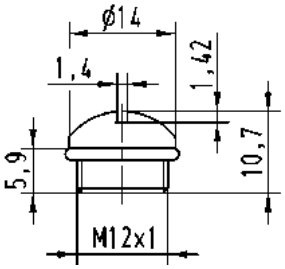	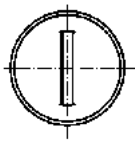
Accessories M12 Lock nut	21 01 000 0018		

Identification	Part number	Drawing	Dimensions in mm
Cap metal M12 for IP65 / 67 M12 metal cap for male side with cord 	21 01 000 0033	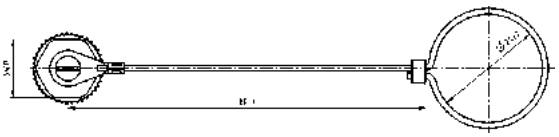	
Cap metal M12 for IP65 / 67 M12 metal cap for male side with cable clip 	21 01 000 0038		
Cap metal M12 for IP65 / 67 M12 metal cap for female side with cord 	21 01 000 0030	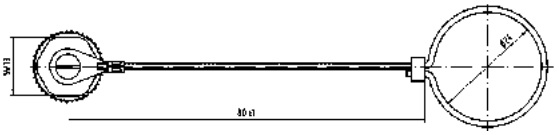	
Cap metal M12 for IP65 / 67 M12 metal cap for female side with cable clip 	21 01 000 0031	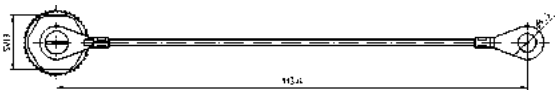	

Notes

Specifications IEC 60352-4

Approval

Mating face

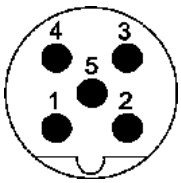

B-coding
Mating face
acc. to IEC 61076-2-101

Technical characteristics M12 – B-coding

Type M12 B-coded	***HARAX*® M12 L shielded**	**M12 Crimp**

General data

Conductor cross section	0.25 - 0.34 mm² AWG 24-22	0.13 - 0.75 mm² AWG 26-18
Diameter of individual strands	≥ 0.1 mm	X
Conductor insulation material	PVC, Zell-PE	X
Conductor diameter	2 - 2.6 mm	2.0 - 2.3 mm
Cable diameter	7.0 - 8.8 mm	4 poles: 4.5 - 8.8 mm 5 poles: 4.5 - 8.8 mm
Temperature range	-40 °C … +85 °C	-40 °C … +85 °C
Temperature during connection	-5 °C … +50 °C	-5 °C … +50 °C
Degree of protection	IP65 / 67	IP67
Mating cycles	100	500
Tightening torque connector / hexagonal wrench	0.6 Nm / SW 17	0.5 Nm / SW 17

Electrical characteristics

Rated current	4 A	4 A
Rated voltage	32 V	250 V
Rated impulse voltage	1.5 kV	1.5 kV
Contact resistance	10 mΩ	10 mΩ
Insulation resistance	10^8 Ω	10^8 Ω
Pollution degree	3	3
Overvoltage category	3	3
Isolation group	1	1

Materials

Contact material	Brass	Brass
Contact plating	Gold	Gold
Contact carrier material	PA unreinforced	PA
Housing material	PA unreinforced	PA

Technical characteristics M12 – B-coding

Current carrying capacity

The current carrying capacity is limited by maximum temperature of materials for inserts and contacts including terminals. The current capacity-curve is valid for continuous, not interruptet current-loaded contacts of connectors when simultaneous power on all contacts is given, without exceeding the maximum temperature.

Control and test procedures according to DIN IEC 60 512-5.

M12-L
3 poles, 4 poles

1 = Wire gauge 0.34 mm²
2 = Wire gauge 0.75 mm²

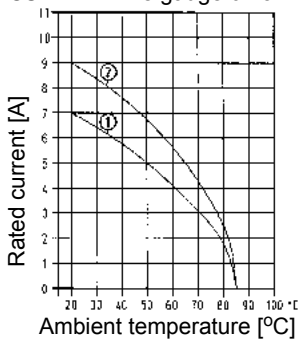

M12, Crimp

1 = Wire gauge 0.34 mm² / 0.5 mm²

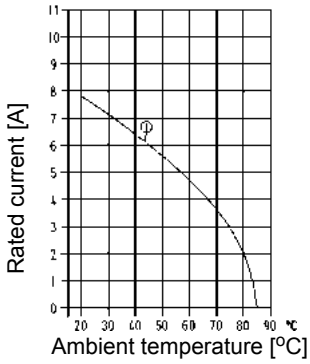

Mating face

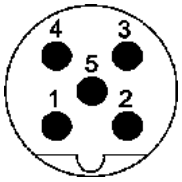

B-coding
Mating face
acc. to IEC 61076-2-101

Applications / Advantages

- B-coding for field bus systems e.g. Profibus, DeviceNet or CANopen
- Available with crimp resp. *HARAX*® rapid termination, or as overmoulded system cable in various lengths
- Shielding by the hood
- Easy handling, quick assembly

Identification	Part number	Drawing	Dimensions in mm
HARAX® M12-L, shielded Male 2 poles, B-coding 0.25 - 0.34 mm² / AWG 24 - 22	21 03 241 1301	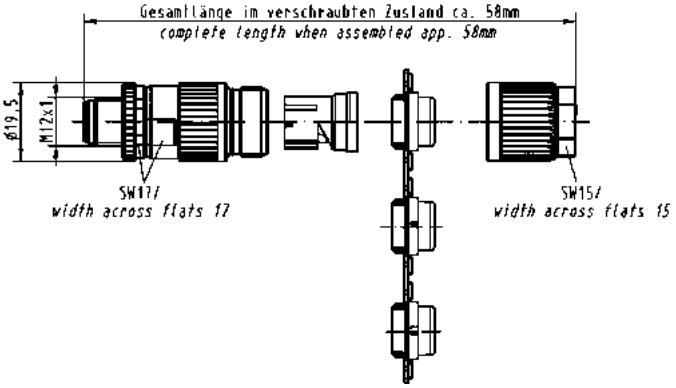	

Mating face

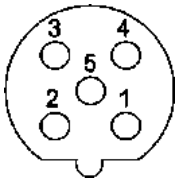

B-coding
Mating face
acc. to IEC 61 076-2-101

Identification	Part number	Drawing	Dimensions in mm
HARAX® M12-L, shielded Female 2 poles, B-coding 0.25 - 0.34 mm² / AWG 24 - 22	21 03 241 2301	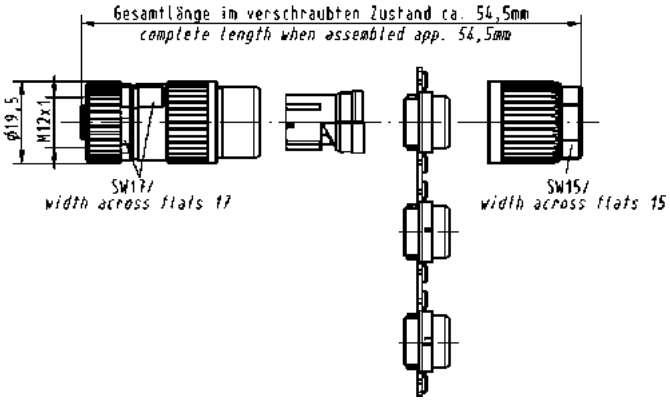	

M12 Crimp B-coded

Mating face

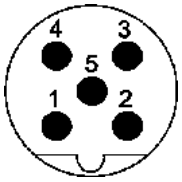

B-coding
Mating face
acc. to IEC 61076-2-101

RoHS

Identification	Part number	Drawing	Dimensions in mm
M12 Crimp Male 5 poles, B-coding	21 03 841 1505	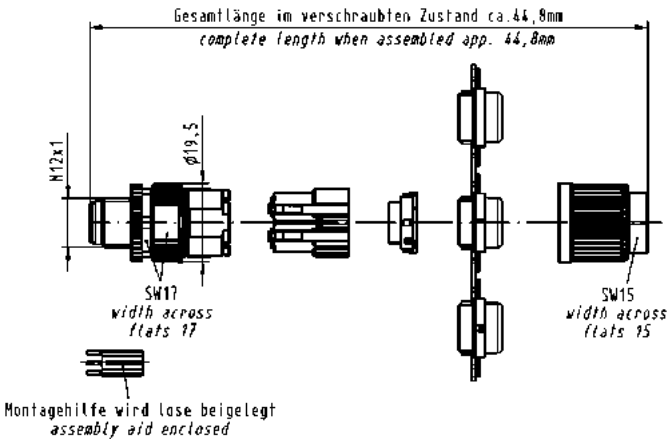	

Mating face

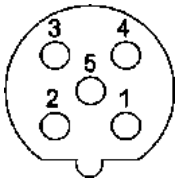

B-coding
Mating face
acc. to IEC 61 076-2-101

RoHS

Identification	Part number	Drawing	Dimensions in mm
M12 Crimp Female 5 poles, B-coding	21 03 841 2505	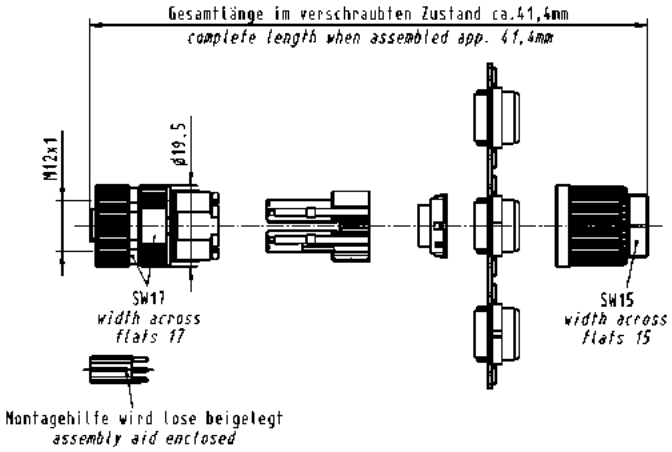	

M12 System cables, B-coding, 4 poles

Male, 4 poles

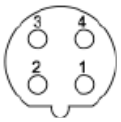

Female, 4 poles

Technical characteristics

System cables with M12 circular connectors shielded, B-coding

	4-poles	
	PVC	PUR
Rated voltage	max. 160 V AC/DC	max. 160 V AC/DC
Rated currrent / contact	max. 4 A at +40 °C	max. 4 A at +40 °C
Screw locking	M12x1, self securing	M12x1, self securing
Recommended torque	0.6 Nm	0.6 Nm
Temperature range (working and storage)	-30 °C … +80 °C	-30 °C … +80 °C
Degree of protection	IP67	IP67
Number of wires / wire gauge	2 x AWG 22	2 x AWG 24
Conductor insulation	PVC (rd, gn)	PE (rd, gn)
Arrangement of insulated strands	1 x Ø 0.65 mm	19 x Ø 0.14 mm
Sheath	PVC	PUR (UL, CSA)
Sheath colour	violet	violet
Outer diameter	Ø 8.0 ± 0.4 mm	Ø 8.5 ± 0.4 mm
Useable as trailing cable	no	yes
Halogen free acc. to	–	DIN VDE 0472 part 815
Flame retardant acc. to	DIN EN 60332-1-2	DIN EN 60332-1-2
Oil-resistant	IEC 80811-2-1 (4h/60°C)	DIN EN 60811-2-1

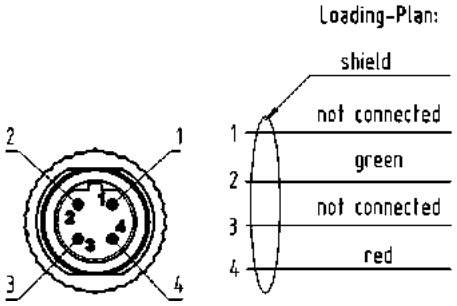

M12 System cables, B-coding, 4 poles

Male, 4 poles

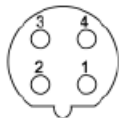

Female, 4 poles

Part number definition

2	1	3	4	X	X	X	X	X	X	X	X	X	X	X

Connector 1
88 Male straight
89 Female straight
90 Male angled
91 Female angled

Connector 2
00 No connector
88 Male straight
89 Female straight
90 Male angled
91 Female angled

Number of contacts
4 4 poles

Cable material
86 PVC
87 PUR

Preferred length*
005 0.5 m
010 1.0 m
015 1.5 m
020 2.0 m
050 5.0 m
075 7.5 m
100 10.0 m

* Other length on request

M12 Panel feed-through *HARAX*® B-coded

Mating face

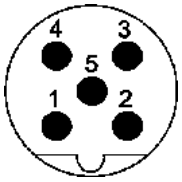

B-coding
Mating face
acc. to IEC 61076-2-101

Applications / Advantages

- B-coding for field bus systems e.g. Profibus, DeviceNet or CANopen
- For panel feed-through or PCB, straight version in IP20 or IP67, with or without assembled pigtail
- Available with crimp resp. *HARAX*® rapid termination
- Quick and easy assembly

Identification	Part number	Drawing	Dimensions in mm
HARAX® Panel feed-through Male 2 poles and shielding, B-coding 0.25 - 0.34 mm² / AWG 24 - 22 Cable diameter: 7 - 8.8 mm Panel thickness min. 2.5 mm max. 4.5 mm	21 03 341 1425	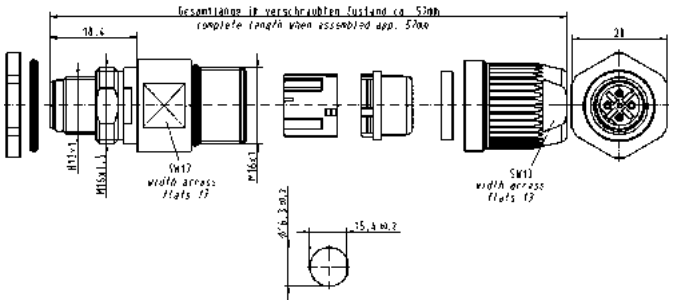	

M12 Panel feed-through *HARAX*® B-coded

Mating face

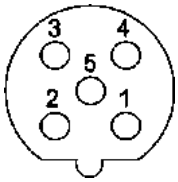

B-coding
Mating face
acc. to IEC 61076-2-101

Identification	Part number	Drawing	Dimensions in mm
HARAX® Panel feed-through Female 2 poles and shielding, B-coding 0.25 - 0.34 mm² / AWG 24 - 22 Cable diameter: 7 - 8.8 mm Panel thickness min. 2.5 mm max. 4.5 mm	21 03 341 2425	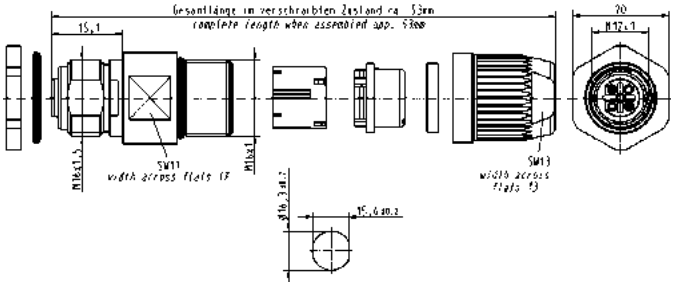	

M12 Panel feed-through Crimp B-coded

Mating face

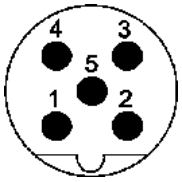

B-coding
Mating face
acc. to IEC 61076-2-101

RoHS

Identification	Part number	Drawing	Dimensions in mm
M12 Panel feed-through Crimp Male 5 poles, B-coding Panel thickness min. 2.5 mm max. 4.5 mm	21 03 841 1525	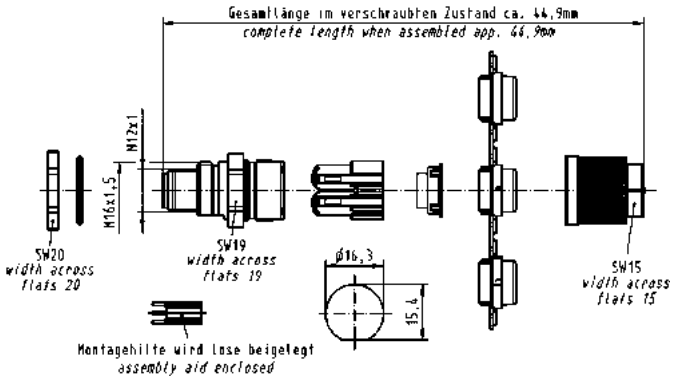	

M12 Panel feed-through Crimp B-coded

Mating face

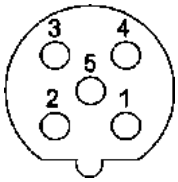

B-coding
Mating face
acc. to IEC 61 076-2-101

RoHS

Circular Connectors

Identification	Part number	Drawing	Dimensions in mm
M12 Panel feed-through Crimp Female 5 poles, B-coding Panel thickness min. 2.5 mm max. 4.5 mm	21 03 841 2525	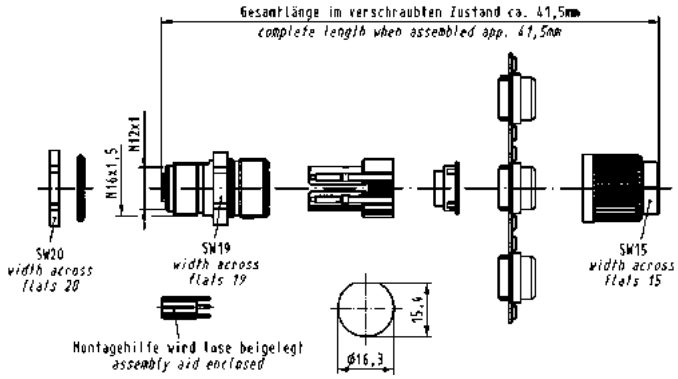	

Further information and data sheets see www.HARTING.com

M12 Panel feed-through B-coded

Mating face

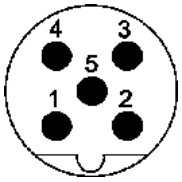

B-coding
Mating face
acc. to IEC 61076-2-101

RoHS

Identification	Part number	Drawing	Dimensions in mm

M12 Panel feed-through

Male
B-coding, 20 cm conductors,
0.25 mm²

Panel thickness
min. 2.0 mm
max. 5.0 mm

21 03 339 1301

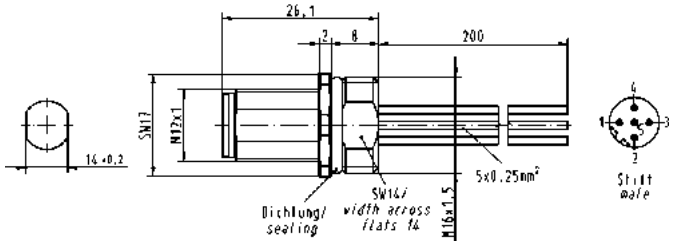

M12-male/female panel feed-through

B-coding

Panel thickness
min. 2.0 mm
max. 5.0 mm

21 03 330 1300

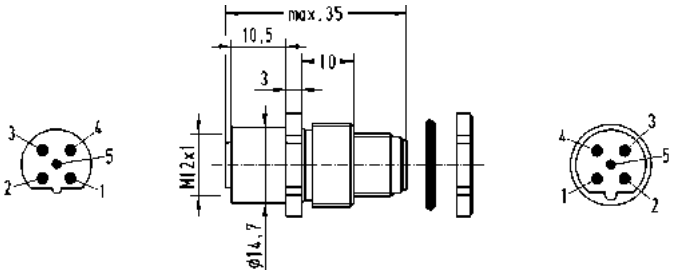

Rated voltage	24 V AC/DC
Thread	M16 x 1.5

Further information and data sheets see www.HARTING.com

M12 Panel feed-through B-coded

Mating face

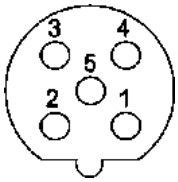

B-coding
Mating face
acc. to IEC 61 076-2-101

RoHS

Circular Connectors

Identification	Part number	Drawing	Dimensions in mm
M12 Panel feed-through Female B-coding, 20 cm conductors, 0.25 mm² Panel thickness min. 2.0 mm max. 5.0 mm	21 03 339 2301	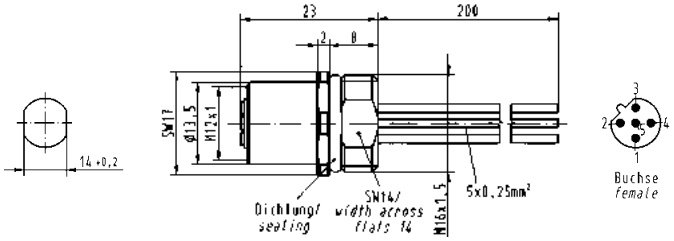	

Further information and data sheets see www.HARTING.com

M12 PCB adapter B-coded

Mating face

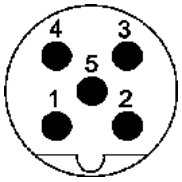

B-coding
Mating face
acc. to IEC 61076-2-101

RoHS

Technical characteristics: M12 PCB adapter

Degree of protection	IP20, IP67 (mated and locked)	Temperature during connection	-5 °C … +50 °C
Rated current	max. 4 A (dependant on PCB layout)	Termination	PIH
Rated voltage	50 V	Contact material	Copper alloy
Mating cycles	max. 100	Contact plating (mating side)	Au over Ni
Limiting temperature	-40 °C … +85 °C	Insulator material	PA

Identification	Part number	Drawing	Dimensions in mm
M12 PCB adapter Male, B-coding, straight 5 poles, IP20	21 03 341 1505	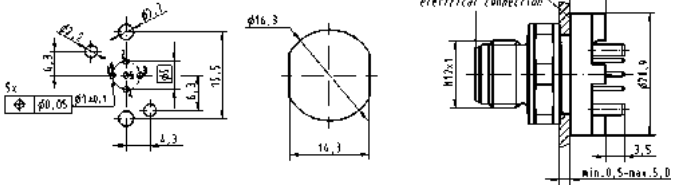	

M12 PCB adapter B-coded

Mating face

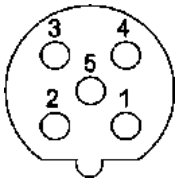

B-coding
Mating face
acc. to IEC 61 076-2-101

RoHS

Identification	Part number	Drawing	Dimensions in mm
M12 PCB adapter Female, B-coding, straight 5 poles, IP20	21 03 341 2505	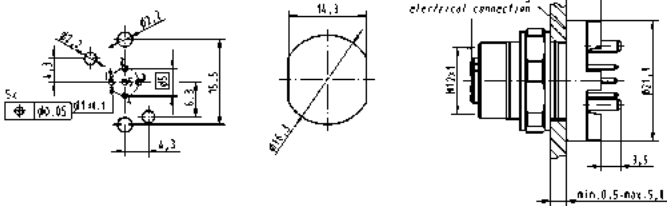	

M12 PCB adapter shielded B-coded

Mating face

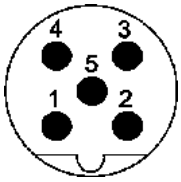

B-coding
Mating face
acc. to IEC 61076-2-101

Identification	Part number	Drawing	Dimensions in mm
M12 PCB adapter, shielded			
Packaging: 60 pieces in a tray **Order housing separately**			
Male 5 poles, B-coding	21 03 341 1518*		
Packaging: 1 piece incl. housing			
Male 5 poles, B-coding, rear mounting	21 03 341 1530*		
5 poles, B-coding, front mounting	21 03 341 1531*		
Housing			
Packaging: 10 pieces in a tube			
for rear mounting	21 03 301 1000		
for front mounting	21 03 301 1001		

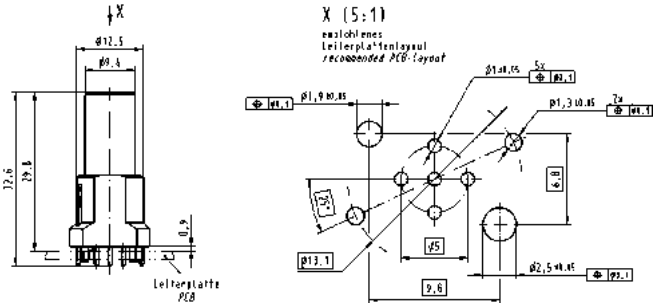

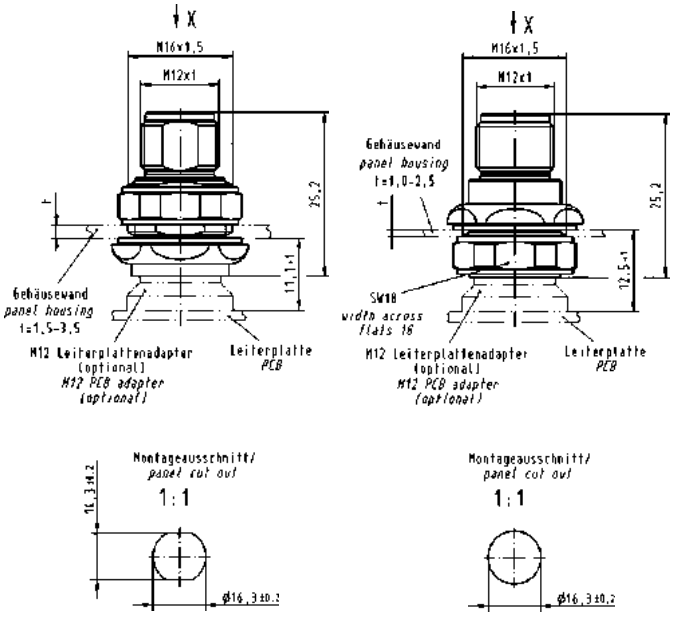

Further information and data sheets see www.HARTING.com
* UL approval is in preparation

M12 PCB adapter shielded B-coded

Mating face

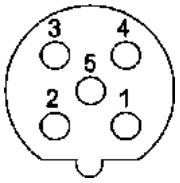

B-coding
Mating face
acc. to IEC 61076-2-101

Circular Connectors

Identification	Part number	Drawing	Dimensions in mm
M12 PCB adapter, shielded			
Packaging: 60 pieces in a tray **Order housing separately**			
Female 5 poles, B-coding	21 03 341 2518*		
Packaging: 1 piece incl. housing			
Female 5 poles, B-coding, rear mounting 5 poles, B-coding, front mounting	21 03 341 2530* 21 03 341 2531*		
Housing			
Packaging: 10 pieces in a tube			
for rear mounting	21 03 301 2000		
for front mounting	21 03 301 2003		

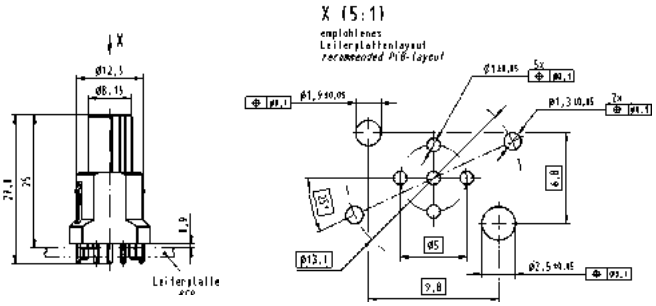

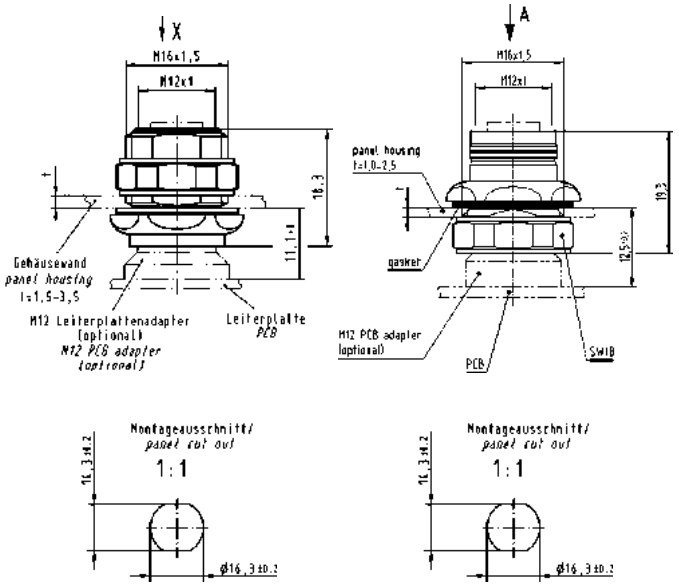

Further information and data sheets see www.HARTING.com
* UL approval is in preparation

Identification	Part number	Drawing
Crimping tool for M12 Crimp	09 99 000 0501	
Accessories M12 Crimp		
Locator	09 99 000 0531	
D-Sub single contacts (500 mating cycles)		
turned male contacts		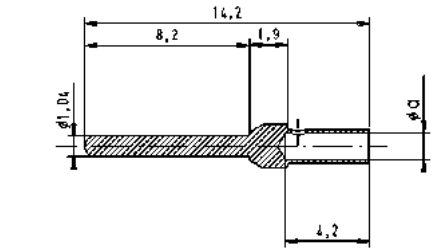
AWG 22-18 / 0.33-0.82 mm²	09 67 000 3576	
AWG 24-20 / 0.25-0.52 mm²	09 67 000 8576	
AWG 26-22 / 0.13-0.33 mm²	09 67 000 5576	
AWG 28-24 / 0.09-0.25 mm²	09 67 000 7576	
turned female contacts		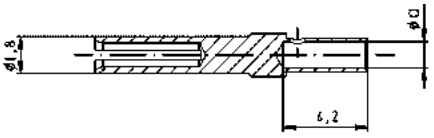
AWG 22-18 / 0.33-0.82 mm²	09 67 000 3476	
AWG 24-20 / 0.25-0.52 mm²	09 67 000 8476	
AWG 26-22 / 0.13-0.33 mm²	09 67 000 5476	
AWG 28-24 / 0.09-0.25 mm²	09 67 000 7476	
M12 dynamometric screwdriver Tightening torque 0.6 Nm		
for M12-S SW 13	09 99 000 0382	
for M12-L SW 17	09 99 000 0384	
Cap M12 for IP65 / 67 Seals material Viton Plastic cap for female	21 01 000 0003	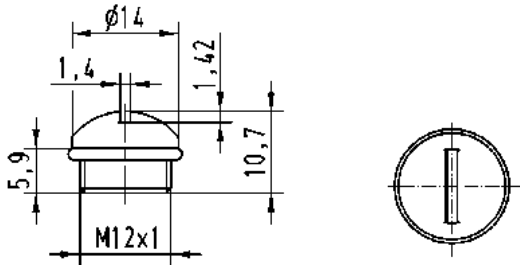

D-Sub contacts

Part number	AWG	Tool settings
09 67 000 3x76	18	6
	20	6
	22	5
09 67 000 8x76	20, 22, 24	6
09 67 000 5x76	22, 24, 26	6

	a
AWG 22-18	1.34
AWG 24-20	1.13
AWG 26-22	0.88

Identification	Part number	Drawing	Dimensions in mm
Cap metal M12 for IP65 / 67 M12 metal cap for male side with cord 	21 01 000 0033	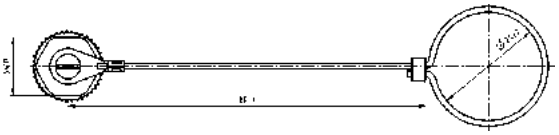	
Cap metal M12 for IP65 / 67 M12 metal cap for male side with cable clip 	21 01 000 0038		
Cap metal M12 for IP65 / 67 M12 metal cap for female side with cord 	21 01 000 0030	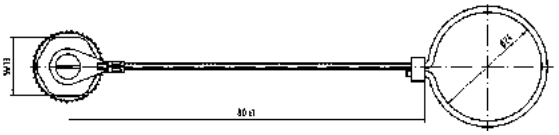	
Cap metal M12 for IP65 / 67 M12 metal cap for female side with cable clip 	21 01 000 0031	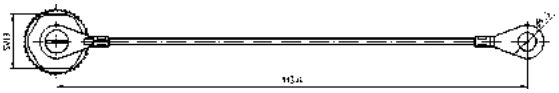	

M12 Accessories

Identification	Part number	Drawing	Dimensions in mm
M12-male moving load B-coding	21 03 030 1300	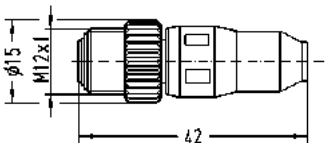 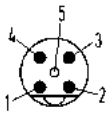	
HARTING M12 T-Coupler	21 03 341 6401		
Seal M12-L unshielded for 4.7 - 6 mm cable Ø for 6 - 8 mm cable Ø	21 01 010 2015 21 01 010 2007	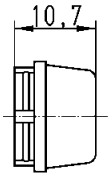 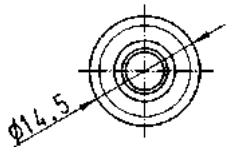	
Set of seals M12-L shielded for 4.5 - 5.4 mm cable Ø for 5.4 - 7.2 mm cable Ø for 7.2 - 8.8 mm cable Ø	21 01 010 2017	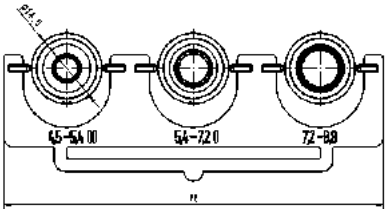 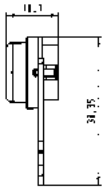	
Accessories M12 Lock nut	21 01 000 0018		

Further information and data sheets see www.HARTING.com

Notes

M12 D-coding

Specifications IEC 60352-4

Approval

Mating face

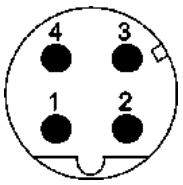

D-coding
Mating face
acc. to IEC 61076-2-101

Technical characteristics M12 – D-coding

Type M12 D-coded	*HARAX*® M12 L shielded	M12 Crimp	M12 preLink®
General data			
Conductor cross section	0.14 - 0.34 mm² AWG 26-22 0.34 - 0.5 mm² AWG 22-20	0.13 - 0.75 mm² AWG 26-18	0.10 - 0.34 mm² AWG 27-22
Diameter of individual strands	≥ 0.1 mm	X	≥ 0.1 mm
Conductor insulation material	PVC/PE	X	PVC/PE
Conductor diameter	1.2 - 2.0 mm	2.0 - 2.3 mm	0.8 - 1.6 mm
Cable diameter	4.5 - 8.8 mm	4 poles: 4.5 - 8.8 mm 5 poles: 4.5 - 8.8 mm	6.3 - 6.7 mm
Temperature range	-40 °C … +85 °C	-40 °C … +85 °C	-40 °C … +85 °C
Temperature during connection	-5 °C … +50 °C	-5 °C … +50 °C	–
Degree of protection	IP65 / 67	IP67	IP65 / IP67
Mating cycles	100	500	250
Tightening torque connector / Hexagonal wrench	0.6 Nm / SW 17	0.6 Nm / SW 17	0.6 Nm / SW 17
Electrical characteristics			
Rated current	4 A	4 A	1 A
Rated voltage	50 V	250 V	48 V
Rated impulse voltage	1.5 kV	1.5 kV	1.5 kV
Contact resistance	10 mΩ	10 mΩ	10 mΩ
Insulation resistance	10^8 Ω	10^8 Ω	10^8 Ω
Pollution degree	3	3	3
Overvoltage category	3	3	3
Isolation group	1	1	–
Transmission performance (Category)	Cat. 5	Cat. 5	Cat. 5
Materials			
Contact material	Brass	Brass	Brass
Contact plating	Gold	Gold	Gold
Contact carrier material	PA unreinforced	PA	–
Housing material	PA unreinforced	PA	Zinc die-cast

Technical characteristics M12 – D-coding

Current carrying capacity

The current carrying capacity is limited by maximum temperature of materials for inserts and contacts including terminals. The current capacity-curve is valid for continuous, not interruptet current-loaded contacts of connectors when simultaneous power on all contacts is given, without exceeding the maximum temperature.

Control and test procedures according to DIN IEC 60 512-5.

M12-L
3 poles, 4 poles

1 = Wire gauge 0.34 mm²
2 = Wire gauge 0.75 mm²

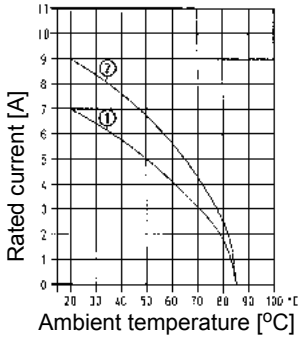

M12, Crimp

1 = Wire gauge 0.34 mm² / 0.5 mm²

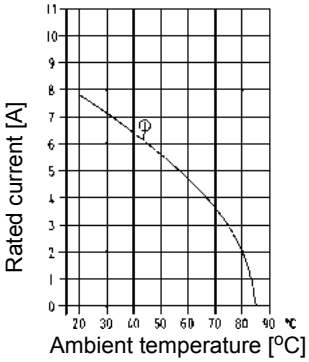

Technical characteristics M12 – D-coding, PCB adapter

M12, D-coding, straight, female, 4 poles
Wire gauge 0.5 mm²

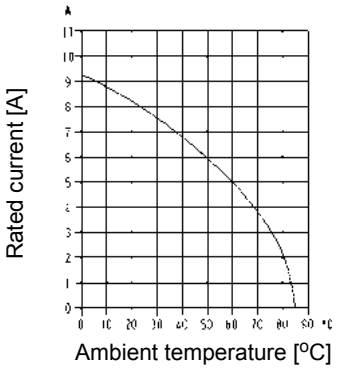

M12, D-coding, angled, female, 4 poles
Wire gauge AWG 22

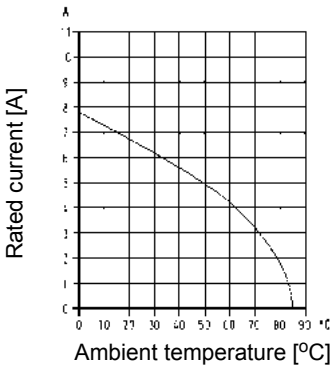

Mating face

D-coding
Mating face
acc. to IEC 61076-2-101

Applications / Advantages

- D-coding for Ethernet/Profinet applications
- Robust design
- 360° shielding termination
- Transmission performance Cat. 5

Identification	Part number	Drawing	Dimensions in mm
HARAX® M12-L, shielded Male 4 poles, D-coding 0.14 - 0.34 mm², AWG 26 - 22	21 03 281 1405	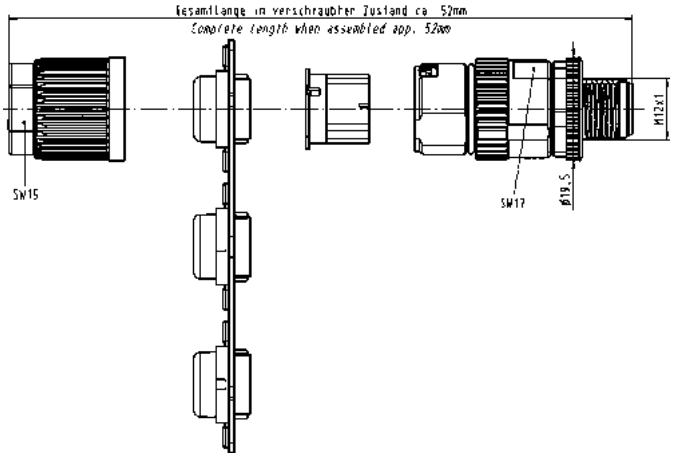	
Male 4 poles, D-coding 0.34 - 0.5 mm², AWG 22 - 20	21 03 282 1405		

Mating face

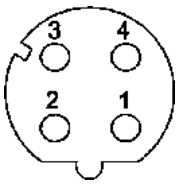

D-coding
Mating face
acc. to IEC 61076-2-101

Identification	Part number	Drawing	Dimensions in mm
***HARAX*® M12-L, shielded**			
Female 4 poles, D-coding 0.14 - 0.34 mm², AWG 26 - 22	21 03 281 2405	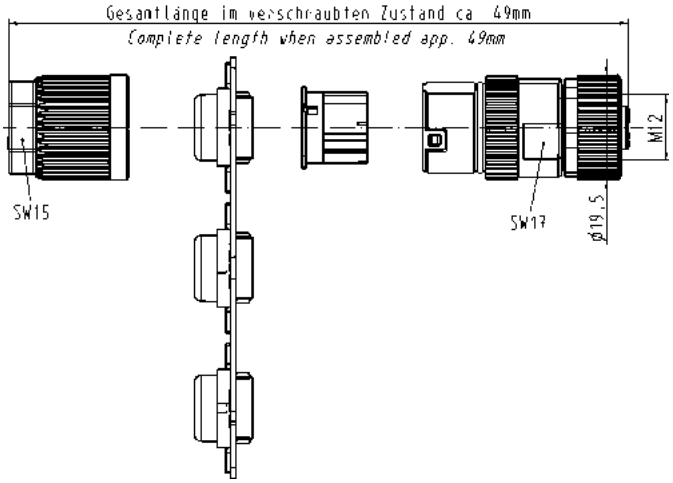	
Female 4 poles, D-coding 0.34 - 0.5 mm², AWG 22 - 20	21 03 282 2405		

M12 Crimp D-coded

Mating face

D-coding
Mating face
acc. to IEC 61076-2-101

Identification	Part number	Drawing	Dimensions in mm
M12 Crimp, shielded Male 4 poles, D-coding	21 03 882 1415	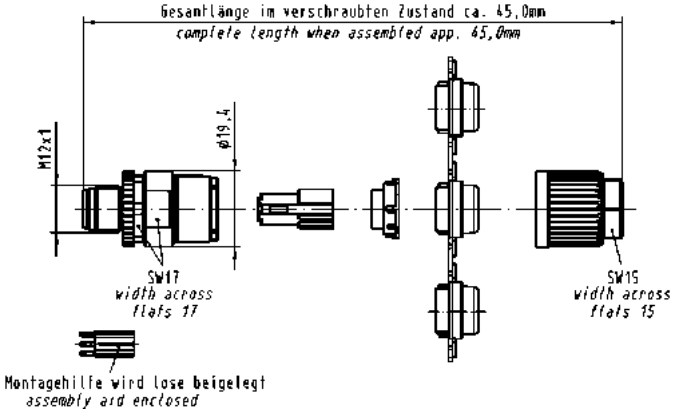	

M12 Crimp D-coded

Mating face

D-coding
Mating face
acc. to IEC 61 076-2-101

Identification	Part number	Drawing	Dimensions in mm
M12 Crimp Slim design, shielded Male 4 poles, D-coding Cable: 5.7 - 8.8 mm outer diameter	21 03 881 1405*	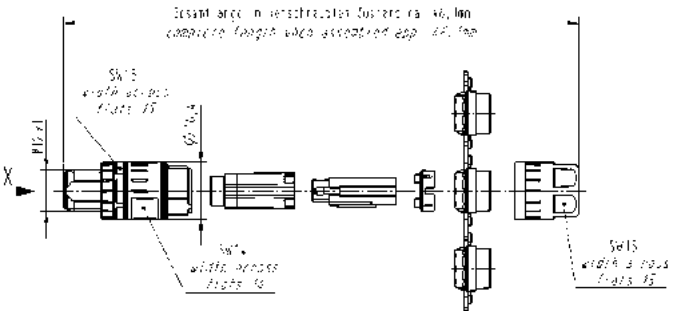	
M12 Crimp, shielded Male 4 poles, D-coding angled	21 03 882 3405*	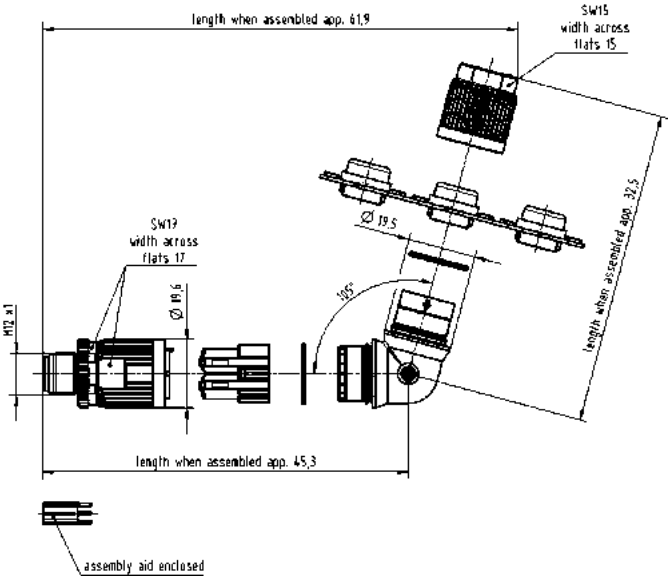	

Further information and data sheets see www.HARTING.com
* UL approval is in preparation

M12 Crimp D-coded

Mating face

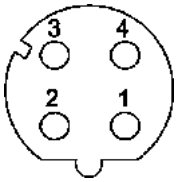

D-coding
Mating face
acc. to IEC 61076-2-101

RoHS

Identification	Part number	Drawing	Dimensions in mm
M12 Crimp, shielded Female 4 poles, D-coding	21 03 882 2405	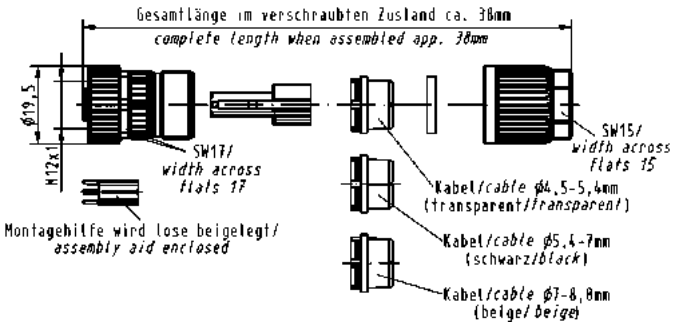	

M12 preLink® D-coded

Mating face

D-coding
Mating face
acc. to IEC 61076-2-101

RoHS

Identification	Part number	Drawing	Dimensions in mm
preLink® M12 housing	20 82 000 1210		
preLink® M12 male module Male 4 poles, D-coding	20 82 005 1214		
preLink® terminal module (Pack with 10 pieces) terminal block with IDC termination Number of contacts: 8 Conductor cross section: AWG 22/23 (24) solid and stranded Conductor diameter: Ø 1.3 - 1.6 mm Colour: yellow	20 82 000 0001		
Conductor cross section: AWG 26/27 solid and stranded Conductor diameter: Ø 0.8 - 1.1 mm Colour: white	20 82 000 0003		
Assembly tool	20 82 000 9901		

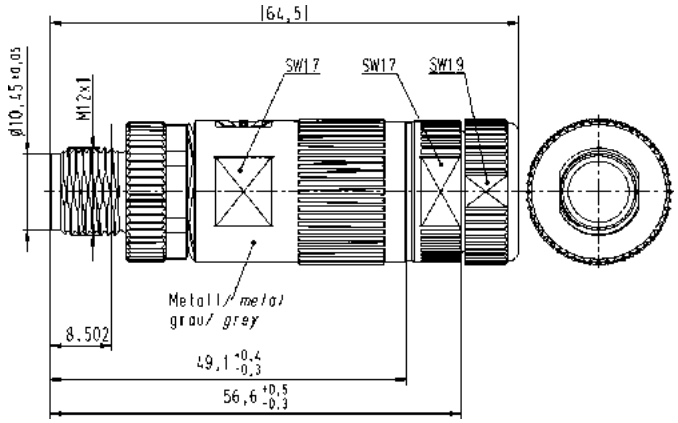

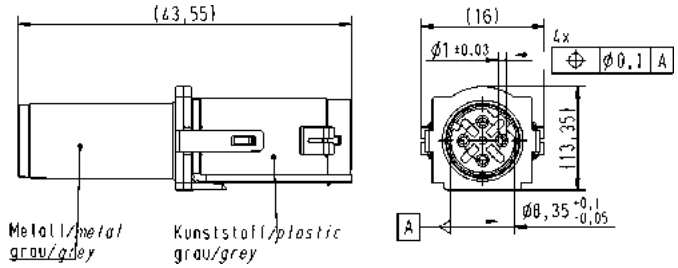

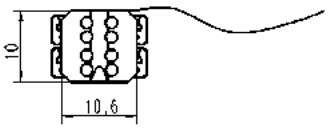

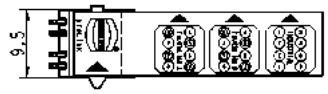

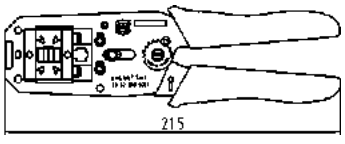

Further information and data sheets see www.HARTING.com

M12 System cables, D-coding, 4 poles

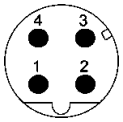

Male, 4 poles

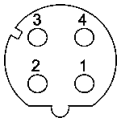

Female, 4 poles

Technical characteristics

System cables with M12 circular connectors shielded, D-coding

	4 poles	
	PVC	PUR
Rated voltage	max. 160 V AC/DC	max. 160 V AC/DC
Rated currrent / contact	max. 4 A at +40 °C	max. 4 A at +40 °C
Screw locking	M12x1, self securing	M12x1, self securing
Recommended torque	0.6 Nm	0.6 Nm
Temperature range (working and storage)	-30 °C … +80 °C	-30 °C … +80 °C
Degree of protection	IP67	IP67
Number of wires / wire gauge	4 x 0.34 mm²	4 x 0.34 mm²
Conductor insulation	PE (ye, wh, og, bu)	PE (ye, wh, og, bu)
Arrangement of insulated strands	7 x Ø 0.25 mm (AWG 22)	7 x Ø 0.25 mm (AWG 22)
Sheath	PVC	PUR (UL, CSA)
Sheath colour	green	green
Outer diameter	Ø 6.5 ± 0.2 mm	Ø 6.5 ± 0.2 mm
Useable as trailing cable	no	yes
Halogen free acc. to	–	IEC 60754
Flame retardant acc. to	UL 1685 (CSA FT4)	IEC 60332-1-2 und UL 2556 VW1
Oil-resistant	IEC 80811-2-1 (4h/70°C)	IEC 60811-2-1 und UL13

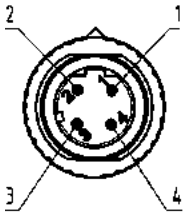

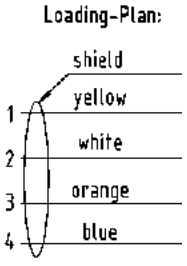

M12 System cables, D-coding, 4 poles

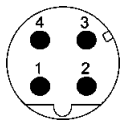

Male, 4 poles

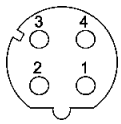

Female, 4 poles

Part number definition

2	1	3	4	X	X	X	X	X	X	X	X	X	X	X

Connector 1
92 Male straight
93 Female straight
94 Male angled
95 Female angled

Connector 2
00 No connector
92 Male straight
93 Female straight
94 Male angled
95 Female angled

Number of contacts
4 4 poles

Cable material
05 PVC
77 PUR

Preferred length*
005 0.5 m
010 1.0 m
015 1.5 m
020 2.0 m
050 5.0 m
075 7.5 m
100 10.0 m

* Other length on request

M12 Panel feed-through *HARAX*® D-coded

Mating face

D-coding
Mating face
acc. to IEC 61076-2-101

Applications / Advantages

- D-coding for Ethernet/Profinet apllications
- Patent *HARAX*® fast termination
- Robust design
- 360° shielding termination
- Transmission performance Cat. 5

Identification	Part number	Drawing	Dimensions in mm
HARAX® Panel feed-through Male 4 poles, D-coding 0.14 - 0.34 mm² / AWG 26 - 22 Panel thickness min. 2.5 mm max. 4.5 mm	21 03 381 1425	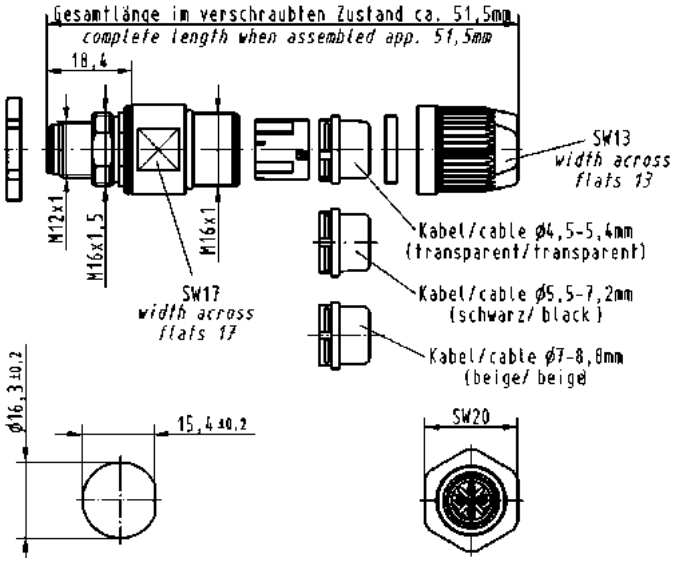	

M12 Panel feed-through *HARAX*® D-coded

Mating face

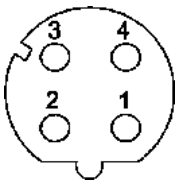

D-coding
Mating face
acc. to IEC 61076-2-101

Circular Connectors

Identification	Part number	Drawing	Dimensions in mm
HARAX® Panel feed-through Female 4 poles, D-coding 0.14 - 0.34 mm² / AWG 26 - 22 Panel thickness min. 2.5 mm max. 4.5 mm	21 03 381 2425	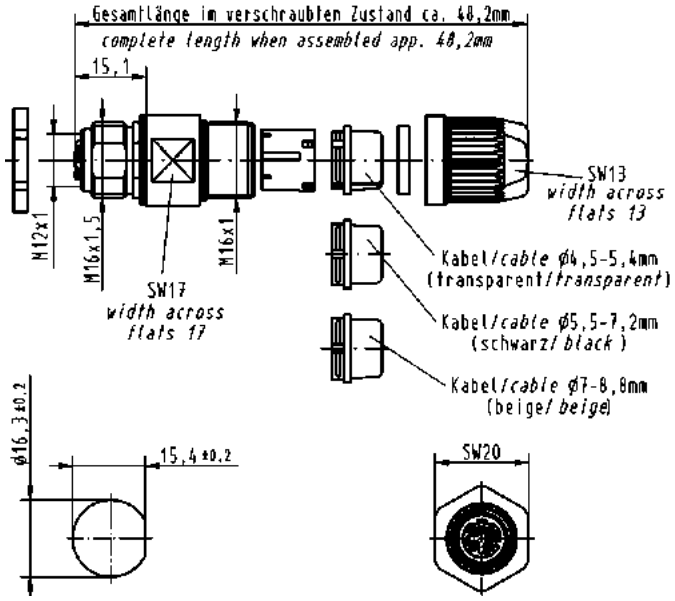	

M12 Panel feed-through Crimp D-coded

Mating face

D-coding
Mating face
acc. to IEC 61076-2-101

Identification	Part number	Drawing	Dimensions in mm
M12 Panel feed-through Crimp Male 4 poles, D-coding Panel thickness min. 2.5 mm max. 4.5 mm	21 03 882 1425	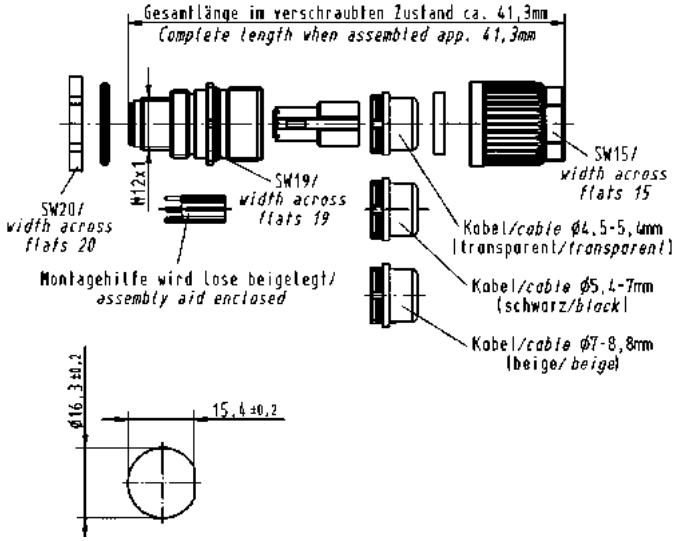	

M12 Panel feed-through Crimp D-coded

Mating face

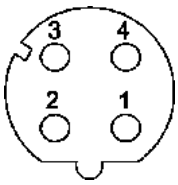

D-coding
Mating face
acc. to IEC 61076-2-101

Identification	Part number	Drawing	Dimensions in mm
M12 Panel feed-through Crimp Female 4 poles, D-coding Panel thickness min. 2.5 mm max. 4.5 mm	21 03 882 2425	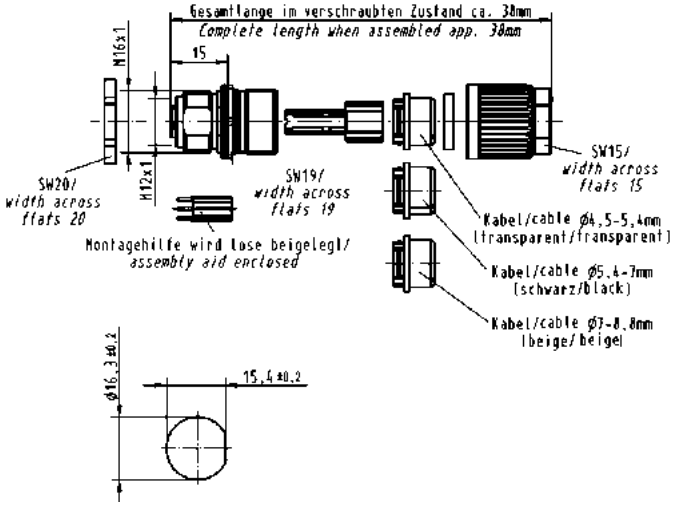	

M12 Panel feed-through D-coded

Mating face

D-coding
Mating face
acc. to IEC 61076-2-101

RoHS

Identification	Part number	Drawing	Dimensions in mm
M12 Panel feed-through Male D-coding 50 cm conductors, AWG 22, 4 poles Panel thickness min. 2.0 mm max. 5.0 mm	21 03 371 1403	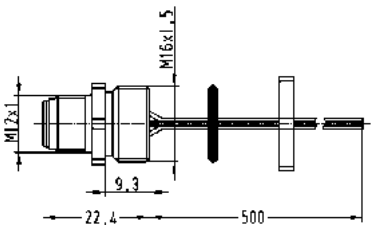 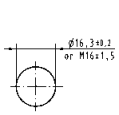 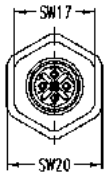 	

M12 Panel feed-through D-coded

Mating face

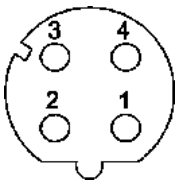

D-coding
Mating face
acc. to IEC 61 076-2-101

RoHS

Identification	Part number	Drawing	Dimensions in mm
M12 Panel feed-through Female D-coding 50 cm conductors, AWG 22, 4 poles Panel thickness min. 2.0 mm max. 5.0 mm	21 03 371 2403	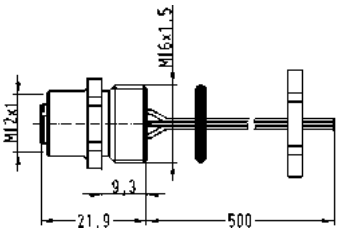 	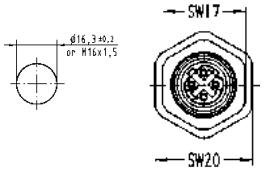

M12 Panel feed-through D-coded

Mating face

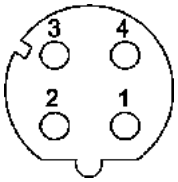

D-coding
Mating face
acc. to IEC 61076-2-101

Identification	Part number	Drawing	Dimensions in mm
M12 Female-RJ45 Panel feed-through 4 poles, D-coding angled Panel thickness min. 2.1 mm max. 4.5 mm	21 03 381 4401*	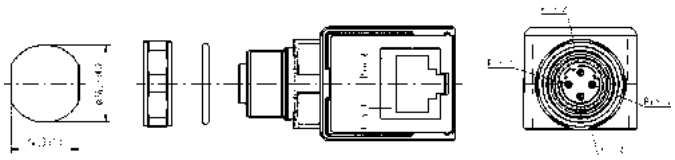	
M12 Female-RJ45 Panel feed-through 4 poles, D-coding straight Panel thickness min. 2.1 mm max. 4.5 mm	21 03 381 2401*	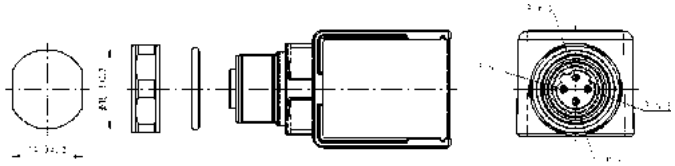	

Further information and data sheets see www.HARTING.com
* UL approval is in preparation

M12 Panel feed-through D-coded

Mating face

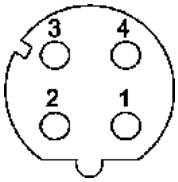

D-coding
Mating face
acc. to IEC 61076-2-101

Identification	Part number	Drawing	Dimensions in mm
M12 Gender Changer Female-Female 4 poles, D-coding 8 poles, X-coding	21 03 381 6402*	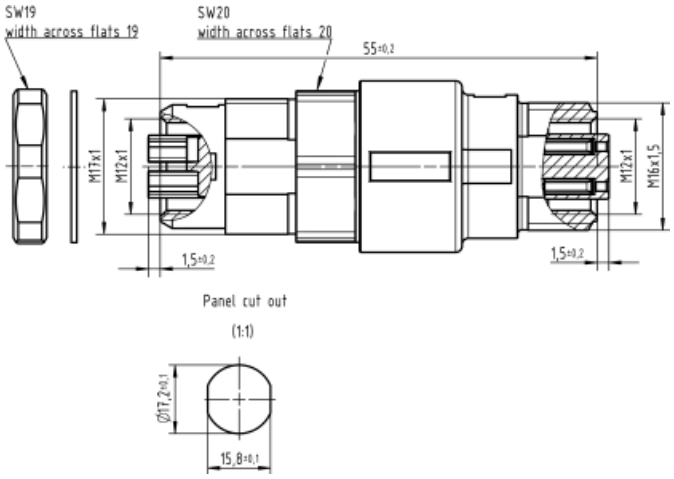	
M12 Gender Changer Female-Female 4 poles, D-coding Cat. 5	21 03 381 6401*	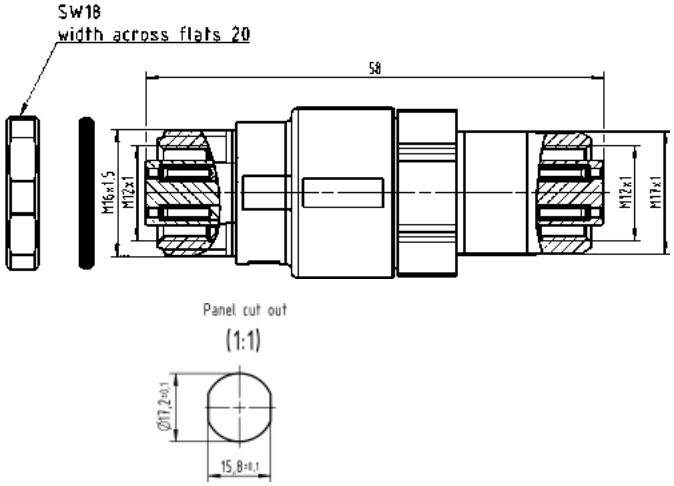	
Wall bracket 	21 01 000 0036	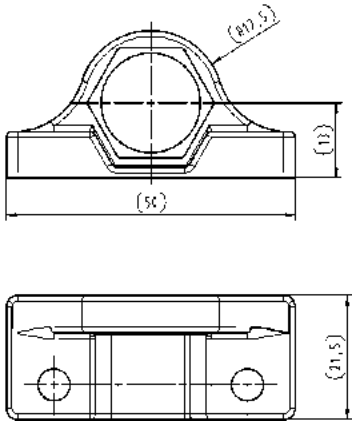	

Further information and data sheets see www.HARTING.com
* UL approval is in preparation

M12 PCB adapter D-coded

Mating face

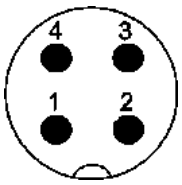

D-coding
Mating face
acc. to IEC 61076-2-101

Technical characteristics: M12 PCB adapter D-coded angled

Degree of protection	IP20, IP67 (mated and locked)	Temperature during connection	-5 °C … +50 °C
Rated current	max. 4 A (dependant on PCB layout)	Termination	Reflow
Rated voltage	50 V	Contact material	Copper alloy
Mating cycles	max. 100	Contact plating (mating side)	Au over Ni
Limiting temperature	-40 °C … +85 °C	Insulator material	LCP

Identification	Part number	Drawing	Dimensions in mm
M12 PCB adapter Male, D-coding, straight			
4 poles, IP67	21 03 371 1400	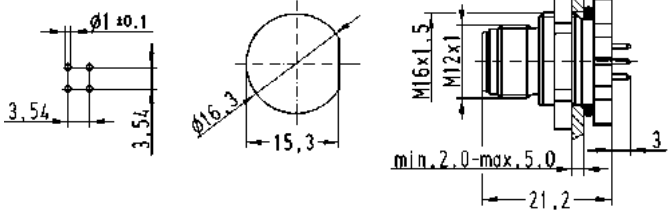	

Further information and data sheets see www.HARTING.com

M12 PCB adapter D-coded

Mating face

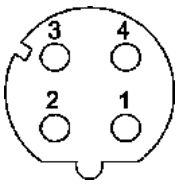

D-coding
Mating face
acc. to IEC 61076-2-101

Identification	Part number	Drawing	Dimensions in mm
M12 PCB adapter Female, D-coding, straight			
 4 poles, IP67	21 03 371 2415	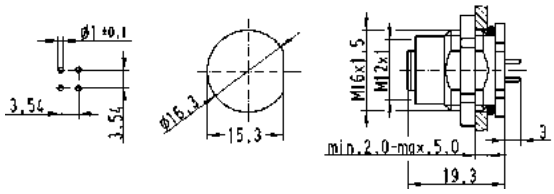	
 4 poles, IP20 4 poles, IP67	21 03 381 6410 21 03 381 6420	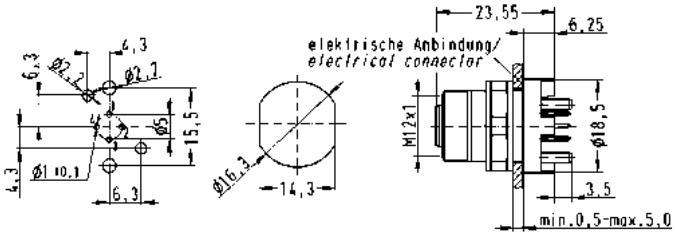	

M12 PCB adapter D-coded

Mating face

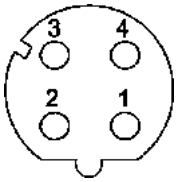

D-coding
Mating face
acc. to IEC 61076-2-101

RoHS

Identification		Part number
M12 PCB adapter Female, D-coding, angled, 4 poles		
without fixing hole	IP20	21 03 381 4410 [1]
	IP20	21 03 381 4411 [2]
	IP67	21 03 381 4430 [1]
with fixing hole	IP20	21 03 381 4412 [1]
	IP20	21 03 381 4413 [2]
	IP67	21 03 381 4432 [1]

Drawing

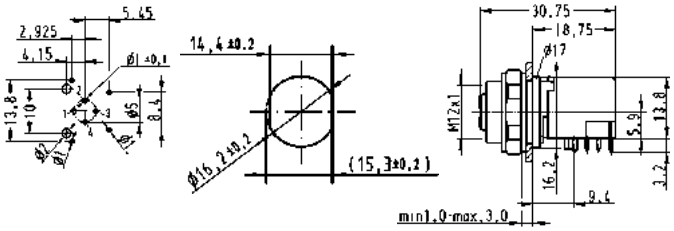

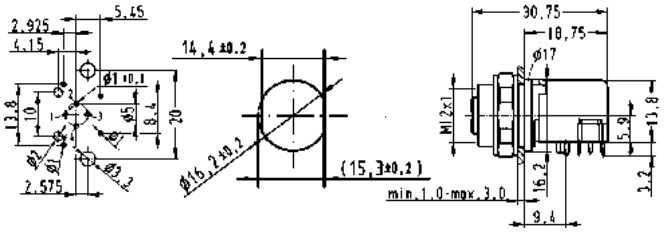

[1] Cable direction to the right

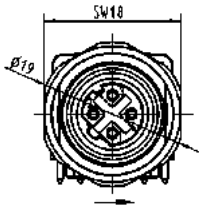

[2] Cable direction to the bottom

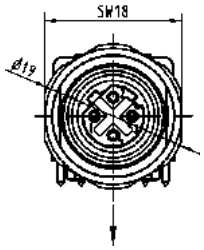

M12 PCB adapter shielded D-coded

Mating face

D-coding
Mating face
acc. to IEC 61076-2-101

Circular Connectors

Identification	Part number	Drawing	Dimensions in mm
M12 PCB adapter, shielded		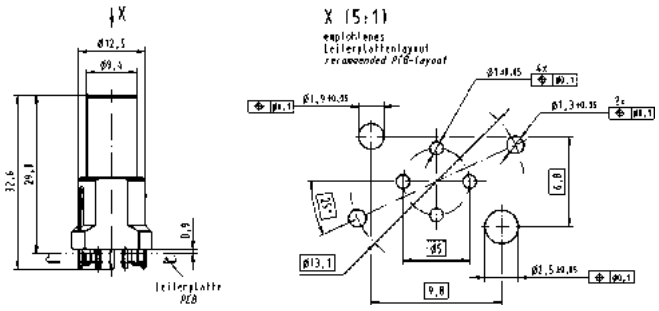	
Packaging: 60 pieces in a tray **Order housing separately**			
Male 4 poles, D-coding	21 03 381 1418*		
Packaging: 1 piece incl. housing			
Male 4 poles, D-coding, rear mounting 4 poles, D-coding, front mounting	 21 03 381 1430* 21 03 381 1431*		
Housing		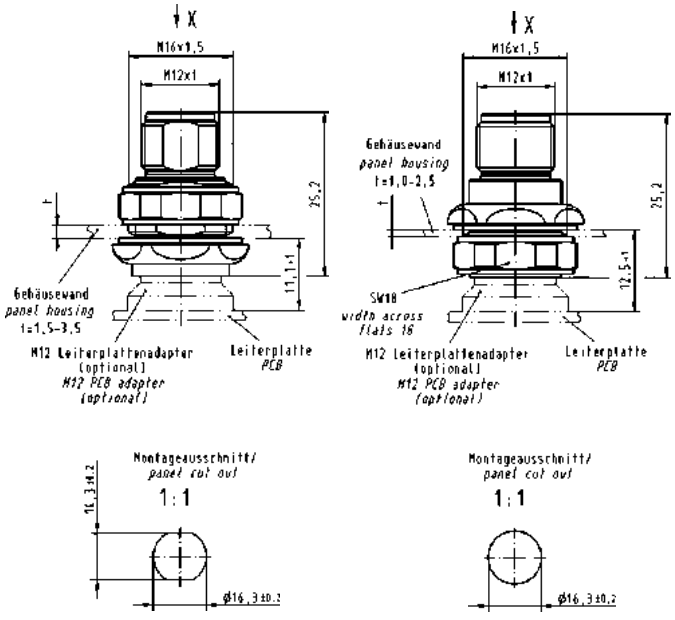	
Packaging: 10 pieces in a tube			
for rear mounting	21 03 301 1000		
for front mounting	21 03 301 1001		

Further information and data sheets see www.HARTING.com
* UL approval is in preparation

M12 PCB adapter shielded D-coded

Mating face

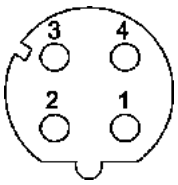

D-coding
Mating face
acc. to IEC 61076-2-101

Identification	Part number	Drawing	Dimensions in mm
M12 PCB adapter, shielded		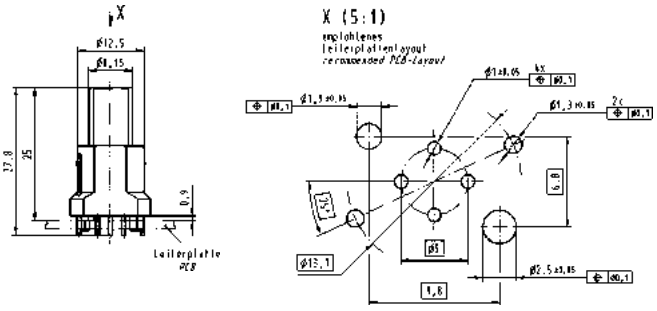	
Packaging: 60 pieces in a tray **Order housing separately**			
Female 4 poles, D-coding	21 03 381 2418*		
Packaging: 1 piece incl. housing			
Female 4 poles, D-coding, rear mounting 4 poles, D-coding, front mounting	21 03 381 2430* 21 03 381 2431*		
Housing		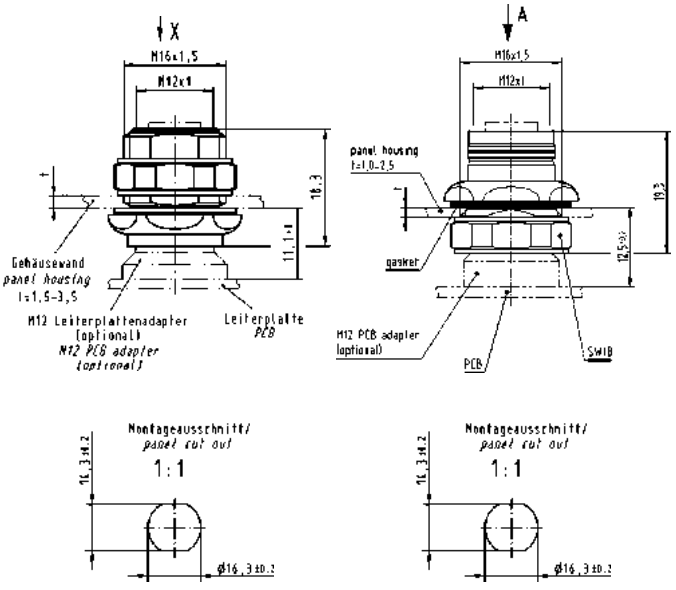	
Packaging: 10 pieces in a tube			
for rear mounting	21 03 301 2000		
for front mounting	21 03 301 2003		

Further information and data sheets see www.HARTING.com
* UL approval is in preparation

Identification	Part number	Drawing
Crimping tool for M12 Crimp	09 99 000 0501	
Accessories M12 Crimp **Locator**	09 99 000 0531	
D-Sub single contacts **(500 mating cycles)**		
turned male contacts		
AWG 22-18 / 0.33-0.82 mm²	09 67 000 3576	
AWG 24-20 / 0.25-0.52 mm²	09 67 000 8576	
AWG 26-22 / 0.13-0.33 mm²	09 67 000 5576	
AWG 28-24 / 0.09-0.25 mm²	09 67 000 7576	
turned female contacts		
AWG 22-18 / 0.33-0.82 mm²	09 67 000 3476	
AWG 24-20 / 0.25-0.52 mm²	09 67 000 8476	
AWG 26-22 / 0.13-0.33 mm²	09 67 000 5476	
AWG 28-24 / 0.09-0.25 mm²	09 67 000 7476	

D-Sub contacts

Part number	AWG	Tool settings
09 67 000 3x76	18	6
	20	6
	22	5
09 67 000 8x76	20, 22, 24	6
09 67 000 5x76	22, 24, 26	6

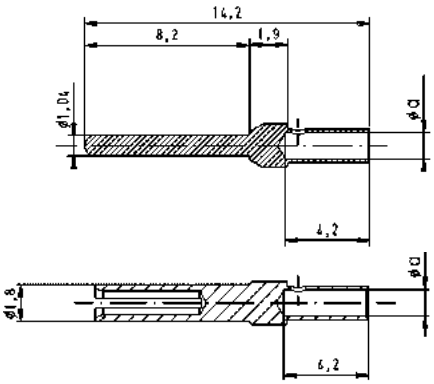

	a
AWG 22-18	1.34
AWG 24-20	1.13
AWG 26-22	0.88

M12 **dynamometric screwdriver** Tightening torque 0.6 Nm		
for M12 Slim design	SW 15	09 99 000 0646
for M12-L	SW 17	09 99 000 0384
Set of seals M12-L shielded for 4.5 - 5.4 mm cable Ø for 5.4 - 7.2 mm cable Ø for 7.2 - 8.8 mm cable Ø 	21 01 010 2017	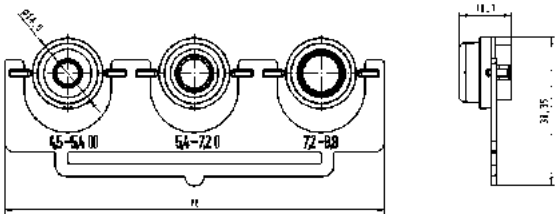
Accessories M12 **Lock nut**	21 01 000 0018	

Identification	Part number	Drawing	Dimensions in mm
Cap metal M12 for IP65 / 67 M12 metal cap for male side with cord 	21 01 000 0033	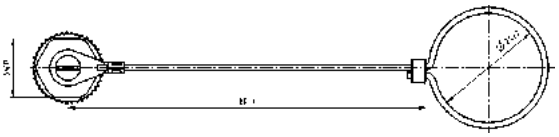	
Cap metal M12 for IP65 / 67 M12 metal cap for male side with cable clip 	21 01 000 0038		
Cap metal M12 for IP65 / 67 M12 metal cap for female side with cord 	21 01 000 0030	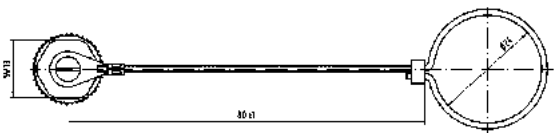	
Cap metal M12 for IP65 / 67 M12 metal cap for female side with cable clip 	21 01 000 0031	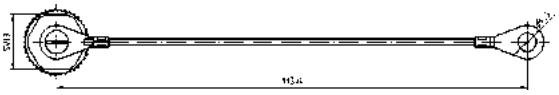	
Cap M12 for IP65 / 67 Seals material Viton Plastic cap for female 	21 01 000 0003	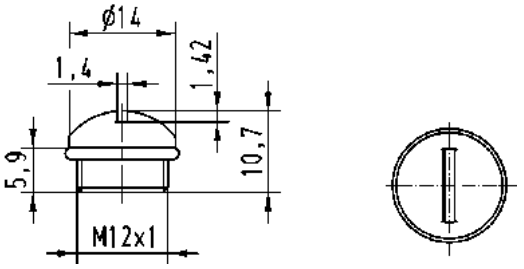	

Specifications IEC 60 352-4

Approval

Mating face

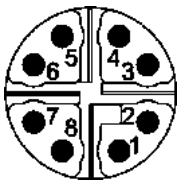

X-coding
Mating face
acc. to IEC 61 076-2-109

Technical characteristics M12 – X-coding

Type M12 X-coded	***har*-speed M12** ***har*-speed M12 Slim design**

General data

Conductor cross section	0.08 - 0.25 mm² AWG 28-23
Diameter of individual strands	–
Conductor insulation material	–
Conductor diameter	0.33 - 0.61 mm
Cable diameter	5.7 - 8.8 mm
Temperature range	-40 °C … +85 °C
Temperature during connection	-5 °C … +50 °C
Degree of protection	IP65 / 67
Mating cycles	500
Tightening torque connector / hexagonal wrench	0.6 Nm / SW 15

Electrical characteristics

Rated current	0.5 A
Rated voltage	48 V
Rated impulse voltage	0.8 kV
Contact resistance	15 mΩ
Insulation resistance	10^8 Ω
Pollution degree	3
Overvoltage category	3
Isolation group	1
Transmission performance (Category)	Cat. 6_A

Materials

Contact material	Brass
Contact plating	Gold
Contact carrier material	LCP
Housing material	ZP410

Further information and data sheets see www.HARTING.com
* UL approval is in preparation

Technical characteristics M12 – X-coding

Current carrying capacity

The current carrying capacity is limited by maximum temperature of materials for inserts and contacts including terminals. The current capacity-curve is valid for continuous, not interruptet current-loaded contacts of connectors when simultaneous power on all contacts is given, without exceeding the maximum temperature.

Control and test procedures according to DIN IEC 60512-9-1.

har-speed M12
8 poles

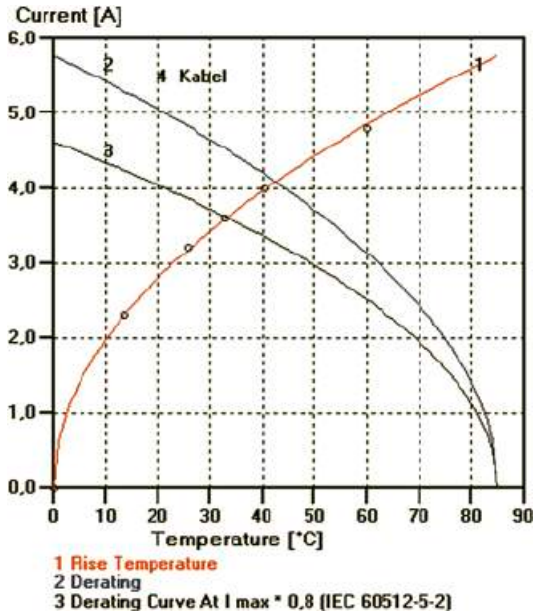

har-speed M12
PCB adapter

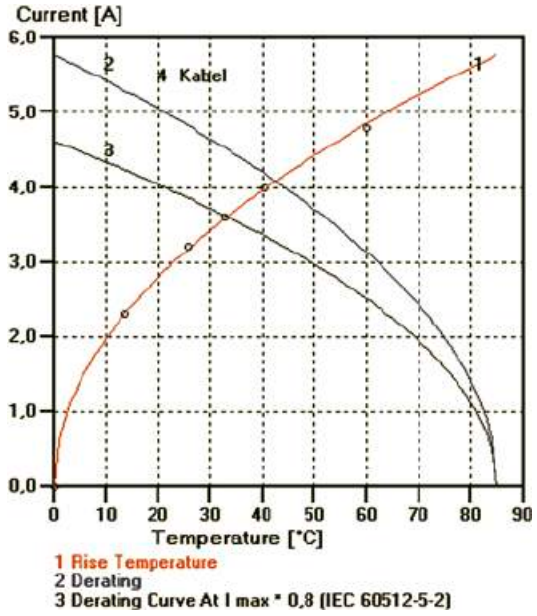

Mating face

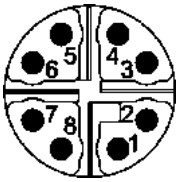

X-coding
Mating face
acc. to IEC 61076-2-109

RoHS

Applications / Advantages

- High-Speed Ethernet applications for process automatization, e.g. camera system for process control in the production
- Maxiumum data rates through the configuration of the contacts in conformance with Ethernet technology. Transfer class E_A for 1 and 10 Gigabit
- Perfect shielding through paired shielding of the contacts
- Overmoulded system cables in various lengths

Identification	Part number	Drawing	Dimensions in mm
har-speed M12 Slim design Male straight version 8 poles, Cat. 6_A Cable diameter: 5.7 - 8.8 mm	21 03 881 1805	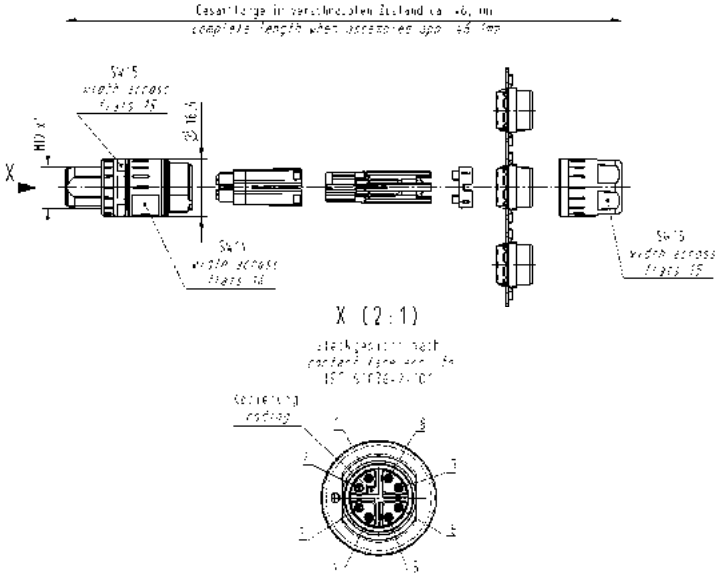	

PROFI INDUSTRIAL ETHERNET NET

Ha-VIS preLink® M12 connector X-coding

Mating face

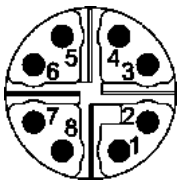

X-coding
Mating face
acc. to IEC 61 076-2-101

Advantages

- M12 Ethernet-Data connector suitable for industry
- Robust design
- 360° shielding
- Category of transmission Cat. 6_A
- Suitable for solid and stranded wires
- Suitable for PoE (IEEE 802.3af) and PoE+ (IEEE 802.3at)

Technical characteristics

Connector type	M12 X-coding acc. to IEC 61 076-2-101
Number of contacts	8
Transmission category	Category 6_A, Class E_A, suitable for 1/10 Gigabit Ethernet
Transmission performance	Category 6_A / Class E_A up to 500 MHz acc. to ISO/IEC 11 801:2002, EN 50 173-1
Transmission rate	10/100 Mbit/s and 1/10 Gbit/s
Shielding	fully shielded, 360° shielding contact
Mounting	IDC termination
Cable termination for preLink® terminal module, yellow, 20 82 000 0001	
Connectable cables	
– Conductor cross section	AWG 23 … AWG 22 (solid and stranded)
– Conductor diameter	1.3 … 1.6 mm
Cable termination for preLink® terminal module, white, 20 82 000 0003	
Connectable cables	
– Conductor cross section	AWG 27 … AWG 26 (solid and stranded)
– Conductor diameter	0.8 … 1.1 mm
Cable diameter	5 … 9 mm
Degree of protection	IP65 / IP67
Mating cycles	min. 750
Temperature range	-40 °C ... +70 °C
Housing material	Zinc die-cast, nickel-plated

Identification	Part number	Drawing	Dimensions in mm
preLink® M12 housing	20 82 000 1210	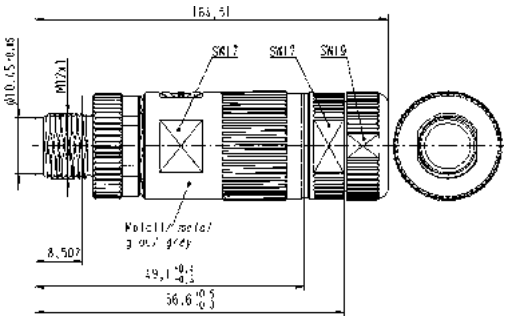	
preLink® M12 male module Male 8 poles, X-coding	20 82 006 1218	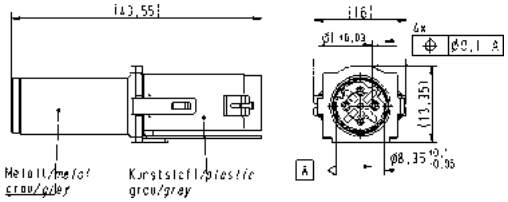	
preLink® M12 connector set X-coding	20 82 005 0002		
Ha-VIS preLink® RJ45 terminal module AWG 22/23, yellow[1)] AWG 26/27, white[1)]	20 82 000 0001 20 82 000 0003		
Ha-VIS preLink® assembly tool	20 82 000 9901		

Further information and data sheets see www.HARTING.com

[1)] Packaging with 10 pieces

har-speed M12 Panel feed-through X-coded

Mating face

X-coding
Mating face
acc. to IEC 61076-2-109

RoHS

Identification	Part number	Drawing	Dimensions in mm
har-speed M12 Adapter M12-RJ45			
 straight, Cat. 6_A Panel thickness min. 2.1 mm max. 4.5 mm	21 03 381 2800	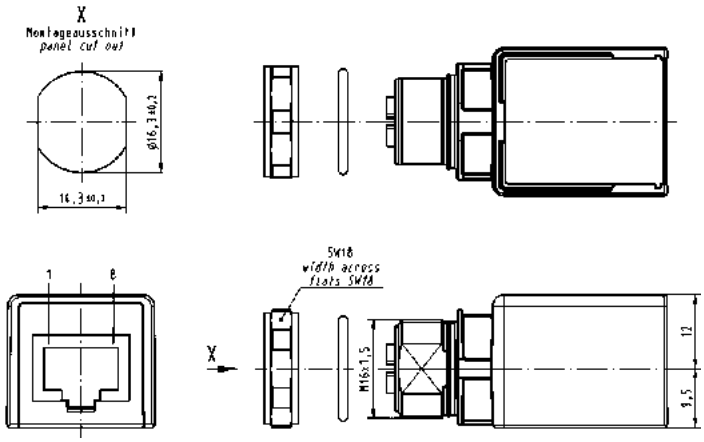	
 angled, Cat. 6_A Panel thickness min. 2.1 mm max. 4.5 mm	21 03 381 4800	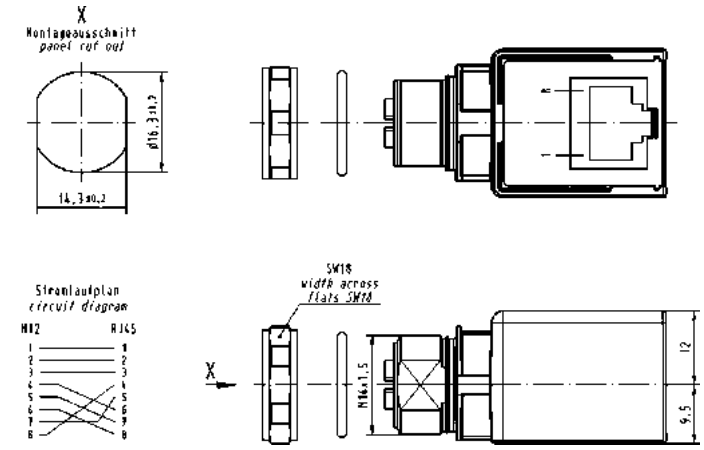	

har-speed M12 Panel feed-through X-coded

Mating face

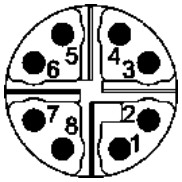

X-coding
Mating face
acc. to IEC 61076-2-109

RoHS

Identification	Part number	Drawing	Dimensions in mm
M12 Gender changer, Cat. 6_A	21 03 381 6815		
M12 Gender changer, Cat. 5 Female-Female 4 poles, D-coding 8 poles, X-coding	21 03 381 6402		
Wall bracket	21 01 000 0036		

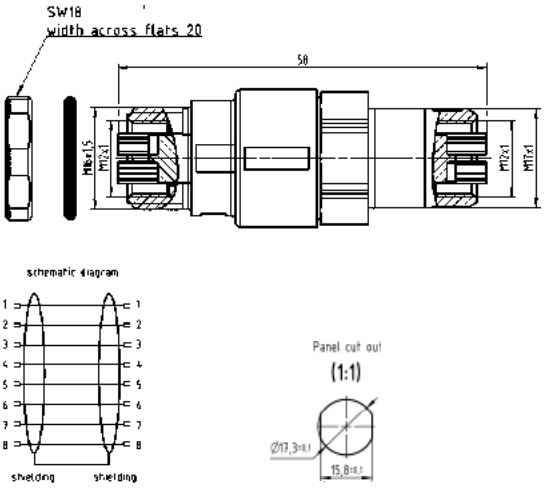

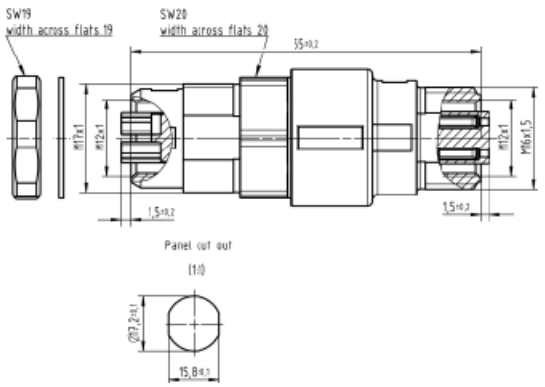

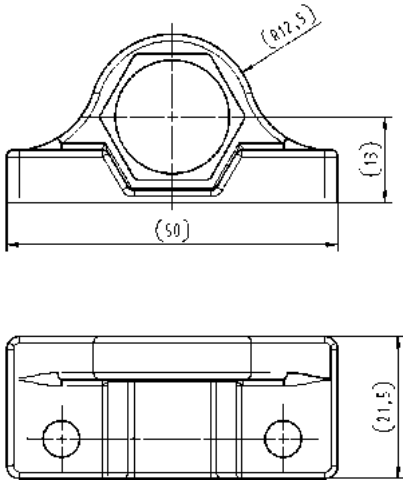

har-speed M12 PCB adapter X-coded

Mating face

X-coding
Mating face
acc. to IEC 61076-2-109

RoHS

Circular Connectors

Identification	Part number	Drawing	Dimensions in mm
***har*-speed M12 PCB adapter** Female, X-coding, straight, Cat. 6_A for front mounting **Packaging: 60 pieces incl. housing** **Packaging: 1 piece incl. housing**	 21 03 381 2802 21 03 381 2813	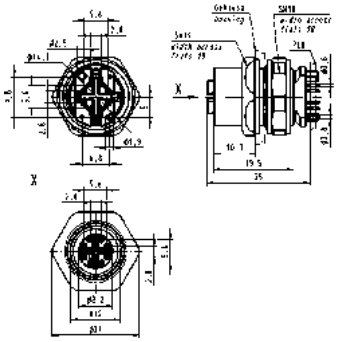	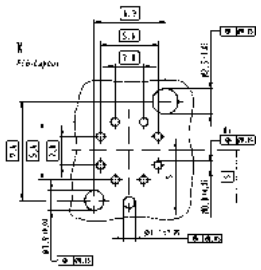
***har*-speed M12 PCB adapter** Female, X-coding, straight, Cat. 5 for front mounting **Packaging: 60 pieces incl. housing** **Packaging: 1 piece incl. housing**	 21 03 381 2803 21 03 381 2814	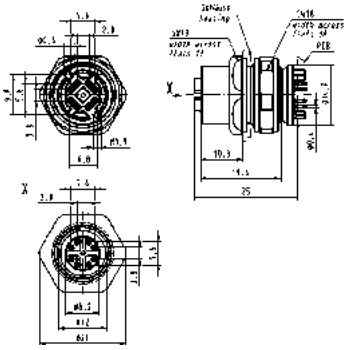	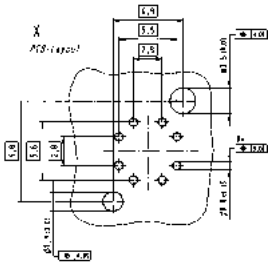
***har*-speed M12 PCB adapter** Female, X-coding, angled, Cat. 6_A for front mounting **Packaging: 30 pieces incl. housing** **Packaging: 1 piece incl. housing**	 21 03 381 4802 21 03 381 4810	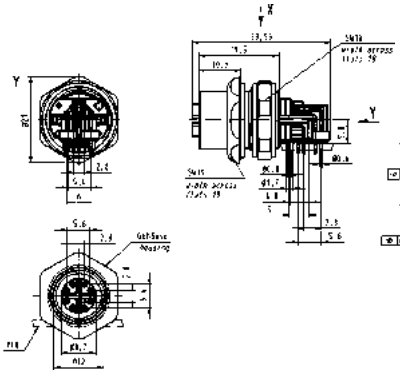	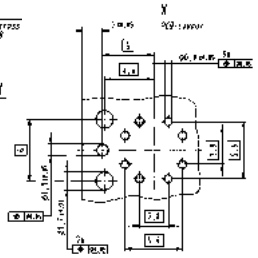

har-speed M12 PCB adapter X-coded

Mating face

X-coding
Mating face
acc. to IEC 61076-2-109

RoHS

Identification	Part number	Drawing	Dimensions in mm
***har*-speed M12 PCB adapter** Female, X-coding, straight, Cat. 6_A for rear mounting		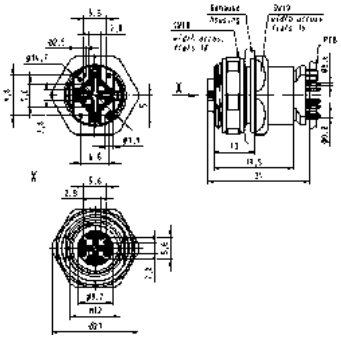	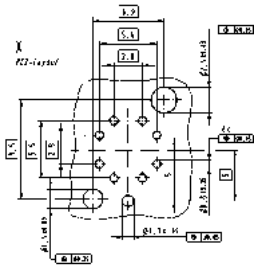
Packaging: 60 pieces incl. housing	21 03 381 2804		
Packaging: 1 piece incl. housing	21 03 381 2811		
***har*-speed M12 PCB adapter** Female, X-coding, straight, Cat. 5 for rear mounting		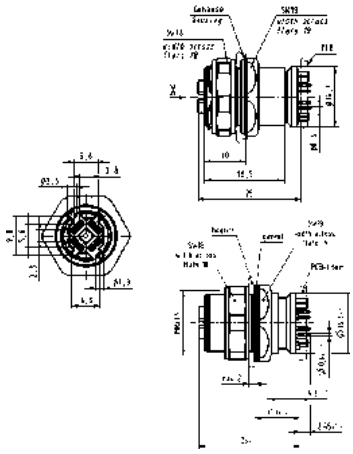	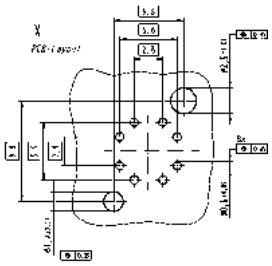
Packaging: 60 pieces incl. housing	21 03 381 2805		
Packaging: 1 piece incl. housing	21 03 381 2812		
Packaging: 60 piece incl. housing	21 03 381 2809		
***har*-speed M12 PCB adapter** Female, X-coding, angled, Cat. 6_A for rear mounting		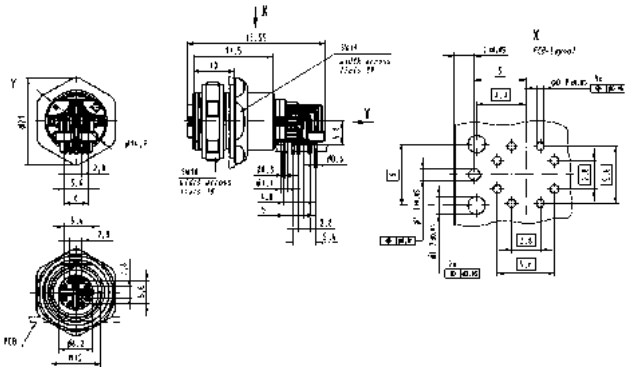	
Packaging: 30 pieces incl. housing	21 03 381 4804		
Packaging: 1 piece incl. housing	21 03 381 4809		

har-speed M12 PCB adapter X-coded

Mating face

X-coding
Mating face
acc. to IEC 61076-2-109

RoHS

Identification	Part number	Drawing	Dimensions in mm
***har*-speed M12 PCB adapter** **Packaging: 60 pieces in a tray** **Order housing separately** Female 8 poles, X-coding Cat. 6_A	21 03 381 2806	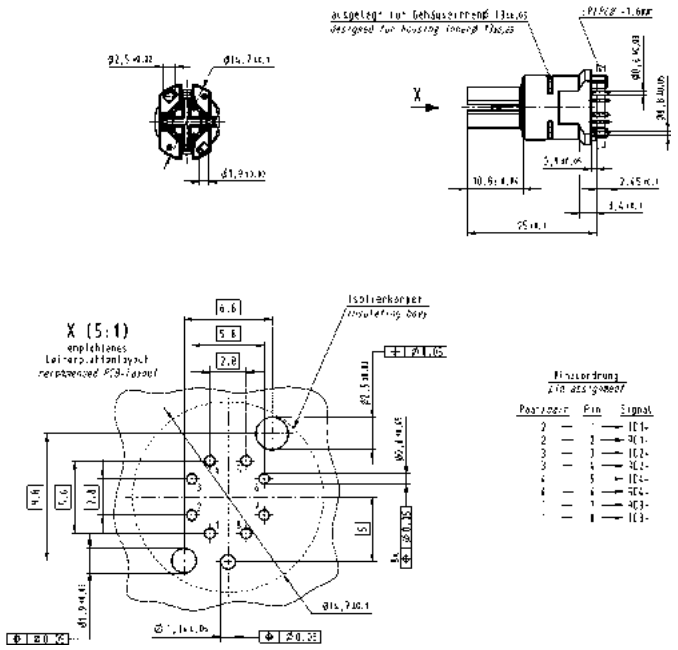	
Female 8 poles, X-coding Cat. 5	21 03 381 2807		
Housing **Packaging: 10 pieces in a tube**		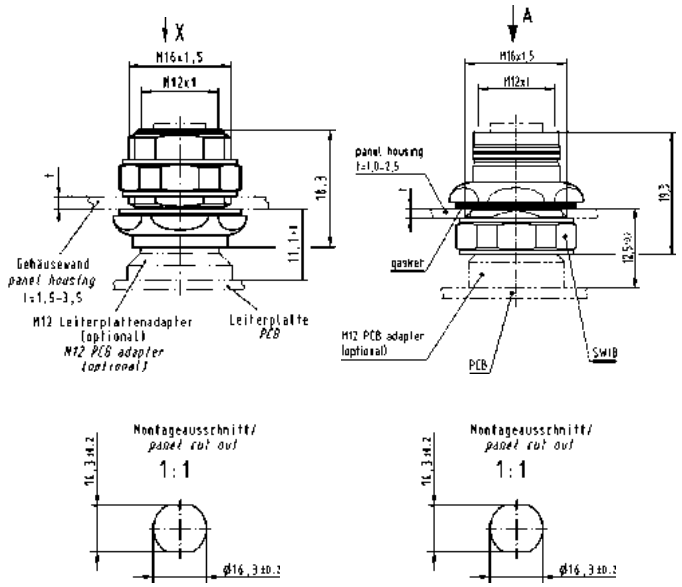	
for rear mounting	21 03 301 2000		
for front mounting	21 03 301 2003		

Identification	Part number	Drawing
Crimping tool for *har*-speed M12	09 99 000 0501	
Accessories *har*-speed M12		
Locator	09 99 000 0525	
Single contacts (500 mating cycles)		
har-speed M12 contacts AWG 28-24 / 0.08-0.22 mm²	21 01 100 9014	
har-speed M12 contacts AWG 26-23 / 0.13-0.25 mm²	21 01 100 9019	
Accessories M12		
Lock nut	21 01 000 0018	
M12 dynamometric screwdriver Tightening torque 0.6 Nm		
for M12 Slim design SW 15	09 99 000 0646	

har-speed contacts

Part number	AWG	Tool settings
21 01 100 9014	28	3
	26	4
	24	5
21 01 100 9019	26	4
	24	5
	23	5

Identification	Part number	Drawing	Dimensions in mm
Cap metal M12 for IP65 / 67 M12 metal cap for male side with cord 	21 01 000 0033	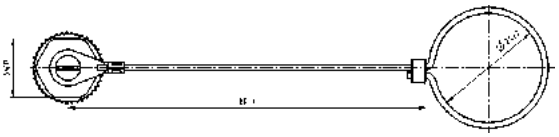	
Cap metal M12 for IP65 / 67 M12 metal cap for male side with cable clip 	21 01 000 0038		
Cap metal M12 for IP65 / 67 M12 metal cap for female side with cord 	21 01 000 0030	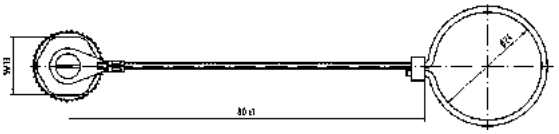	
Cap metal M12 for IP65 / 67 M12 metal cap for female side with cable clip 	21 01 000 0031	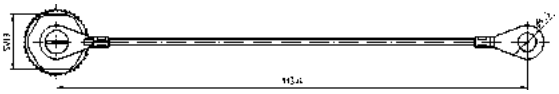	
Cap M12 for IP65 / 67 Seals material Viton Plastic cap for female 	21 01 000 0003	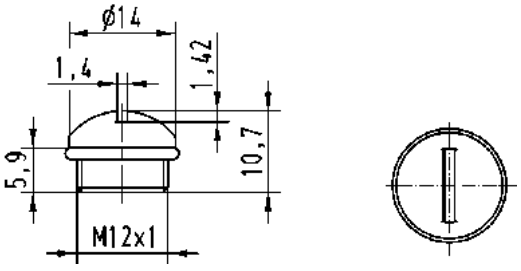	

M12 PushPull Connector

Mating face

D-coding
Mating face
acc. to IEC 61076-2-101

Mating face

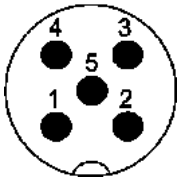

A-coding
Mating face
acc. to IEC 61076-2-101

RoHS

Applications / Advantages

- M12 PushPull for a fast and vibration-free connection
- Simple assembly without tools
- You can hear it click into place
- Suitable for signal and data transmission

Identification	Part number	Drawing	Dimensions in mm
M12 PushPull Slim design Male straight version 4 poles, D-coding, IP54 Cable diameter: 5.7 - 8.8 mm	21 03 881 1430	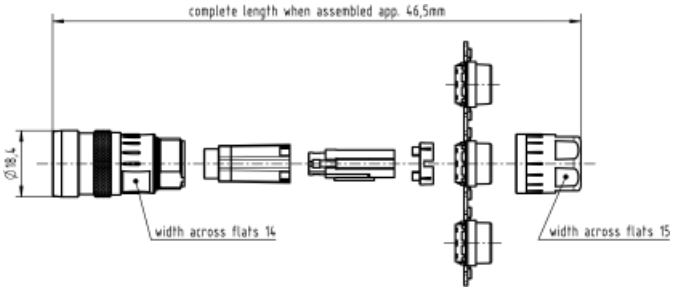	
M12 PushPull Slim design Male straight version 5 poles, A-coding, IP54 Cable diameter: 5.7 - 8.8 mm	21 03 821 1530		

M12 PushPull Connector

Mating face

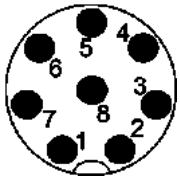

A-coding
Mating face
acc. to IEC 61076-2-101

Mating face

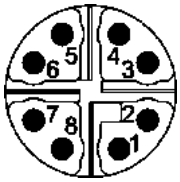

X-coding
Mating face
acc. to IEC 61076-2-119

RoHS

Identification	Part number	Drawing	Dimensions in mm

M12 PushPull Slim design

Male
straight version
8 poles, A-coding, IP54
Cable diameter: 5.7 - 8.8 mm

21 03 821 1830

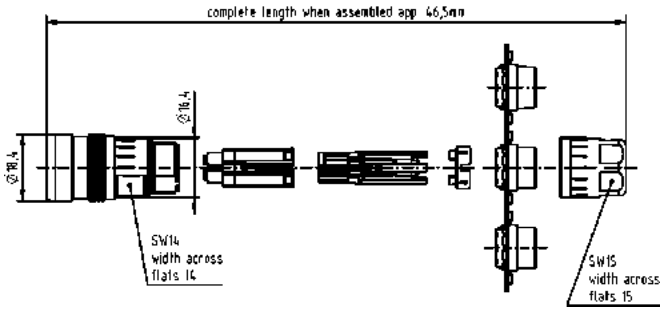

M12 PushPull Slim design

Male
straight version
8 poles, X-coding, IP54
Cable diameter: 5.7 - 8.8 mm

21 03 881 1830

M12 PushPull adapter

21 03 381 2403

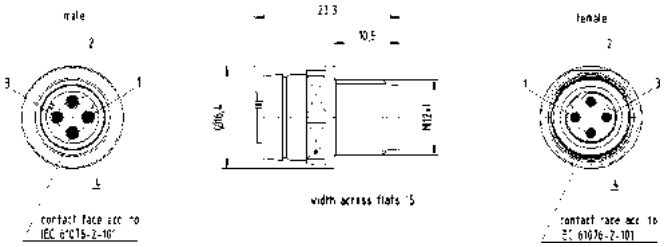

The adapter can be used to bring a PushPull feature on a standard receptacle housing without PushPull feature.

Further information and data sheets see www.HARTING.com

M12 PushPull PCB connector

Mating face

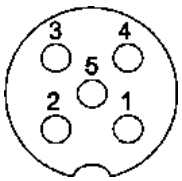

A-coding
Mating face
acc. to IEC 61076-2-101

Identification	Part number	Drawing	Dimensions in mm
M12 PCB adapter, shielded **Packaging: 60 pieces in a tray** **Order housing separately**		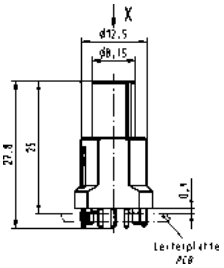 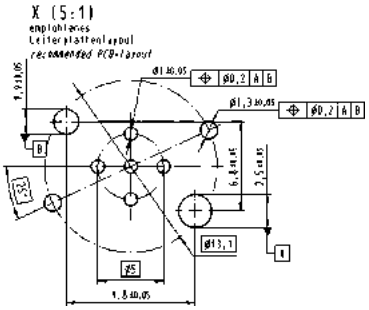	
Female 5 poles, A-coding	21 03 321 2518*		
8 poles, A-coding	21 03 321 2818*		
Housing for PushPull locking 		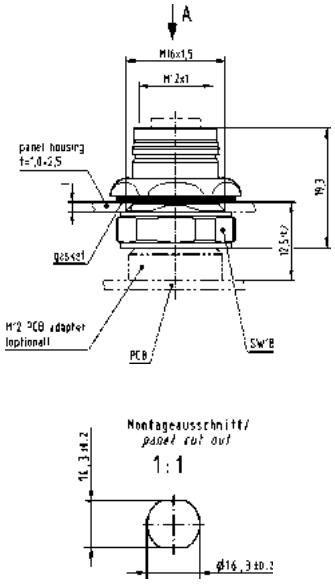	
for front mounting	21 03 301 2003		

Further information and data sheets see www.HARTING.com
* UL approval is in preparation

M12 PushPull PCB connector

Mating face

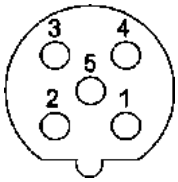

B-coding
Mating face
acc. to IEC 61076-2-101

Identification	Part number	Drawing	Dimensions in mm
M12 PCB adapter, shielded **Packaging: 60 pieces in a tray** **Order housing separately** Female 5 poles, B-coding	21 03 341 2518*	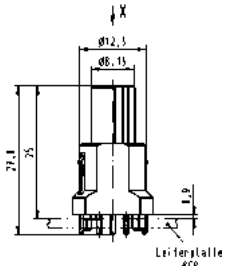 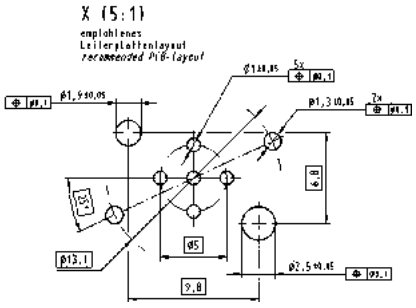	
Housing for PushPull locking for front mounting	21 03 301 2003	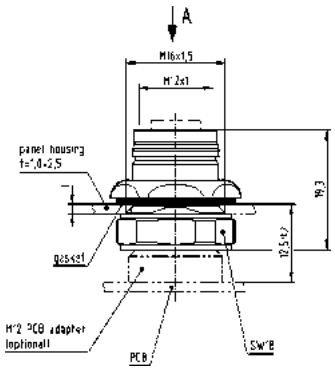 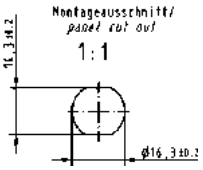	

Further information and data sheets see www.HARTING.com
* UL approval is in preparation

M12 PushPull PCB connector

Mating face

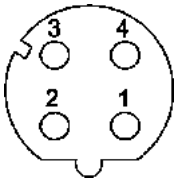

D-coding
Mating face
acc. to IEC 61076-2-101

Identification	Part number	Drawing	Dimensions in mm
M12 PCB adapter, shielded **Packaging: 60 pieces in a tray** **Order housing separately** Female 4 poles, D-coding	21 03 381 2418*	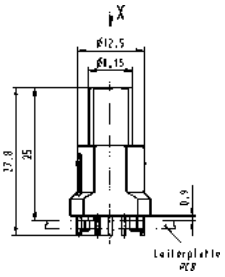 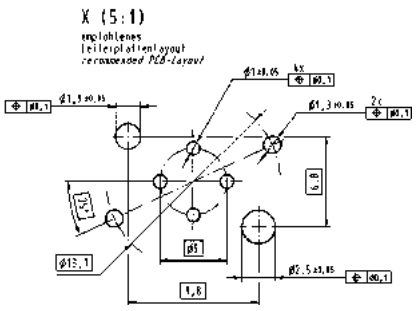	
Housing for PushPull locking for front mounting	21 03 301 2003	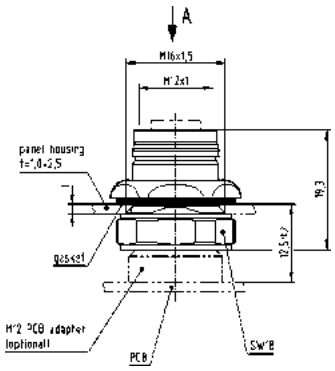 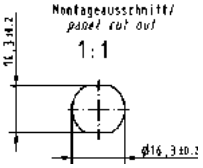	

Further information and data sheets see www.HARTING.com
* UL approval is in preparation

M12 PushPull PCB connector

Mating face

X-coding
Mating face
acc. to IEC 61 076-2-101

RoHS

Identification	Part number	Drawing	Dimensions in mm
har-speed M12 PCB adapter **Packaging: 60 pieces in a tray** **Order housing separately**		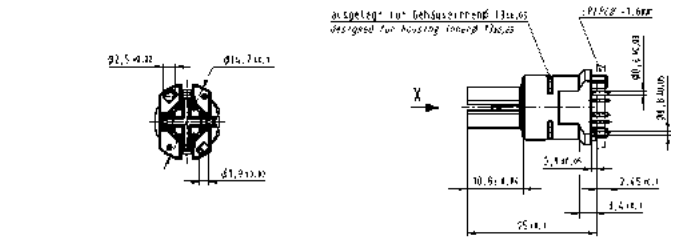 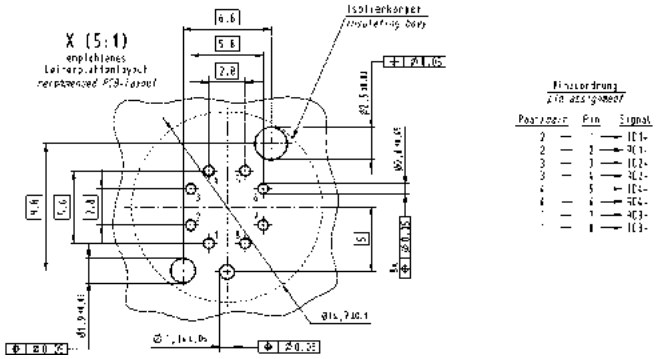	
Female 8 poles, X-coding Cat. 6_A	21 03 381 2806		
Female 8 poles, X-coding Cat. 5	21 03 381 2807		
Housing for PushPull locking 		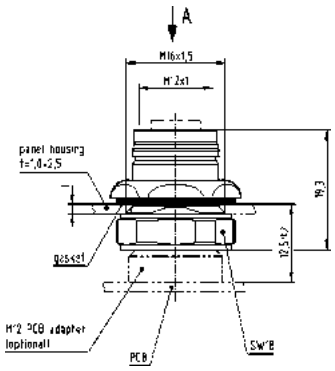 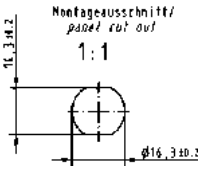	
for front mounting	21 03 301 2003		

Identification	Part number	Drawing
Crimping tool for M12 PushPull	09 99 000 0501	

Accessories M12 PushPull

Locator

for D-Sub contacts	09 99 000 0531
for contact 21 01 100 9020	61 03 600 0023
for *har*-speed contacts	09 99 000 0525

D-Sub contacts

Part number	AWG	Tool settings
09 67 000 3x76	18	6
	20	6
	22	5
09 67 000 8x76	20, 22, 24	6
09 67 000 5x76	22, 24, 26	6

har-speed contacts

Part number	AWG	Tool settings
21 01 100 9014	28	3
	26	4
	24	5
21 01 100 9019	26	4
	24	5
	23	5

D-Sub single contacts (500 mating cycles)

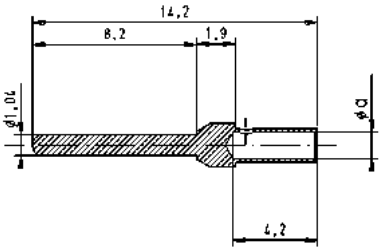

	a
AWG 22 - 18	1.34
AWG 24 - 20	1.13
AWG 26 - 22	0.88

turned male contacts	
AWG 22 - 18 / 0.33 - 0.82 mm²	09 67 000 3576
AWG 24 - 20 / 0.25 - 0.52 mm²	09 67 000 8576
AWG 26 - 22 / 0.13 - 0.33 mm²	09 67 000 5576
AWG 28 - 24 / 0.09 - 0.25 mm²	09 67 000 7576

turned male contact for 8 pole connector, A-coding, AWG 26 - 22	21 01 100 9020

Single contacts (500 mating cycles)

har-speed M12 contacts AWG 28-24 / 0.08-0.22 mm²	21 01 100 9014

har-speed M12 contacts AWG 26-23 / 0.13-0.25 mm²	21 01 100 9019

Identification	Part number	Drawing
M12 dynamometric screwdriver Tightening torque 0.6 Nm for M12 Slim design SW 15	09 99 000 0646	

Identification	Part number	Drawing	Dimensions in mm
Cap metal M12 for IP65 / IP67 M12 metal cap for female side with cord 	21 01 000 0030	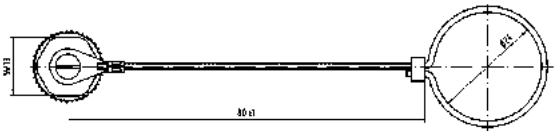	
Cap metal M12 for IP65 / IP67 M12 metal cap for female side with cable clip 	21 01 000 0031	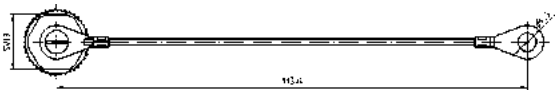	
Cap M12 for IP65 / IP67 Seals material Viton Plastic cap for female 	21 01 000 0003	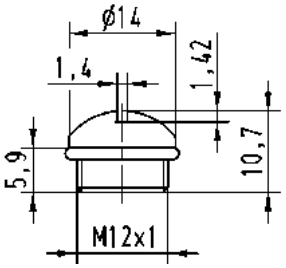 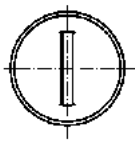	

Notes

Specifications IEC 60 352-4
IEC 60 068-2-52:1996, severity level 4

RoHS

Technical characteristics M12 INOX

Type M12 INOX V4A	***HARAX*® M12-L** **4 poles**	**M12 Crimp**

General data

Conductor cross section	0.34 - 0.75 mm² AWG 22 - 18	0.14 - 0.75 mm² AWG 26 - 18
Diameter of individual strands	≥ 0.1 mm	X
Conductor insulation material	PVC	X
Conductor diameter	1.6 - 2.0 mm 2.0 - 2.6 mm	2.0 - 2.3 mm
Cable diameter	6 - 8 mm	4.5 - 8.8 mm
Temperature range	-40 °C … +85 °C	-40 °C … +85 °C
Temperature during connection	-5 °C … +50 °C	-5 °C … +50 °C
Degree of protection	IP65 / 67	IP65 / IP66 / IP67
Mating cycles	100	500
Tightening torque connector / hexagonal wrench	0.6 Nm / SW 17	0.6 Nm / SW 17

Electrical characteristics

Rated current	6 A	4 A
Rated voltage	50 V	250 V
Rated impulse voltage	1.5 kV	1.5 kV
Contact resistance	10 mΩ	10 mΩ
Insulation resistance	10^8 Ω	10^8 Ω
Pollution degree	3	3
Overvoltage category	3	3
Isolation group	1	1

Materials

Contact material	Brass	Brass
Contact plating	Gold	Gold
Contact carrier material	PA unreinforced	PA
Housing material	V4A	V4A

Technical characteristics M12 INOX

Current carrying capacity

The current carrying capacity is limited by maximum temperature of materials for inserts and contacts including terminals. The current capacity-curve is valid for continuous, not interruptet current-loaded contacts of connectors when simultaneous power on all contacts is given, without exceeding the maximum temperature.

Control and test procedures according to DIN IEC 60 512-5.

M12-L
4 poles

1 = Wire gauge 0.34 mm²
2 = Wire gauge 0.75 mm²

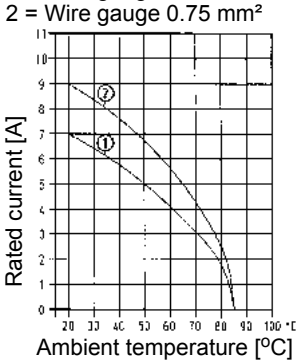

M12, Crimp

1 = Wire gauge 0.34 mm² / 0.5 mm²

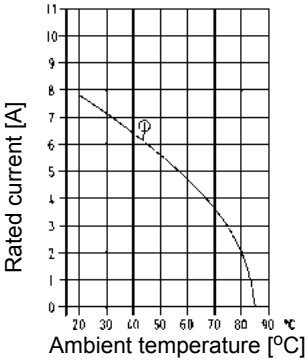

Mating face

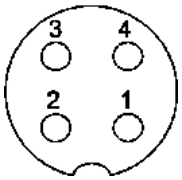

A-coding
Mating face
acc. to IEC 61076-2-101

RoHS

Applications / Advantages

- Designed for rough outdoor applications in harsh environments
- Material V4A
- Available with crimp resp. *HARAX*® rapid termination
- Extreme robust design, quick assembly

Identification	Part number	Drawing	Dimensions in mm
HARAX® M12-L INOX Female, A-coding, straight version 4 poles	21 03 222 2435	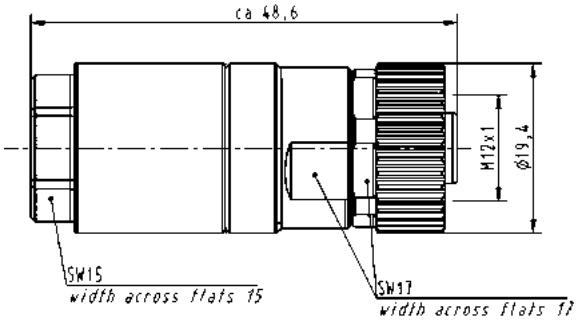	

M12 INOX

Mating face

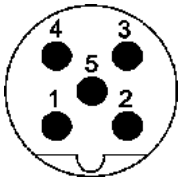

B-coding

D-coding

Mating faces acc. to IEC 61076-2-101

RoHS

Identification	Part number	Drawing	Dimensions in mm
M12-L Crimp INOX			
Male, B-coding, straight version 5 poles	21 03 841 1535	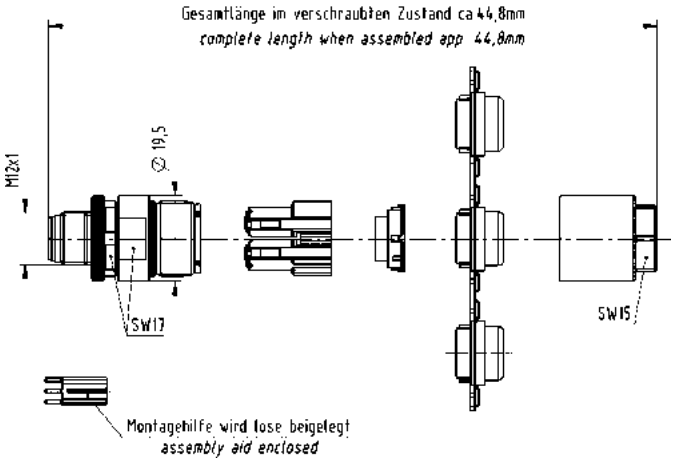	
Male, D-coding, straight version 4 poles	21 03 882 1435	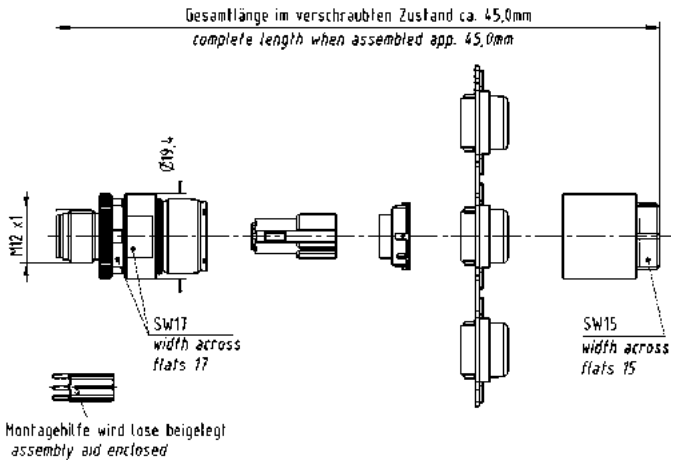	

M12 with conduit

Mating face

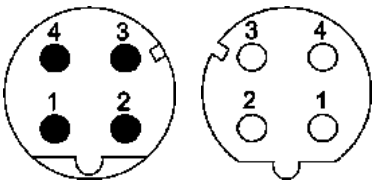

D-coding
Mating face
acc. to IEC 61076-2-101

RoHS

Applications / Advantages

- M12 connector with the option to connect a plastic tube to protect the cable assembly in rough applications
- Robust design for IP65 / IP67 environments
- A- and D-coding available with crimp termination
- 360° shielding

Identification	Part number	Drawing	Dimensions in mm
M12 connector with PMA connection for PVC tube NW10 Male 4 poles, D-coding	21 03 882 1411	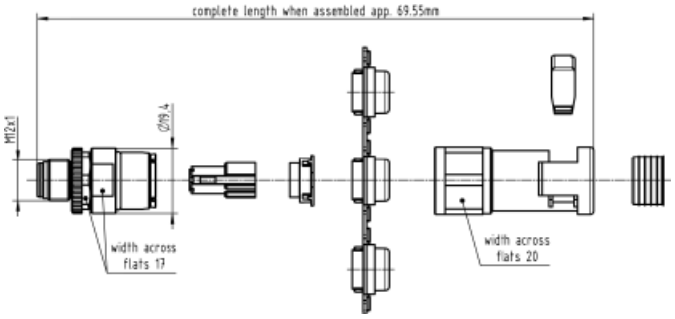	
M12 connector with PMA connection for PVC tube NW10 Female 4 poles, D-coding	21 03 882 2411	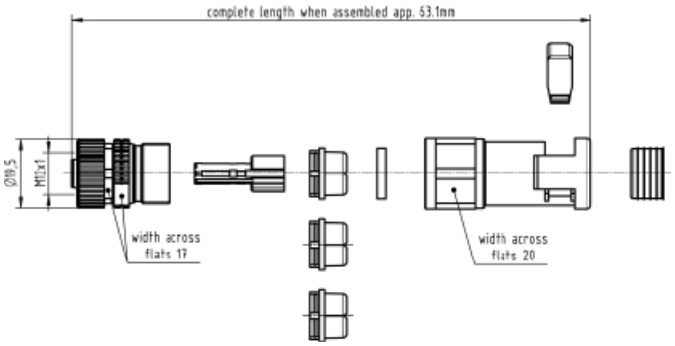	

We recommend to use the PMA tube PCST-10B.50 that is available at the PMA company.

M12 with conduit

Mating face

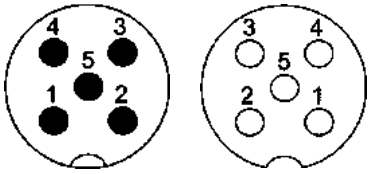

A-coding
Mating face
acc. to IEC 61076-2-101

RoHS

Circular Connectors

Identification	Part number	Drawing	Dimensions in mm
M12 connector with PMA connection for PVC tube NW10 Male 5 poles, A-coding	21 03 812 1511	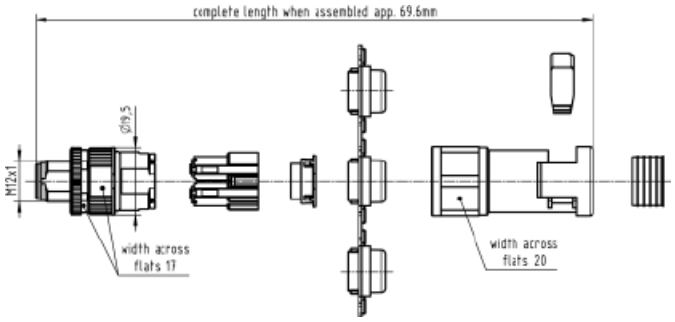	
M12 connector with PMA connection for PVC tube NW10 Female 5 poles, A-coding	21 03 812 2511	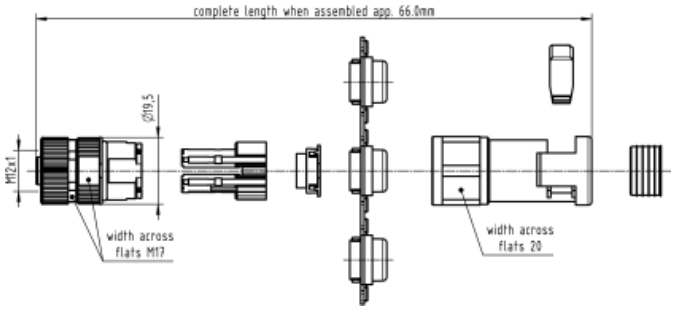	

We recommend to use the PMA tube PCST-10B.50 that is available at the PMA company.

Specifications IEC 60 352-4
DIN 61 984

Approval , VDE

Mating face

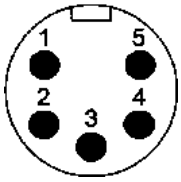

Technical characteristics 7/8“ *HARAX*®

Type	7/8“ *HARAX*®

General data

Conductor cross section	0.75 - 1.5 mm² AWG 18-16
Diameter of individual strands	≥ 0.15 mm
Conductor insulation material	PVC, PP, TPE
Conductor diameter	≤ 2.8 mm
Cable diameter	6.8 - 9.5 mm (black) 9 - 12.5 mm (grey)
Temperature range	-40 °C … +85 °C
Temperature during connection	-5 °C … +50 °C
Degree of protection	IP65 / IP67
Mating cycles	100
Recommended tightening torque / Hexagonal wrench	1.5 Nm / SW 22

Electrical characteristics

Rated current	10 A
Rated voltage	230 V / 400 V
Rated impulse voltage	4.8 kV
Contact resistance	10 mΩ
Insulation resistance	10^8 Ω
Pollution degree	3
Overvoltage category	3
Isolation group	1

Materials

Contact material	Copper alloy
Contact plating	Gold
Contact carrier material	TPU, PA
Housing material	TPU, zinc die-cast, PA

Technical characteristics 7/8“ *HARAX*®

Current carrying capacity

The current carrying capacity is limited by maximum temperature of materials for inserts and contacts including terminals. The current capacity-curve is valid for continuous, not interruptet current-loaded contacts of connectors when simultaneous power on all contacts is given, without exceeding the maximum temperature.

Control and test procedures according to DIN IEC 60 512-5.

7/8“

1 = Wire gauge 0.75 mm² / 1.5 mm²

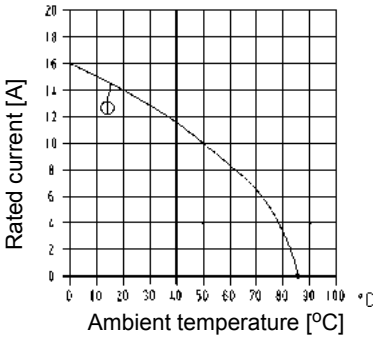

Mating face

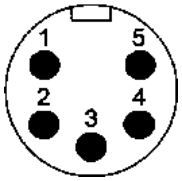

Applications / Advantages

- The reliable connector for power applications
- Patent *HARAX*® fast termination
- Overmoulded system cables in various lengths
- Robust design, quick assembly

Identification	Part number	Drawing	Dimensions in mm
7/8“ *HARAX*® Male	21 04 116 1505	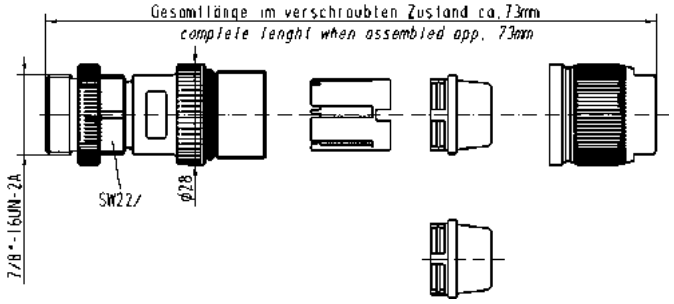	

Mating face

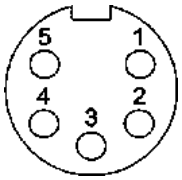

Identification	Part number	Drawing	Dimensions in mm
7/8“ *HARAX*® Female	21 04 116 2505	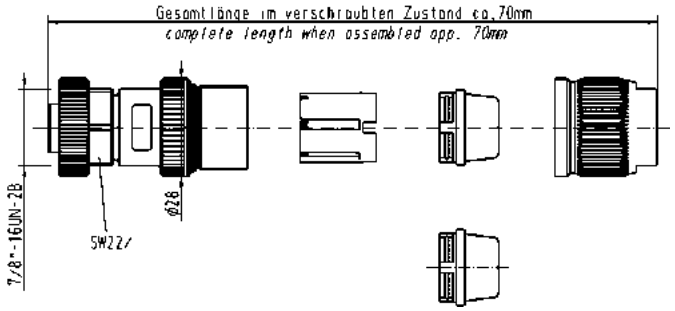	

7/8" System cables

Male, 2 + PE

Male, 4 poles

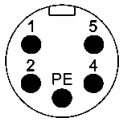

Male, 4 + PE

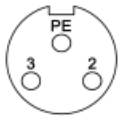

Female, 2 + PE

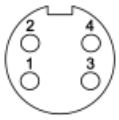

Female, 4 poles

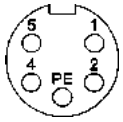

Female, 4 + PE

Technical characteristics

7/8“ system cables

	3 poles (2+PE)		4 poles		5 poles (4+PE)	
	PVC	PUR	PVC	PUR	PVC	PUR
Rated voltage	max. 300 V AC/DC	max. 300 V AC/DC	max. 300 V AC/DC	max. 300 V AC/DC	max. 300 V AC/DC	max. 300 V AC/DC
Rated currrent / contact	max. 10 A at +40 °C	max. 10 A at +40 °C	max. 10 A at +40 °C	max. 10 A at +40 °C	max. 10 A at +40 °C	max. 10 A at +40 °C
Screw locking	7/8", self securing	7/8", self securing	7/8", self securing	7/8", self securing	7/8", self securing	7/8", self securing
Temperature range (working and storage)	-30 °C … +80 °C	-30 °C … +80 °C	-30 °C … +80 °C	-30 °C … +80 °C	-30 °C … +80 °C	-30 °C … +80 °C
Degree of protection	IP67	IP67	IP67	IP67	IP67	IP67
Number of wires / wire gauge	3 x 1.5 mm²	3 x 1.5 mm²	4 x 1.5 mm²	4 x 1.5 mm²	5 x 1.5 mm²	5 x 1.5 mm²
Conductor insulation	PVC (bn, bu, gn/ye)	PP (bn, bu, gn/ye)	PVC (bn, wh, bu, bk)	PP (bn, wh, bu, bk)	PVC (bu, bk, wh, bn, gn/ye)	PP (bu, bk, wh, bn, gn/ye)
Arrangement of insulated strands	84 x Ø 0.15 mm	84 x Ø 0.15 mm	84 x Ø 0.15 mm	84 x Ø 0.15 mm	84 x Ø 0.15 mm	84 x Ø 0.15 mm
Sheath	PVC	PUR (UL, CSA)	PVC	PUR (UL, CSA)	PVC	PUR (UL, CSA)
Sheath colour	grey	black	grey	black	grey	black
Outer diameter	Ø 7.0 ± 0.2 mm	Ø 7.0 ± 0.2 mm	Ø 7.8 ± 0.2 mm	Ø 7.1 ± 0.2 mm	Ø 8.5 ± 0.2 mm	Ø 7.8 ± 0.2 mm
Useable as trailing cable	no	yes	no	yes	no	yes
Halogen free acc. to	–	DIN VDE 0472 part 815	–	DIN VDE 0472 part 815	–	DIN VDE 0472 part 815
Flame retardant acc. to	DIN EN 60332-1-2	DIN EN 60332-1-2	DIN EN 60332-1-2	cUL20549	DIN EN 60332-1-2	cUL20549
Oil-resistant	IEC 60811-2-1	DIN EN 60811-2-1	–	–	–	–
	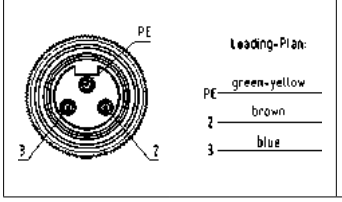		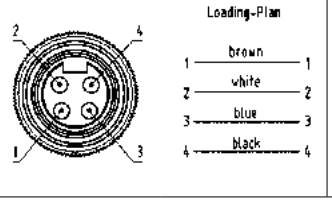		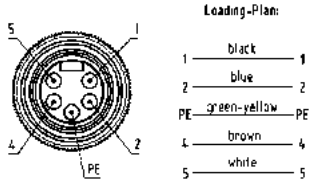	

7/8" System cables

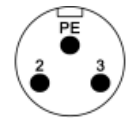

Male, 2 + PE

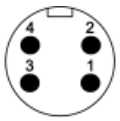

Male, 4 poles

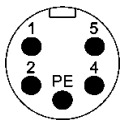

Male, 4 + PE

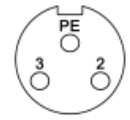

Female, 2 + PE

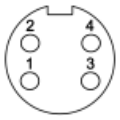

Female, 4 poles

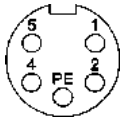

Female, 4 + PE

Part number definition

2	1	3	4	X	X	X	X	X	X	X	X	X	X	X

Connector 1
96 Male straight
97 Female straight
98 Male angled
99 Female angled

Connector 2
00 No connector
96 Male straight
97 Female straight
98 Male angled
99 Female angled

Number of contacts
3 2 + PE
4 4 poles
5 4 + PE

Cable material
93 PVC (2 + PE)
94 PUR (2 + PE)
95 PVC (4 poles)
96 PUR (4 poles)
97 PVC (4 + PE)
98 PUR (4 + PE)

Preferred length*
005 0.5 m
010 1.0 m
015 1.5 m
020 2.0 m
050 5.0 m
075 7.5 m
100 10.0 m

* Other length on request

7/8“ Panel feed-through

Mating face

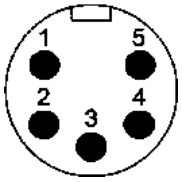

Identification	Part number	Drawing	Dimensions in mm
7/8“ Panel feed-through 20 cm conductors, AWG 18, 1 mm², 3 poles			
Male	21 04 316 1305	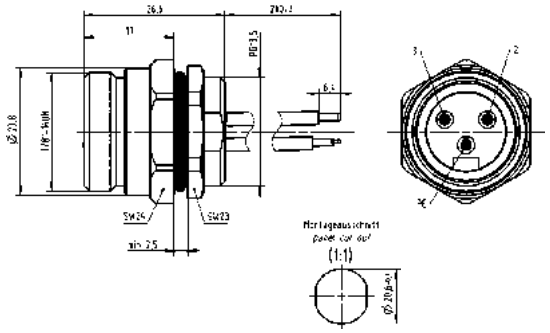	
Female	21 04 316 2301	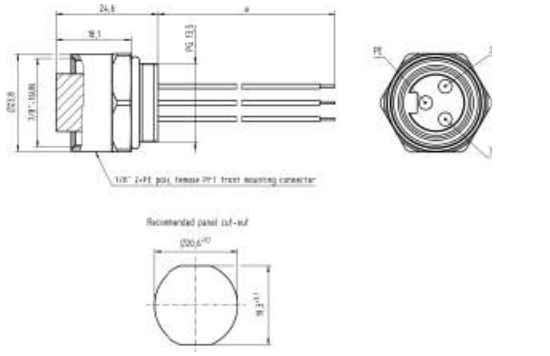	
7/8“ Panel feed-through 50 cm conductors, AWG 18, 1 mm², 4 poles			
Female	21 04 316 2401	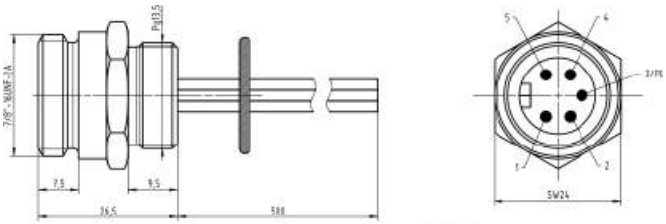	
7/8“ Panel feed-through 50 cm conductors, AWG 18, 1 mm², 5 poles			
Male	21 04 316 1505	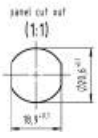	
Female	21 04 316 2501	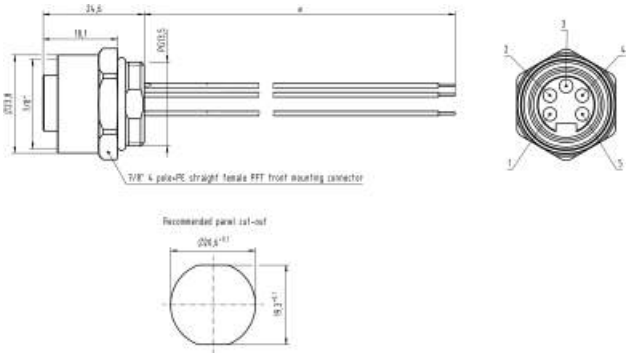	

7/8“ Panel feed-through

Mating face

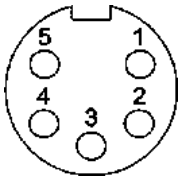

Identification	Part number	Drawing	Dimensions in mm
7/8“ Panel feed-through 20 cm conductors, AWG 18, 1 mm², 4 poles Female	21 04 316 2400	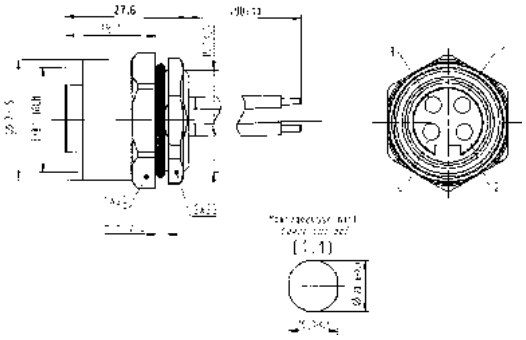	
7/8“ Panel feed-through 50 cm conductors, AWG 18, 1 mm², 5 poles Female	21 04 316 2505	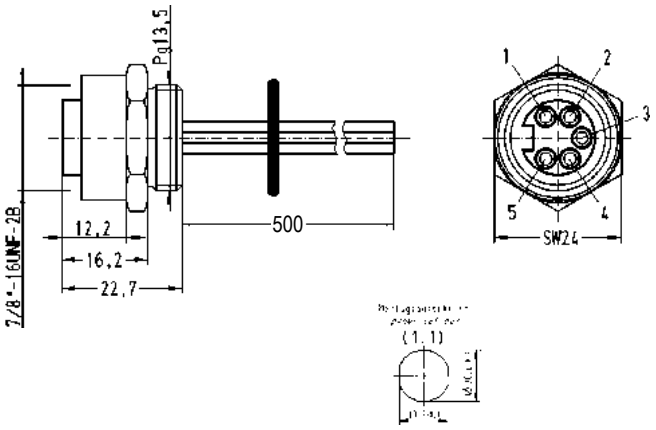	

Identification	Part number	Drawing	Dimensions in mm
Lock nut Pg 13.5 nickel plated	21 01 000 0020	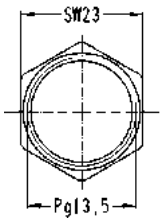 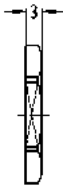	
7/8“ dynamometric screwdriver Tightening torque 1.5 Nm for 7/8“ SW 23	09 99 000 0395		

Notes

HARAX® Panel feed-through

Specifications IEC 60 352-4
DIN 61 984

Approval , VDE

Technical characteristics Panel feed-through

Type	***HARAX*® Pg 13.5/M20 Panel feed-through**

General data

Conductor cross section	0.75 - 1.5 mm² AWG 18 - 16
Diameter of individual strands	≥ 0.2 mm
Conductor insulation material	PVC, PP, TPE
Conductor diameter	≤ 2.8 mm
Cable diameter	6 - 9 mm
Temperature range	-25 °C … +85 °C
Temperature during connection	-5 °C … +50 °C
Degree of protection	IP67
Mating cycles	100
Recommended tightening torque	8 Nm

Electrical characteristics

Rated current	16 A
Rated voltage	230 V / 400 V
Rated impulse voltage	4 KV
Contact resistance	10 mΩ
Insulation resistance	10^8 Ω
Pollution degree	3
Overvoltage category	3
Isolation group	1

Materials

Contact material	Copper alloy
Contact plating	Gold
Contact carrier material	TPU, PA
Housing material	TPU, PA

Technical characteristics Panel feed-through

Current carrying capacity

The current carrying capacity is limited by maximum temperature of materials for inserts and contacts including terminals. The current capacity-curve is valid for continuous, not interruptet current-loaded contacts of connectors when simultaneous power on all contacts is given, without exceeding the maximum temperature.

Control and test procedures according to DIN IEC 60 512-5.

Pg 13.5
3 poles

1 = Wire gauge
0.75 mm²

2 = Wire gauge
1.5 mm²

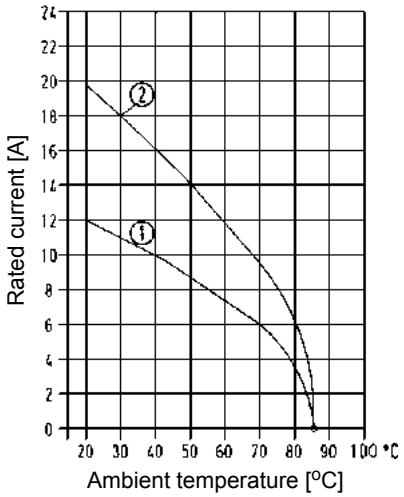

Pg 13.5 / M20
4 poles

1 = Wire gauge
0.75 mm²

2 = Wire gauge
1.5 mm²

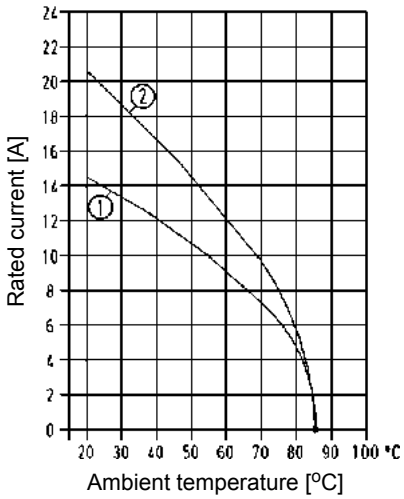

HARAX® Pg 13.5 / M20 Panel feed-through

Identification	Part number	Drawing	Dimensions in mm
HARAX® Pg 13.5 / 3 contacts with faston blades	21 01 130 1013	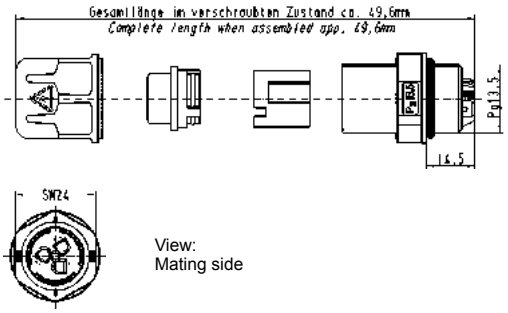	
HARAX® Pg 13.5 / 3 contacts with solder termination	21 01 130 1023		
HARAX® Pg 13.5 / 3 contacts with pre-assembled pigtail cable, l = 500 mm, 1.5 mm²	21 01 130 1223		
HARAX® Pg 13.5 / 2 + PE with faston blades	21 01 130 3013	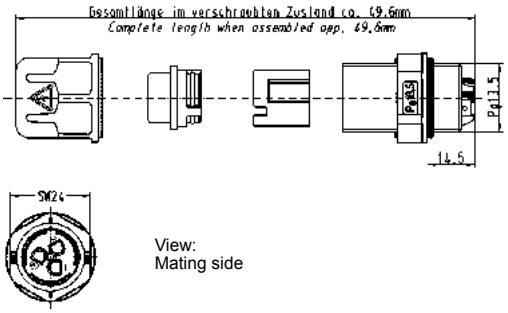	
HARAX® Pg 13.5 / 2 + PE with solder termination	21 01 130 3023		
HARAX® Pg 13.5 / 2 + PE with pre-assembled pigtail cable, l = 500 mm, 1.5 mm²	21 01 130 3233		
HARAX® Pg 13.5 / 4 contacts with solder termination	21 01 140 1023	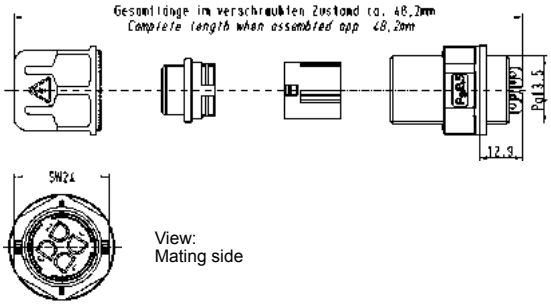	
HARAX® Pg 13.5 / 3 + PE with solder termination	21 01 140 3023		
HARAX® Pg 13.5 / 4 contacts with pre-assembled pigtail cable, l = 500 mm, 1.5 mm²	21 01 140 1323		
HARAX® Pg 13.5 / 3 + PE with pre-assembled pigtail cable, l = 500 mm, 1.5 mm²	21 01 140 3333		
HARAX® M20 / 4 contacts with solder termination	21 01 141 1023	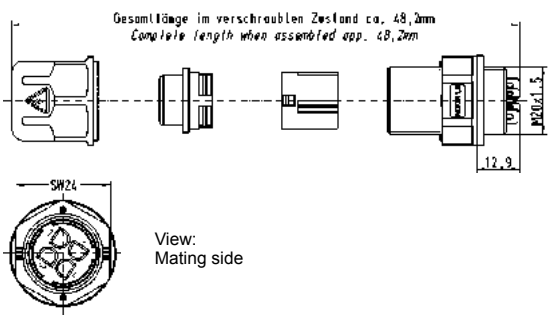	
HARAX® M20 / 3 + PE with solder termination	21 01 141 3023		
HARAX® M20 / 4 contacts with pre-assembled pigtail cable, l = 500 mm, 1.5 mm²	21 01 141 1323		
HARAX® M20 / 3 + PE with pre-assembled pigtail cable, l = 500 mm, 1.5 mm²	21 01 141 3333		

Further information and data sheets see www.HARTING.com

Identification	Part number	Drawing	Dimensions in mm
Termination element M12 *HARAX*® Pg 9 — 3 contacts Screw cap, splice ring, seal	21 01 010 0001	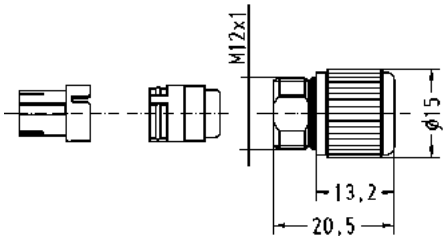	
Termination element M12 *HARAX*® Pg 9 — 4 contacts Screw cap, splice ring, seal	21 01 010 0006	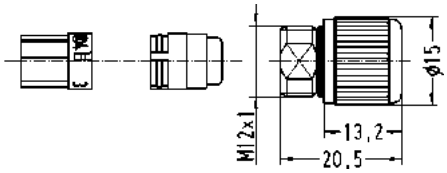	
Lock nut Pg 9	21 01 000 0008		
Lock nut Pg 13.5, SW 27	21 01 000 0007		
Lock nut Pg 13.5, SW 24	21 01 000 0039		

Notes

Advantages

- IP65 / IP67 RJ45 connector with toggle locking acc. to IEC 61 076-3-106 variant 1
- Robust zinc die cast housing, nickel plated
- Vibration and shock resistant
- Min. 500 mating cycles
- Shielded and unshielded versions
- Suitable for PoE (IEEE 802.3af) and PoE+ (IEEE 802.3at)
- ODVA approval

Technical characteristics device side

	Han-Max®
Connector type	RJ45 acc. to IEC 60 603-7
Number of contacts	8
Transmission performance	Category 5 / class D up to 100 MHz acc. to ISO/IEC 11801:2002; EN 50173-1
Transmission rate	10/100/1.000 Mbit/s
Shielding	unshielded / shielded
Mounting	field-assembly
Termination	with IDC contacts
Connectable cables	
- Conductor cross section	AWG 22 ... AWG 24 solid / stranded
Temperature range	-25 °C … +70 °C

Technical characteristics cable side

	Han-Max®	**Han-Max® RJ Industrial**	**Han-Max® RJ Industrial 10G**
Connector type	RJ45 acc. to IEC 60 603-7	RJ45 acc. to IEC 60 603-7	RJ45 acc. to IEC 60 603-7
Number of contacts	8	4	8
Transmission performance	Category 5 / class D up to 100 MHz acc. to ISO/IEC 11801:2002; EN 50173-1	Category 5 / class D up to 100 MHz acc. to ISO/IEC 11801:2002; EN 50173-1	Category 6 / class E_A up to 250 MHz acc. to ISO/IEC 11801:2002; EN 50173-1
Transmission rate	10/100/1.000 Mbit/s	10/100 Mbit/s	10/100 Mbit/s resp. 1/10 Gbit/s
Shielding	unshielded / shielded	fully shielded, 360° shielding contact	fully shielded, 360° shielding contact
Mounting	field-assembly	no tools needed, field-assembly	no tools needed, field-assembly
Termination	with piercing contacts	with IDC contacts	with IDC contacts
Connectable cables			
- Conductor cross section	AWG 26/7 ... AWG 24/7 stranded	AWG 24/7 ... AWG 22/7 stranded AWG 23/1 ... AWG 22/1 solid	AWG 27/7 ... AWG 22/7 stranded AWG 24/1 ... AWG 22/1 solid
- Conductor diameter	max. 1.0 mm (including insulation)	max. 1.6 mm (including insulation)	max. 1.6 mm (including insulation)
- Cable diameter	4 ... 8 mm	4 ... 8 mm	4 ... 8 mm
Temperature range	-25 °C ... +70 °C	-40 °C ... +70 °C	-40 °C ... +70 °C

Device side

Identification	Part number	Drawing	Dimensions in mm
Han-Max® RJ45 panel feed-through unshielded version (UTP) 	09 15 300 0301	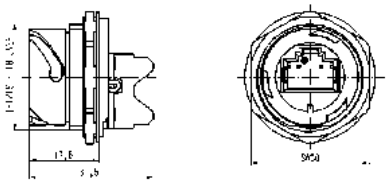	Panel cut out for max. Panel thickness 2.3 mm 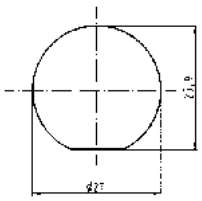
Han-Max® MS RJ45 panel feed-through unshielded version (UTP) 	09 15 300 0311	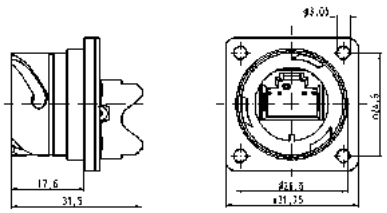	panel feed through 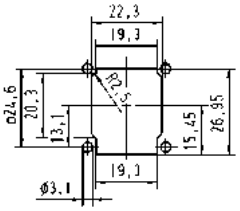
Han-Max® Protection cover Device side 	09 15 300 5411	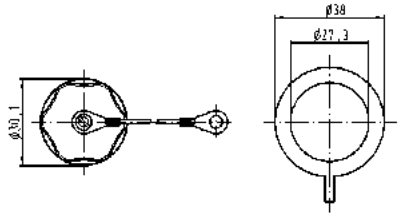	

Cable side

Identification	Part number	Drawing	Dimensions in mm
Han-Max® Connector Cat. 5, 8-poles, piercing termination unshielded version (UTP) 	09 15 300 0401	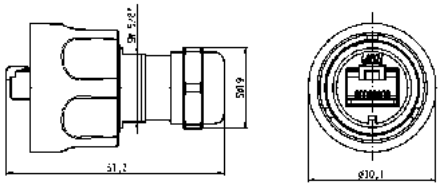	
fully shielded version (STP)	09 15 300 0402	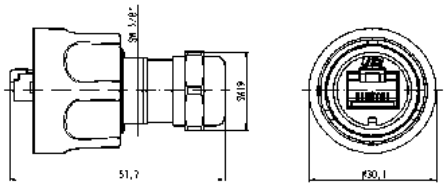	
Han-Max® RJ Industrial Connector Cat. 5, 4-poles, IDC termination 	09 15 300 0412	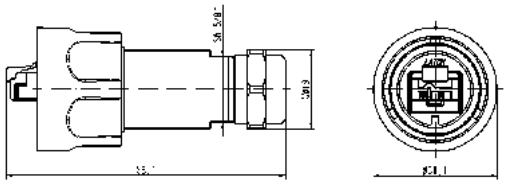	
Han-Max® RJ Industrial 10G Connector Cat. 6, 8-poles, IDC termination 	09 15 300 0431	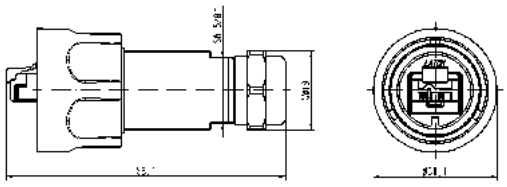	
Han-Max® Protection cover Cable side 	09 15 300 5401	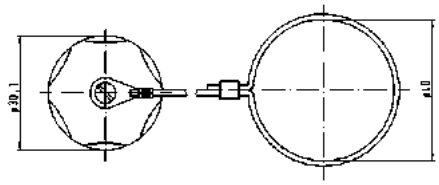	

04. Industrial Connector Han®

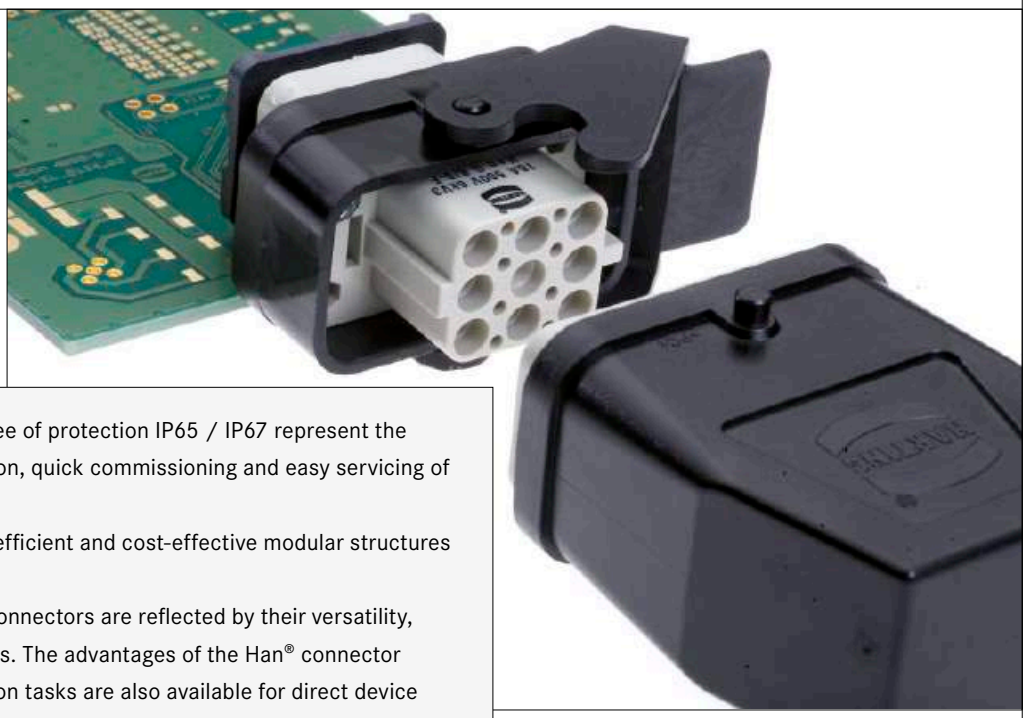

Han® industrial connectors with degree of protection IP65 / IP67 represent the worldwide standard for safe installation, quick commissioning and easy servicing of machines and plants.
The use of Han® connectors enables efficient and cost-effective modular structures of machines and plants.
The outstanding properties of Han® connectors are reflected by their versatility, application bandwidth and ruggedness. The advantages of the Han® connector family that users know from installation tasks are also available for direct device connections. The Han® connectors support the installation of automation systems in control cabinets and of IP65 / IP67 distributed devices using identical connectors.
Key user benefits: Investment and operational security.

Application profile:

CONNECTION TYPE		ENVIRONMENT		APPLICATION						
Board to Board	Cable/ Wire to Board	IP20	IP65 / IP67	Data	Signal	Power	high performance			
							Data transfer rate	Shielding	Number of contacts, contact density	Voltage, working current
	●		●	●	●	●		●	●	●

Cable termination

Han-Quick Lock®

●

IDC

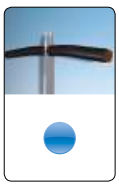

●

Crimp

●

Screw

●

Cage clamp

●

Axial screw

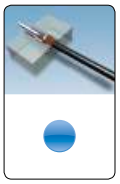

●

PCB termination

THT

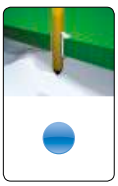

●

SMC

SMT

Press-in

Application standard

PROFINET PROFIsafe

ECOFAST

Housing integration

separate housing

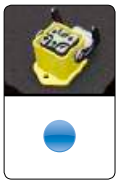

●

integrated housing

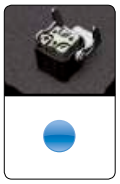

●

Contents

	Page
Han® 3 A RJ45	**04.04**
Han® 3 A 2 x LC duplex	**04.10**
Han® 3 A RJ45 Hybrid (3 x Power)	**04.11**
Han® 3 A LC duplex Hybrid (3 x Power)	**04.13**
Han® 3 A RJ45 Hybrid (4 x Power)	**04.15**
Han-Brid®	**04.20**
Han® Q 5/0 with pcb adapter	**04.30**
Han® Q 7/0 with pcb adapter	**04.32**
Han® Q 4/2 with pcb adapter	**04.36**
Han® Q 8/0 with pcb adapter	**04.38**
Han DD® with pcb adapter	**04.44**
Han E® with pcb adapter	**04.46**
Han-Modular® with pcb adapter	**04.48**

04. Industrial Connector Han®

Han® connectors with degree of protection IP65 / IP67 are established as the worldwide standard for industrial connectors. This standard connector can also be used directly as appliance connector.
The rugged housings are equipped with secure interlock mechanisms that protect the contact inserts from external negative influences such as dust, dampness and mechanical stress. On the appliance side, the connector contacts are routed in the bulkhead mount module, soldered directly onto the PCB and are aligned precisely to the bulkhead frame. This results in appliance connections that are resistant to any environmental stress.
The Han® appliance connectors offer comprehensive solutions based on connector inserts for data, signal and power lines up to 32 A per contact. The Han® 3 A housing can be equipped for communication applications with copper-bound RJ45 modules, 4-pole (Cat. 5) and 8-pole (Cat. 6) and optical LC modules.
The power contact inserts are available for the Han® 3 A, Han® Compact and Han® B housing variants. The cables can be wired to the contact inserts by way of crimp, screw or cage clamp terminals, or using the patented Quick-Lock® quick connection technology for on-site assembly.
HARTING highlights its Han® 3 A appliance connector series with versatile hybrid contact inserts for wiring data and power lines using a single connector and cable. This functionality results in a reduction of insertion points and cabling by more than 50%.
Han® connectors with high degree of protection can be used for wiring appliances, terminal boxes and control cabinets.

Han® APPLIANCE CONNECTORS:

The PCB-Adapter of HARTING can be used to convert Han® industrial connectors into fully-fledged PCB connectors.
The modular PCB adapters enable the implementation of various Han® contact inserts.

The PCB Adapter concept:

- The PCB adapter is processed as component in a standard soldering process and is a fixed part of the PCB.
- The contact insert of the Han® industrial connector is simply plugged in after the soldering process has been completed.
- The bulkhead mount housing with the bracket interlock is mounted to the appliance housing.

This modularity guarantees the availability of a wide range of contact inserts and connector housings for the assembly of a multitude of rugged IP65 / IP67 appliance connectors for data, signal and power lines.

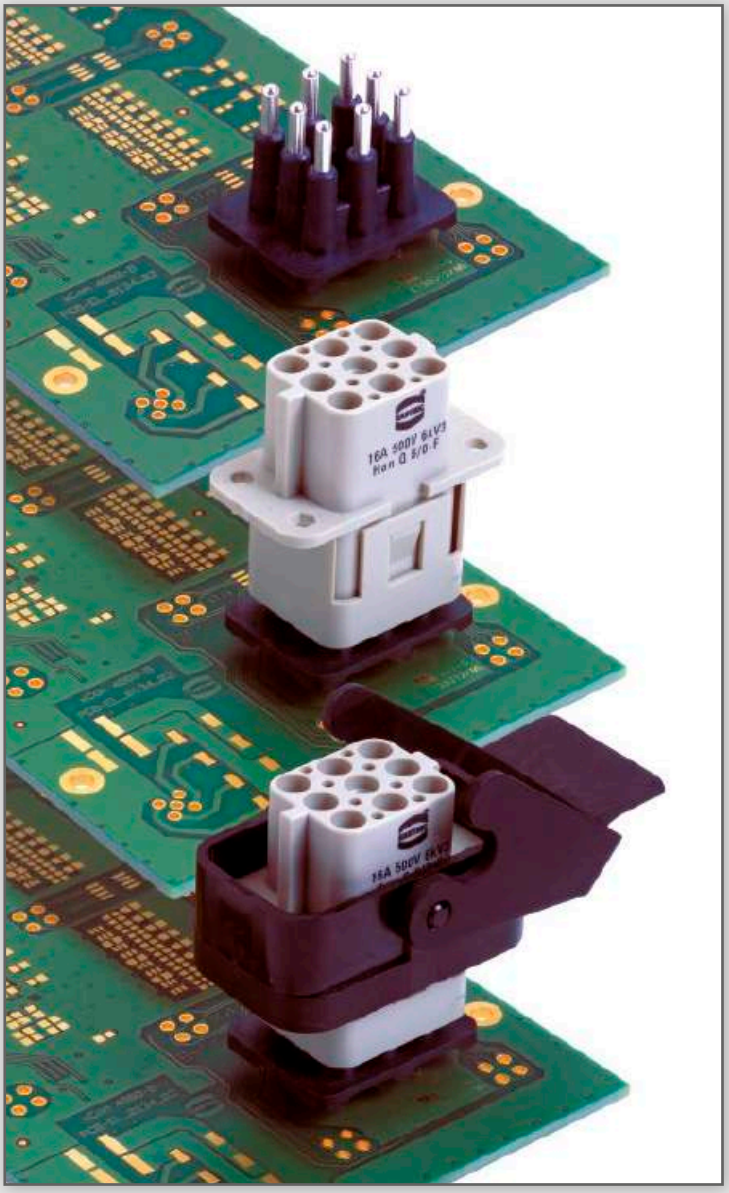

SCALABLE HYBRID APPLIANCE CONNECTION USING Han® CONNECTORS:

The hybrid appliance connector series enable the cost-effective combination of Fieldbus/Ethernet communication and power supply lines in a single cable and connector.
The contact insert combination for communication and for the power supply to the appliance is soldered directly to the PCB. The bulkhead mount housing can be adapted directly to the housing shape, or be mounted as separate unit to the appliance housing.
HARTING offers cable solutions for smaller batches which can be used to connect the contact insert to the PCB.
Key user benefits: A tailored appliance connection is always available for small- and large-scale appliance series.

Han® 3 A RJ45

Han® 3 A RJ45 device side

Advantages

- Simple mounting
- RJ45 plug-compatible
- Different versions cover all applications
- Coding (4 variants) possible

Technical characteristics

Number of ports Copper / termination	2 / 1x Han® 3 A RJ45 (IP65 / IP67) 1x RJ45 (IP20)
Transmission performance	Category 5 / Class D up to 100 MHz acc. to ISO/IEC 11801:2002, EN 50173-1
Transmission rate	10/100/1000 Mbit/s
Shielding	fully shielded, 360° shielding contact
Mounting	screw-on type on steel plate walls
Degree of protection	IP65 / IP67
Mating cycles	min. 500
Temperature range	-40 °C … +70 °C
Housing material Plastic version Metal version	 Polycarbonate, black, UL 94 V0 Zinc die-cast, powder coating, grey

Identification	Part number	Drawing	Dimensions in mm
Housing bulkhead mounting			
Plastic version, black	09 20 003 0327		
Metal version Standard	09 20 003 0301		
Metal version M	09 37 003 0301		
with fixed cover and with seal			
Metal version Standard	09 20 003 0306		
Metal version M	09 37 003 0306		
Adapter			
for fixing of RJ45 jack			
with fixing clip	09 45 515 0020		
without fixing clip	09 45 515 0022		
RJ45 jacks Cat. 5			
Solder variant SMD, 90° angled	09 45 551 1100[1] 09 45 551 1110[2]		
Solder variant overmolded, 90° angled	09 45 551 1102[1]		

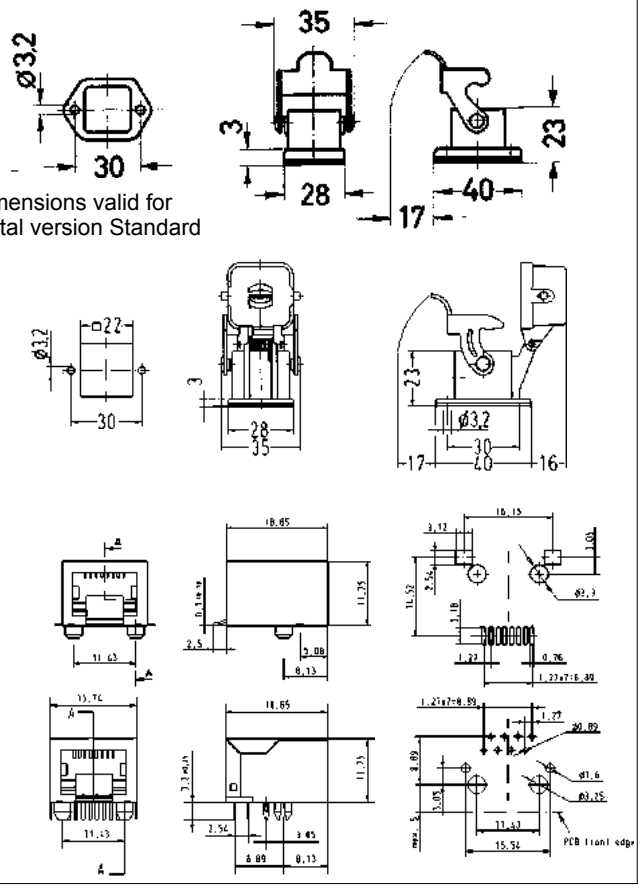

[1] Packaging: Blister à 120 pieces
[2] Packaging: Tape & Reel à 130 pieces

Han® 3 A RJ45-panel feed-throughs and couplings Cat. 5

Identification		Part number	Drawing	Dimensions in mm
Panel feed-through set, 8-poles				
Plastic version, black	straight	09 45 225 1100		
	angled	09 45 225 1108		
Metal version Standard, grey	straight	09 45 215 1100		
	straight, inner vertical jack	09 45 215 1101		
	angled	09 45 215 1108		
Metal version Standard, grey with self-closing protective cap	straight	09 45 215 1103		
Metal version M, black	straight	09 45 215 1102		
	angled	09 45 215 1109		
Coding pin set for 4 different codings		09 45 820 0000		
			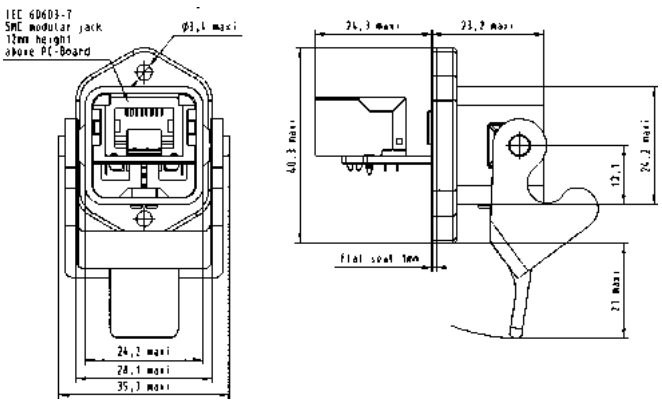	Dimensions valid for plastic version, straight
Double coupling, 8-poles incl. installation frame metal				
Plastic version, black		09 45 225 1107		
Metal version Standard, grey		09 45 215 1107		
Metal version M, black		09 45 215 1110		
Coding pin set for 4 different codings		09 45 820 0000		
			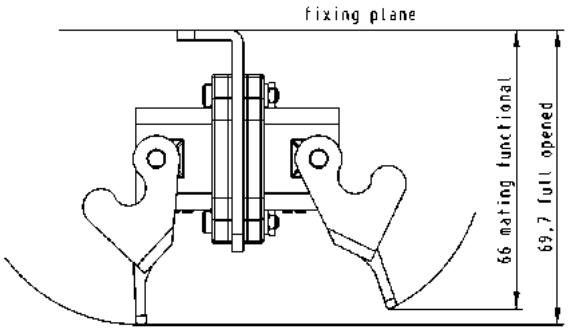	Dimensions valid for plastic version
Protection cover for panel feed-through IP65 / IP67 with seal				
Plastic version, black		09 20 003 5449		
Metal version Standard, grey		09 20 003 5425		
Metal version M, black		09 37 003 5405		
			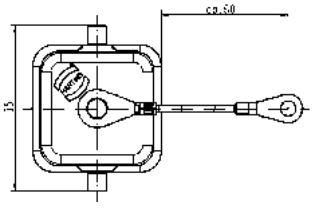	Dimensions valid for plastic version

Han® 3 A RJ45

Han® 3 A RJ45 10G Cat. 6 – panel feed-throughs

Advantages

- Compact and robust design
- 360° shielding
- Easy mounting
- Transmission category 6, performance class E_A, suitable for 1/10 Gigabit Ethernet
- RJ45 mating compatible
- Coding (4 variants) possible

Technical characteristics

Number of ports	2 / 1x Han® 3 A RJ45 (IP65 / IP67) 1x RJ45 (IP20)
Transmission performance	Category 6 / class E_A acc. to ISO/IEC 11 801:2002, EN 50 173-1
Transmission rate	10/100 Mbit/s and 1/10 Gbit/s
Shielding	Fully shielded, 360° shielding contact
Mounting	Screwable to cover plates
Degree of protection	IP65 / IP67
Mating cycles	min. 500
Temperature range	-40 °C ... + 70 °C
Housing material	
Plastic version	Polycarbonate, black, UL 94 V0
Metal version	Zinc die-cast, powder-coated

Identification	Part number	Drawing	Dimensions in mm
Panel feed-through set, 8-poles			
Plastic version, black	09 45 225 1560		
Metal version Standard, grey	09 45 215 1560		
Metal version M, black	09 45 215 1561		
Metal version Standard, grey, with self-closing protective cap	09 45 215 1562		
Han® 3 A RJ45 10G insert Cat. 6 (for Han® 3 A housings)	09 45 200 1560		
Han® 3 A RJ45 HIFF adapter to mount HIFF inserts (e.g. HARTING RJ Industrial® 10G RJ45 bulkhead or Ha-VIS preLink® RJ45) in Han® 3 A housings	09 45 515 0024		

Han® 3 A RJ45

Han® 3 A connector RJ45, 4-poles, Cat. 5

Advantages

- RJ45 Ethernet-Data connector suitable for industry
- Tool-less field-assembly with *HARAX*® rapid termination in IDC technology
- Category of transmission Cat. 5
- Compact design and very robust housing
- Suitable for termination of solid and stranded cables
- Up to 10 x reconductable
- PROFINET compatible
- Min. 500 mating cycles

Technical characteristics

Connector type	Han® 3 A Connector RJ45 acc. to IEC 61076-3-106 variant 5
Number of contacts	4
Transmission performance	Category 5 / Class D up to 100 MHz acc. to ISO/IEC 11801:2002, EN 50173-1
Transmission rate	10/100 Mbit/s
Shielding	fully shielded, 360° shielding contact
Cable termination	tool-less with IDC contacts
Conductor cross section	
stranded	AWG 24/7 - AWG 22/7
solid	AWG 23/1 - AWG 22/1
Conductor diameter	max. 1.6 mm
Cable outer diameter	6.5 mm – 9.5 mm
Degree of protection	IP65 / IP67
Temperature range	-40 °C … +70 °C
Housing material	
Plastic version	Polycarbonate, UL 94 V0, black
Metal versions	
Standard	Zinc die-cast, powder coating grey
M-version	Zinc die-cast, powder coating black

Identification		Part number
Han® 3 A connector set RJ45, 4-poles incl. housing, cable gland and instruction manual		
Plastic version, black	straight	09 45 125 1100
	angled	09 45 125 1104
Metal version Standard, grey	straight	09 45 115 1100
	angled	09 45 115 1104
Metal version M, black	straight	09 45 115 1102
	angled	09 45 115 1106
Coding pin set		09 45 820 0000

Drawing — Dimensions in mm

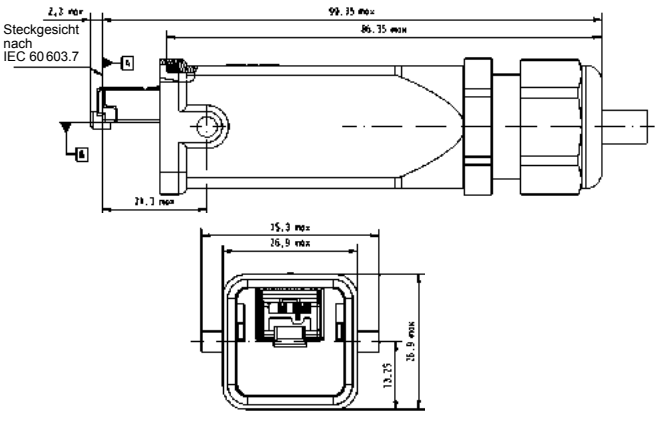

Dimensions valid for plastic version, straight

Assembled system cables see catalogue “Intelligent Network Solutions”

Han® 3 A RJ45

Han® 3 A connector set RJ45, 8-poles, Cat. 6_A

Advantages

- RJ45 Ethernet-Data connector suitable for industry
- Field-assembly with mounting tool
- Category of transmission Cat. 6_A
- Compact design and very robust housing
- Min. 500 mating cycles

Technical characteristics

Connector type	Han® 3 A Connector RJ45
Number of contacts	8
Transmission performance	Category 6_A / Class E_A up to 500 MHz acc. to ISO/IEC 11 801:2002, EN 50 173-1
Transmission rate	10/100 Mbit/s and 1/10 Gbit/s
Shielding	fully shielded, 360° shielding contact
Cable termination	with piercing contacts
Conductor cross section	AWG 28/7 - AWG 24/7, stranded
Conductor diameter	max. 1.05 mm
Cable outer diameter	6.5 mm – 9.5 mm
Degree of protection	IP65 / IP67
Temperature range	-40 °C … +70 °C
Housing material	
Plastic version	Polycarbonate, UL 94 V0, black
Metal versions	
Standard	Zinc die-cast, powder coating grey
M-version	Zinc die-cast, powder coating black

Identification	Part number
Han® 3 A connector set RJ45, 8-poles, Cat. 6 incl. housing, cable gland and instruction manual	
Plastic version, black	09 45 125 1520
Metal version Standard, grey	09 45 115 1520
Metal version M, black	09 45 115 1522
Han® 3 A RJ45 connector insert can be combined with Han® 3 A housing	09 45 100 1520
Coding pin set	09 45 820 0000
suitable assembly tool	09 45 800 0520

Drawing — Dimensions in mm

Mating face acc. to IEC 60 603-7

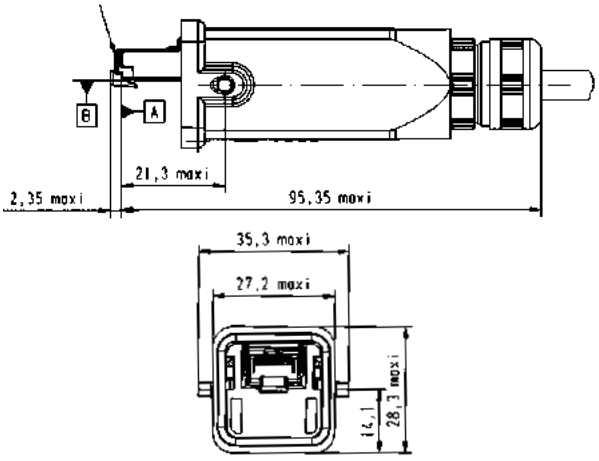

Dimensions valid for metal version Standard

Han® 3 A RJ45

Han® 3 A RJ45 10G connector, 8-poles, Cat. 6

Advantages

- RJ45 Ethernet-Data connector suitable for industry
- Tool-less field-assembly with *HARAX*® rapid termination in IDC technology
- Category of transmission Cat. 6
- Compact design and very robust housing
- Suitable for termination of solid and stranded cables
- PROFINET compatible
- Min. 500 mating cycles

Technical characteristics

Connector type	Han® 3 A Connector RJ45 acc. to IEC 61076-3-106 variant 5
Number of contacts	8
Transmission performance	Category 6 / Class E_A up to 500 MHz acc. to ISO/IEC 11801:2002, EN 50173-1
Transmission rate	10/100 Mbit/s and 1/10 Gbit/s
Shielding	fully shielded, 360° shielding contact
Cable termination	tool-less with IDC contacts
Conductor cross section	
stranded	AWG 27/7 - AWG 22/7
solid	AWG 24/1 - AWG 22/1
Conductor diameter	max. 1.6 mm
Cable outer diameter	6.5 mm – 9.5 mm
Degree of protection	IP65 / IP67
Temperature range	-40 °C … +70 °C
Housing material	
Plastic version	Polycarbonate, UL 94 V0, black
Metal versions	
Standard	Zinc die-cast, powder coating grey

Identification		Part number
Han® 3 A RJ45 connector, 8-poles incl. housing, cable gland and instruction manual		
Plastic version, black	straight	09 45 125 1560
Metal version Standard, grey	straight	09 45 115 1560
Han® 3 A RJ45 connector insert can be combined with Han® 3 A housing	straight	09 45 100 1560
Coding pin set		09 45 820 0000

Drawing — Dimensions in mm

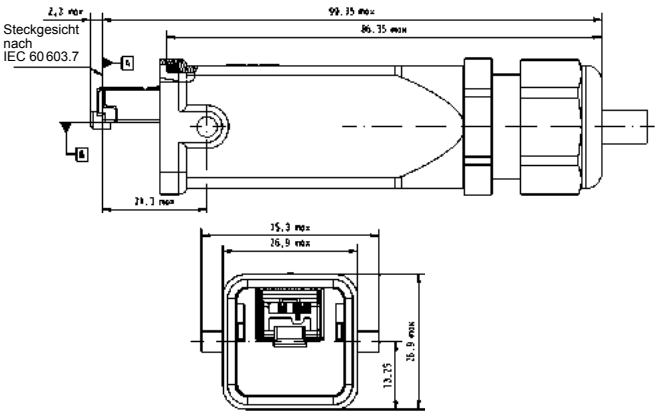

Dimensions valid for plastic version, straight

Assembled system cables see catalogue “Intelligent Network Solutions”

Han® 3 A 2 x LC duplex

Han® 3 A 2 x LC duplex

Advantages

- Compact, space-saving Design
- Just one LWL modul for high mechanical load
- High packing density
- A & B parts identification according to TIA 568 standard

Technical characteristics

Degree of protection	IP65 / IP67
Temperature range	-40 °C … +70 °C
Housing material	Zinc die-cast powder coating black

Identification	Part number	Drawing	Dimensions in mm
Components device side			
Multimode GOF	09 57 467 0004 000	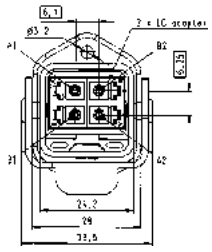	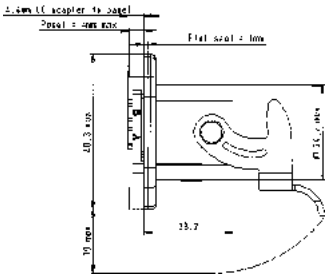
Singlemode GOF	09 57 467 0005 000	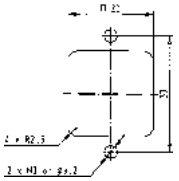	
Connector			
Multimode GOF	09 57 407 0001 000	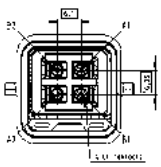	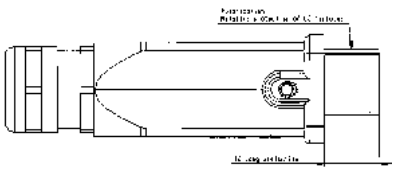
Singlemode GOF	09 57 407 0002 000		

Han® 3 A RJ45 Hybrid

Han® 3 A RJ45 Hybrid

Advantages

- RJ45 Ethernet-Data connector suitable for industry with Power contacts for hybrid applications
- Field-assembly with mounting tool
- Category of transmission Cat. 5
- Compact design and very robust housing
- Suitable for termination with solid and stranded cables
- Protection against direct contact on cable and device side according to EN 60529

Reference note:
For cat. 6 patch cords it is recommended to use 1 connector with a white cable manager and one with a blue cable manager, in order to optimise the crosstalk between different signal pairs.

Technical characteristics

Degree of protection	IP65 / IP67
Mating interface	RJ45, 8-poles acc. to IEC 60603-7 plus 3x power
Temperature range	-40 °C … +70 °C
Housing material	Zinc die-cast, powder coating black
Data	
Transmission performance	Category 5 / Class D up to 100 MHz acc. to ISO/IEC 11801:2002, EN 50173-1
Transmission rate	10/100/1000 Mbit/s
Shielding	fully shielded, 360° shielding contact
Cable diameter stranded	AWG 28/7 - AWG 24/7
Power	
Number of contacts	3 (AC: L1, PE, N / DC: V+, GND, V-)
Working voltage	300 V AC/DC
Working current	12 A @ 70 °C (see current carrying capacity Han D® contacts)
Cable diameter	2.5 mm²

Identification	Part number	Drawing	Dimensions in mm
Components device side			
incl. 3x Han D® female contacts			
AC version	09 57 368 0500 000		
DC version	09 57 368 0501 000		
Cable side			
Connector incl. 3x Han D® male contacts			
AC version	09 57 308 0500 000		
DC version	09 57 308 0501 000		
suitable assembly tool	09 45 800 0520		

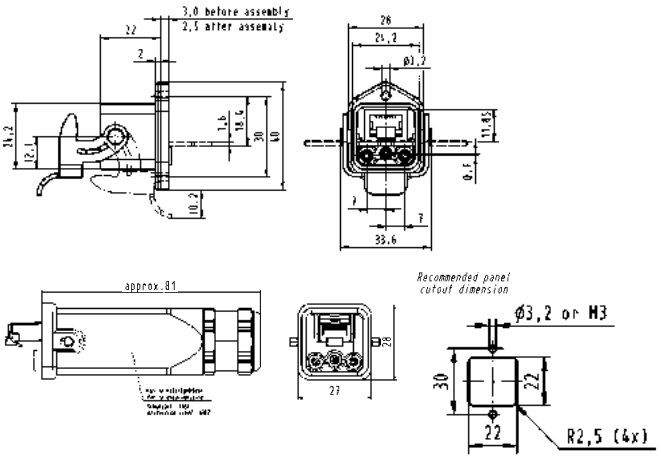

Hybrid cable assembly

Identification	Part number	Drawing	Dimensions in mm
Hybrid cable, double ended, 4 x 2 x AWG 26/7 + 3 x 2.5 mm²		double ended	
Length: 1 m		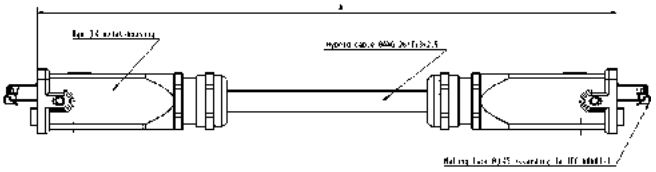	
AC version	33 57 211 0010 001		
DC version	33 57 211 0010 002		
Length: 5 m		a = length	
AC version	33 57 211 0050 001		
DC version	33 57 211 0050 002		
Length: 10 m		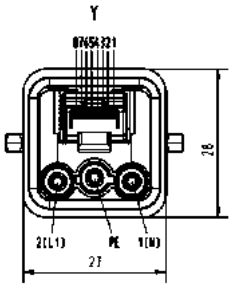	
AC version	33 57 211 0100 001		
DC version	33 57 211 0100 002		
Length: 20 m			
AC version	33 57 211 0200 001		
DC version	33 57 211 0200 002		
Hybrid cable, single ended, 4 x 2 x AWG 26/7 + 3 x 2.5 mm²			
Length: 1 m			
AC version	33 57 111 0010 002	Protection level: IP65 / IP67	
DC version	33 57 111 0010 001		
Length: 5 m		Data part: Transmission properties in accordance with ISO/IEC 11801:2002: Class D	
AC version	33 57 111 0050 002		
DC version	33 57 111 0050 001		
Length: 10 m			
AC version	33 57 111 0100 002	single ended	
DC version	33 57 111 0100 001	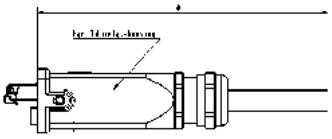	
Length: 20 m			
AC version	33 57 111 0200 002		
DC version	33 57 111 0200 001	a = length	
Hybrid outdoor cable			
Length: 10 m	33 57 851 0100 001		PVC jacket 4 x 2 x AWG 26/7 + 3 x 2.5 mm² Outer diameter: 12 mm Min. bending radius: single: 5 x OD repeated: 10 x OD
Length: 20 m	33 57 851 0200 001		
Length: 500 m	33 57 851 5000 001		

Han® 3 A LC duplex Hybrid

Han® 3 A LC duplex Hybrid

Advantages

- Small form factor (compared to SC and ST®)
- Compact, space-saving Design
- Combined to only one LWL-module for high mechanical load
- High packing density
- A & B parts identification according to TIA 568 standard

Technical characteristics

Degree of protection	IP65 / IP67
Temperature range	-40 °C … +70 °C
Data	
Mating module	LC duplex (2 fibres)
Cable diameter	6.0 … 9.0 mm
Power	
Number of contacts	3 (AC: L1, PE, N / DC: V+, GND, V-)
Working voltage	300 V AC/DC
Working current	12 A @ 70°C
Housing material	Aluminium die-cast, black

Identification		Part number	Drawing	Dimensions in mm
Components device side				
Power: 3x Han D® male contacts				
Data: Multimode GOF	AC	09 57 568 0500 000		
	DC	09 57 568 0510 000		
Data: Singlemode GOF	AC	09 57 568 0501 000		
	DC	09 57 568 0511 000		
Connector				
Power: 3x Han D® female contacts				
Data: Multimode GOF	AC	09 57 508 0500 000		
	DC	09 57 508 0510 000		
Data: Singlemode GOF	AC	09 57 508 0501 000		
	DC	09 57 508 0511 000		

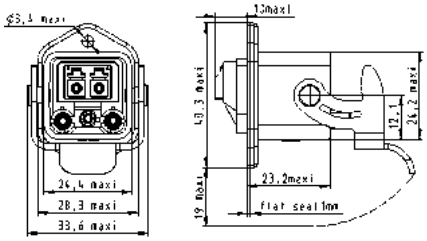

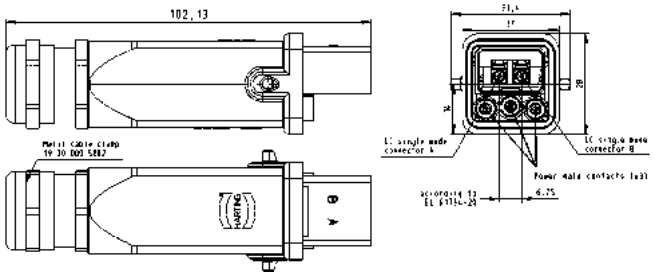

Han® 3 A LC duplex

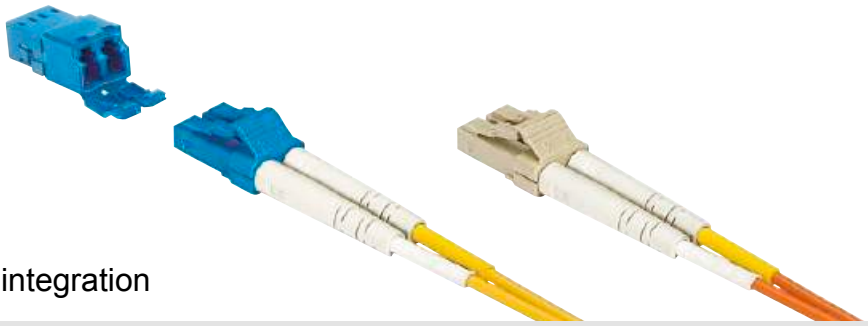

LC duplex IP20 adapter for device integration

Advantages

- Small form factor (compared to SC and ST®)
- Compact, space-saving Design
- High packing density
- A & B partsidentification according to TIA 568 standard
- Complement adapter for IP67 connector on device side

Technical characteristics

Degree of protection	IP20
Mating interface	LC duplex with two fibres
Temperature range	-40 °C … +70 °C

Identification	Part number
Device side Adapter	
Multimode GOF	09 57 400 0003 000
Singlemode GOF	09 57 400 0004 000
Connector LC duplex	
Multimode GOF	09 57 400 0001 000
Singlemode GOF	09 57 400 0002 000

Drawing — Dimensions in mm

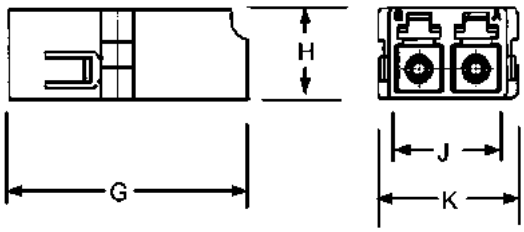

	min.	max.
G	26.60	26.80
H	9.35	9.45
J	12.80	12.90
K	15.24	15.34

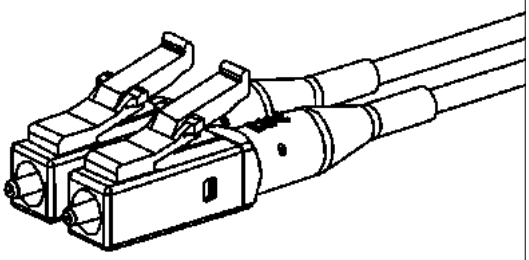

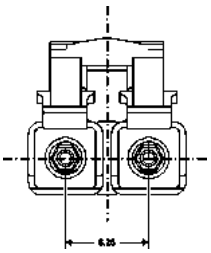

Han® 3 A RJ45 Hybrid

Han® 3 A RJ45, Hybrid

General information

With the RJ Industrial Hybrid connector, HARTING has developed an interface solution that integrates the data lines and the power supply into one connector for hybrid Ethernet networks. The connector's geometry nevertheless maintains a clear separation between the data and the power contacts. This brings a significant reduction in the costs of installation and of field devices suitable for industrial application with hybrid cabling.

The panel feed-through is compatible with RJ45 connectors, which means that the standard patch cables for service and test purposes can be used. The data lines are connected at the rear via an RJ45 jack, while the power lines use a cage clamp terminal.

Optional the hybrid interface can be integrated in the device directly, thus preventing the use of rear side data lines.

The four power contacts of the hybrid module have also been designed with HARAX® rapid termination technology, allowing stranded cables of up to 1.5 mm² to be connected.

Current carrying capacity „Power contacts“

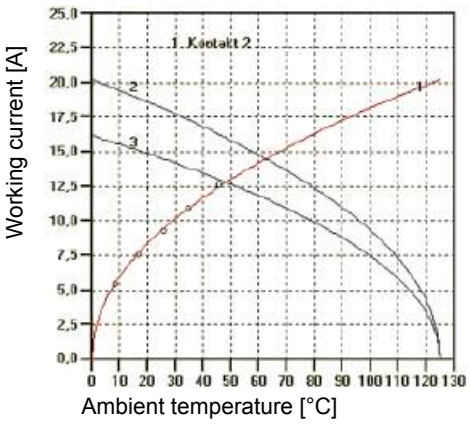

1 Temperature rise

2 Derating

3 Derating curve at I_{max} * 0.8 (DIN IEC 512)

Technical characteristics

Connector	
Degree of protection	IP65 / IP67
Mating interface	RJ45, 4-poles acc. to IEC 60603-7 plus 4x power
Temperature range	-40 °C … +70 °C
Housing material	
Plastic version	UL 94 V0, black
Metal version	Zinc die-cast, grey
Mating cycles	min. 500
Mounting	field-assembly
Data Cat. 5, 4-poles	
Transmission performance	Category 5 / Class D up to 100 MHz acc. to ISO/IEC 11801:2002, prEN 50173-1
Transmission rate	10/100 Mbit/s
Cable diameter	
stranded	AWG 24/7 - AWG 22/7
solid	AWG 23/1 - AWG 22/1
Data Cat. 6, 8-poles	
Transmission performance	Category 6 / Class E_A up to 500 MHz acc. to ISO/IEC 11801:2002, prEN 50173-1
Transmission rate	10/100 Mbit/s / 1 Gbit/s
Cable diameter	
stranded / solid	AWG 27 - AWG 22
Both, data Cat. 5 and Cat. 6	
Shielding	fully shielded, 360° shielding contact
Cable outer diameter	10.0 mm – 11.0 mm
Power	
Number of contacts	4 for cable diameter 1.5 mm² stranded
Working voltage	48 V
Working current	16 A, see current carrying capacity
	UL approved (E102079)
Panel feed-through	
Mating interface extern:	RJ45 female acc. to IEC 60603-7 plus 4 x power
Mating interface intern:	RJ45 female acc. to IEC 60603-7 4 x power via cable cage clamp 1.5 mm²

Han® 3 A RJ45 Hybrid

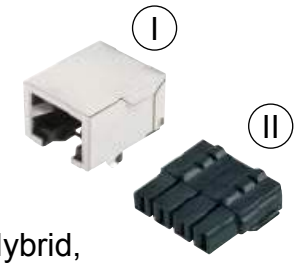

Han® 3 A, Hybrid, components device side panel feed-throughs

Identification	Part number	Drawing	Dimensions in mm
RJ45 female for direct device integration solder variant SMD 90° angled I	 09 45 551 1100[1)] 09 45 551 1110[2)]	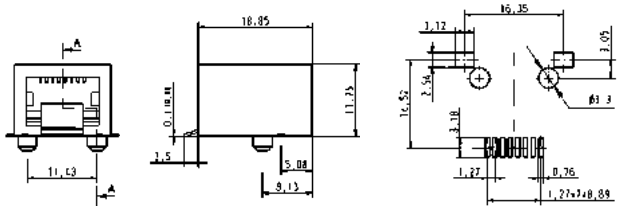	pcb layout
Power module with 4 contacts for direct device integration Reel with 100 pieces II	 09 45 525 0040 09 45 525 0041	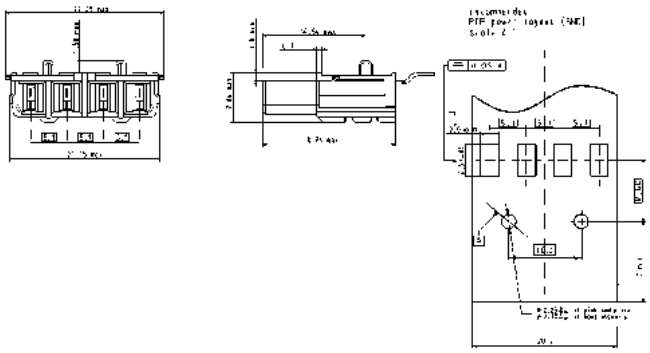	
Housing bulkhead mounting **separate** incl. flat seal for direct device integration Plastic version, black Metal version Standard, grey Metal version M, black Metal version EMC, unpainted III	 09 45 525 0021 10 12 005 1004 09 45 525 0027 09 45 525 0028	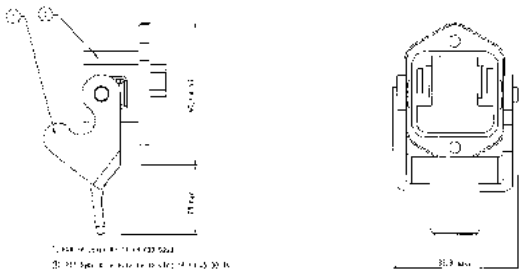	Dimensions valid for plastic version
Panel feed-through set Plastic version, black, Cat. 5 Metal version Standard, grey, Cat. 5 Metal version M, black, Cat. 5 Metal version Standard, grey, Cat. 6 Metal version M, black, Cat. 6 IV	 09 45 225 1300 10 12 005 1002 09 45 215 1301 09 45 215 1760 09 45 215 1761	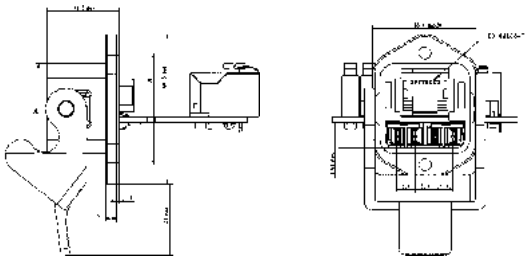	
Protection cover for panel feed-through IP65 / IP67 Plastic version, black Metal version Standard, grey Metal version M, black	 09 20 003 5449 09 20 003 5425 09 37 003 5405	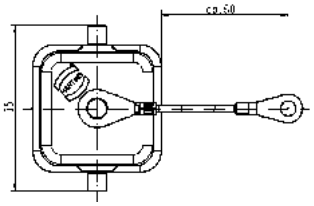	

[1)] Packaging: Blister à 120 pieces
[2)] Packaging: Tape & Reel à 130 pieces

Technical characteristics and general informations see page 04.15

Han® 3 A RJ45, Hybrid

Identification	Part number	Drawing	Dimensions in mm
Connector, Cat. 5, 4 + 4-poles (IDC termination for RJ45 insert)			
Plastic version, black	09 45 125 1300		
Metal version Standard, grey	10 12 005 2001		
Connector, Cat. 6, 8 + 4-poles (IDC termination for RJ45 insert)			
Plastic version, black	09 45 125 1760		
Metal version Standard, grey	09 45 115 1760		
Connector insert for Han® 3 A housings	09 45 100 1760		
Connector, Cat. 6, 8 + 4-poles (with piercing connection AWG 28/7 - 24/7)			
Plastic version, black	09 45 125 1720		
Metal version Standard, grey	09 45 115 1720		
Connector insert for Han® 3 A housings	09 45 100 1720		
suitable assembly tool	09 45 800 0520		
Protection cover for connector IP65 / IP67 without seal			
Plastic version, black	09 20 003 5442		
Metal version Standard, grey	09 20 003 5422		
Metal version M	09 37 003 5402		

Dimensions valid for plastic version

Technical characteristics and general informations see page 04.15

Han® 3 A RJ45 Hybrid

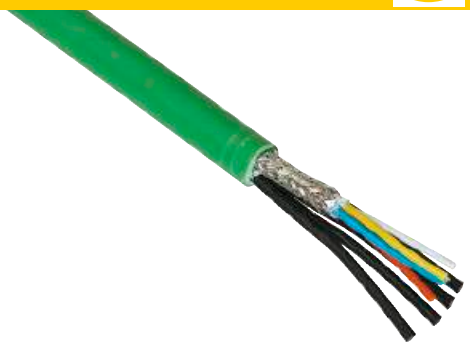

PROFINET Type B cable, Hybrid
Industrial Cat. 5 Hybrid cable, 4-wire + 4x Power
to make up Hybrid system cables

Advantages

- Robust design for industrial environment
- PROFINET-conform
- Additional power supply
- Hybrid Cat. 5 cable, 4-wire + 4x Power

Technical characteristics

Cable construction	Star quad + 4 Power cables, double shielded
Core structure	4 x AWG 22/7 + 4 x 1.5 mm² (conductor 84 x 0.15 mm²)
Sheath material	FRNC
Cable outer diameter	9.7 mm
Transmission performance	Category 5 / Class D up to 100 MHz acc. to ISO/IEC 11801:2002, EN 50173-1
Transmission rate	10/100 Mbit/s
Shielding	Shielding foil and shielding braid
Temperature range	-20 °C … +70 °C
Standard lengths	10 m / 20 m / 50 m / 100 m
Colour	green

Identification	Part number	Drawing	Dimensions in mm
PROFINET Type B cable, Hybrid Industrial Cat. 5 Hybrid cable, 4-wire + 4x Power			
10 m ring	09 45 600 0310		
20 m ring	09 45 600 0330		
50 m ring	09 45 600 0340		
100 m ring	09 45 600 0300		
500 m reel	09 45 600 0320		

Assembled system cables see catalogue “Intelligent Network Solutions”

Han® 3 A RJ45 Hybrid

Industrial Cat. 6 Hybrid
Installation cable, 8-wire

Advantages

- Robust design for industrial environment
- PROFINET-conform
- Additional power supply
- Hybrid Cat. 6 cable, 4-wire + 4x Power

Technical characteristics

Cable structure	4 x 2, Twisted Pair, shielded, PIMF 4 power cores
Core structure	4 x 2 x AWG 26/7, stranded 4x 84 * 0.15 mm (cord 1.5 mm²), stranded
Sheath material	PUR
Cable sheath diameter	10 ... 10.6 mm
Transmission performance	Category 6 / Class E up to 250 MHz according to ISO/IEC 11 801:2002, EN 50 173-1
Transmission rate	10/100/1000 Mbit/s
Shielding	Paired shielded with additional cable shield
Operating temperature range	–20 °C … +80 °C
Supply lengths	20 m / 50 m / 100 m other lengths on request
Colour	black

Identification	Part number	Drawing	Dimensions in mm
Industrial Cat. 6 Hybrid installation cable, 8-wire PUR			
20 m ring	09 45 600 0332		
50 m ring	09 45 600 0342		
100 m drum	09 45 600 0302		

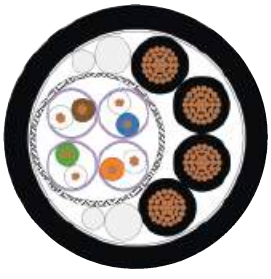

Assembled system cables see catalogue “Intelligent Network Solutions”

Features

General Description

The Han-Brid® series allows the connection of a data interface and a power supply in a single space saving connector. This means that it is now possible to provide data transmission and power to devices in a single bus structure. This hybrid connector family includes provision for connection of a max. 50 V, 10 A power supply together with a range of inserts for connection of a variety of data protocols and transmission medias:

- Han-Brid® F.O. for plastic (POF) or for HCS®* optical fibre
- Han-Brid® Cu for shielded twisted pair.
- Han-Brid® Quintax 3 A for shielded 4 wire bus systems (2 pair STP)
- Han-Brid® RJ45 C for Ethernet application
- Han-Brid® USB / Firewire for fast data transmission

Han-Brid® inserts fit to the standard plastic as well as metal hoods and housings with seal of the Han® 3A series offering a degree of protection IP65 according to DIN EN 60 529. For harsher environments Han® 3 HPR hoods and housings with a degree of protection of IP68 can be used.

Power supply

- Han D® male and female with standard crimp contacts
- Rated current 10 A
- Rated voltage 50 V
- Wire gauge 0.14 - 2.5 mm²
- Approval

* HCS® Hard Clad Silica (is registered trade mark of the SpecTran Corporation)

Data interfaces

Han-Brid® F.O.

- Is suitable for all HP Versatile Link (Horizontal Package) transmitters and receivers
- Data rates: Standard 12 Mbit/s, suitable for all common fieldbus systems
- Insert allows integration of HP standard contacts for POF and HCS®* fibres
- Temperature range -40 °C ... +70 °C

Han-Brid® Cu

- For termination of a shielded twisted pair
- Insert for 2x Han D® male or female contacts
- Connection of the shield by means of shielding plate and fixing clamps
- Connection of the device side can be realized either by a printed circuit board as a modular version or as part of the appliance PCB
- Insert for bulkhead mounted housing or the coupling housing are always equipped with a screening spring

Bus Terminator

- Active bus terminator in male and female version
- Standard Han® 3 A hoods and housings
- Power supply to the termination network via electrical contacts of Han-Brid®
- Integrated, galvanically separated DC/DC converter 24 V / 5 V

Han-Brid® Quintax 3 A

- Possibility to terminate shielded 4 wires conductors (2 pair STP)
- Suitable for all 4-wire bus systems
- Suitable for shielded cable conductor diameter 3 – 9.5 mm
- Transmission of shielding separately from the hood's ground
- Connections are carried out acc. to DIN EN 50 173, Cat. 5
- Temperature range -40 °C ... +70 °C

Han-Brid® RJ45 C

- Suitable for standard RJ45 Plug and Jack, shielded version
- Connections provided for conductors acc. to DIN EN 50 173, Cat. 5
- Termination from the device side is carried out via a PCB, two versions are possible: modular version or as part of the appliance PCB
- Assembly with standard tools
- Insert for 2 Han-D® male or female contacts offers the combination with electrical bus connector
- Rated current 10 A
- Rated voltage 24 V
- Wire gauge 0.14 - 2.5 mm²

Han-Brid® USB

- Insert for all Han® 3 A hoods and housings
- Hood with glued sealing
- Simple and low-cost termination via insert of a patch cable
- Strain-relief via cable tie

Han-Brid® FireWire

- Insert for all Han® 3 A hoods and housings
- Hood with glued sealing
- Simple and low-cost termination via insert of a patch cable
- Strain-relief via cable tie
- Compatible to IEEE 1394

* HCS® Hard Clad Silica (is registered trade mark of the SpecTran Corporation)

Overview (Sample: Han-Brid® Cu)

Thermoplastic
09 20 003 0320 (light grey)
09 20 003 0327 (black)

Metal
09 20 003 0301

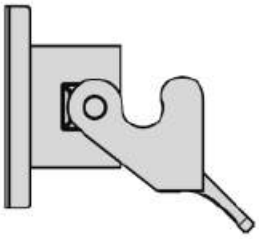

Device side
09 12 006 2611
09 12 006 2695
09 12 006 2694

Cable side
09 12 006 3111

Thermoplastic
09 20 003 0423 (light grey)
09 20 003 0426 (black)
19 20 003 0423 (light grey)
19 20 003 0427 (black)

Metal
09 20 003 1443
19 20 003 1443

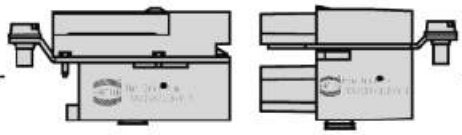

Thermoplastic
09 20 003 0720 (light grey)
09 20 003 0727 (black)
19 20 003 0720 (light grey)
19 20 003 0727 (black)

Metal
09 20 003 1750
19 20 003 1750

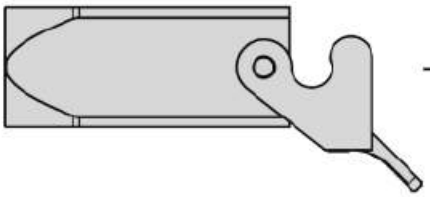

Device side
09 12 006 2701
09 12 006 2795
09 12 006 2794

Cable side
09 12 006 3001

Thermoplastic
09 20 003 0623 (light grey)
09 20 003 0626 (black)
19 20 003 0623 (light grey)
19 20 003 0627 (black)

Metal
09 20 003 1643
19 20 003 1643

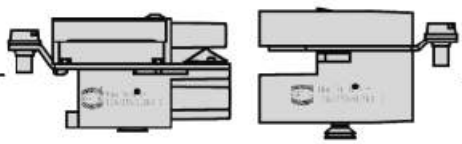

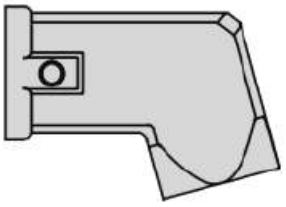

Thermoplastic
09 20 003 0220 (light grey)
09 20 003 0227 (light grey)
19 20 003 0220 (light grey)
19 20 003 0227 (black)

Metal
09 20 003 1250
19 20 003 1250

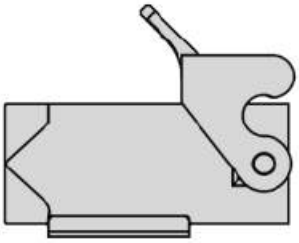

Hybrid field bus connector
for shielded twisted pair
+ 4 electrical contacts 10 A
+ option for PE

Identification	Part number Male insert (M)	Female insert (F)	Drawing	Dimensions in mm
Cable side Female insert 	**09 12 006 3111**		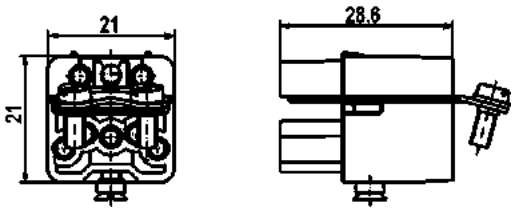 View from termination side 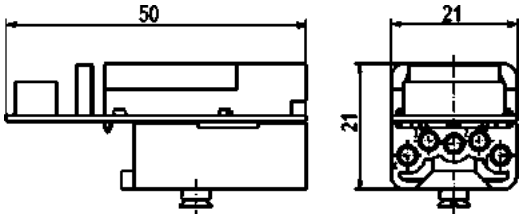	
Device side Male insert 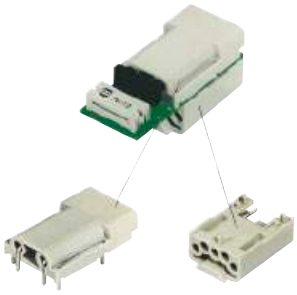	09 12 006 2611 Also available as single part loaded 09 12 002 2611 unloaded 09 12 002 3011	 Also available as single part unloaded 09 12 004 3011		
Cable side Male insert 	**09 12 006 3001**		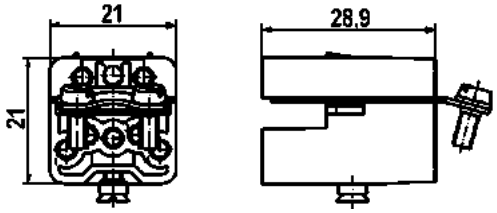 View from termination side 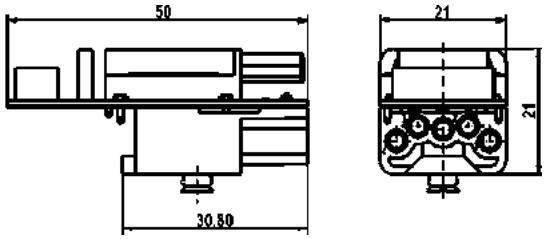	
Device side Female insert 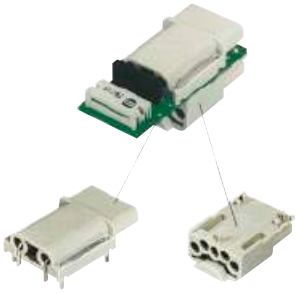	09 12 006 2701 Also available as single part loaded 09 12 002 2701 unloaded 09 12 002 3101	 Also available as single part unloaded 09 12 004 3101		

Stock items in bold type

Identification	Part number Male insert (M)	Part number Female insert (F)	Drawing	Dimensions in mm
Panel feed-through with cage clamp 	**09 12 006 2695**	**09 12 006 2795**	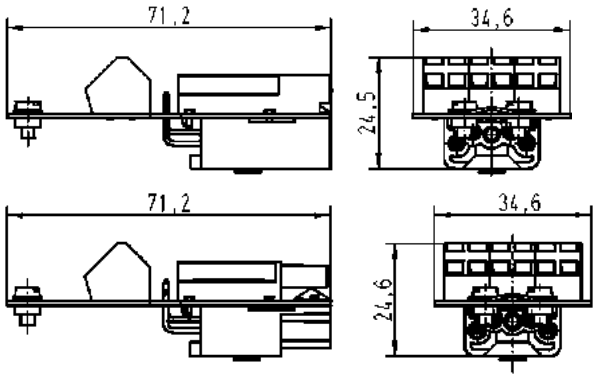	
Coupling / Panel feed-through X = Cutting off the fin allows the use in cable to cable housings	**09 12 006 2694**	**09 12 006 2794**	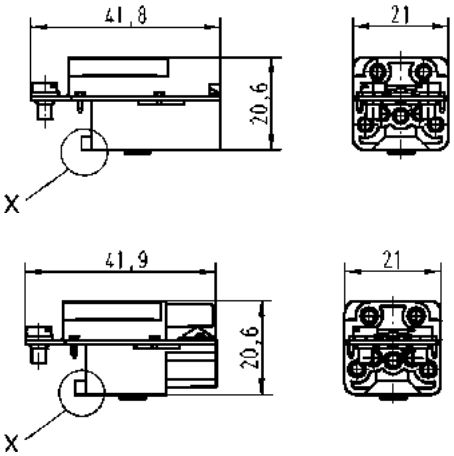	
Bus terminator Plastic hoods/housings Hoods/Housings, metal 	**09 12 006 2691** **09 12 006 2692**	09 12 006 2791 09 12 006 2792	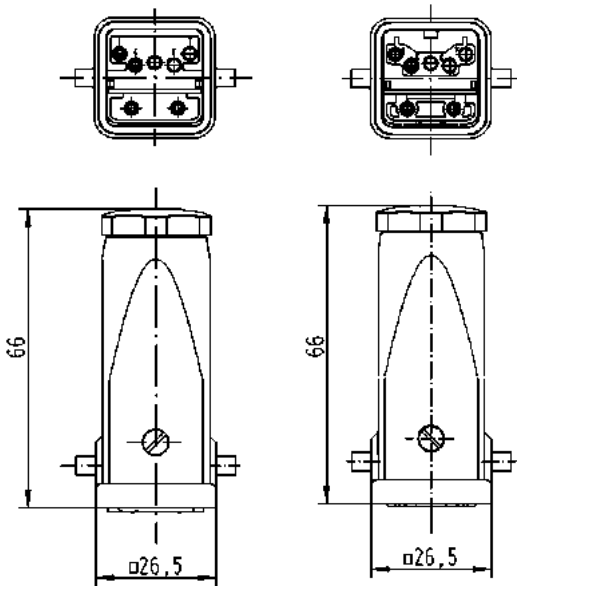	

Stock items in bold type

Hybrid field bus connector
with F.O. transmitter and receiver
+ 4 electrical contacts 10 A
+ option for PE

Identification	Part number Male insert (M)	Part number Female insert (F)	Drawing	Dimensions in mm
Cable side F.O. (m) + Han D® (f)	Also available as single part for POF 09 12 004 2711 for POF crimpless 09 12 004 2713 for HCS®* fibre 09 12 004 2716	Also available as single part for POF 09 12 004 3111 for POF crimpless 09 12 004 3113 for HCS®* fibre 09 12 004 3116	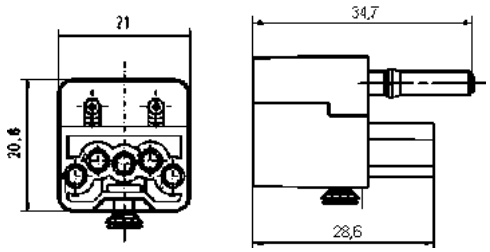 View from termination side	
Device side F.O. (f) + Han D® (m)	for POF 09 12 004 2611 for POF crimpless 09 12 004 2611 for HCS®* fibre 09 12 004 2611	for POF 09 12 004 3011 for POF crimpless 09 12 004 3011 for HCS®* fibre 09 12 004 3011	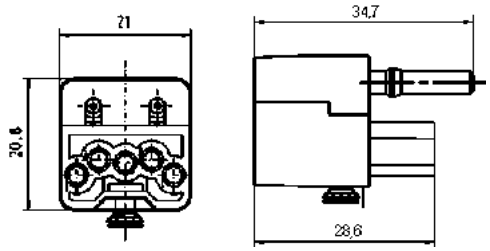 View from termination side	
Cable side F.O. (m) + Han D® (m)	Also available as single part for POF 09 12 004 2601 for POF crimpless **09 12 004 2603** for HCS®* fibre 09 12 004 2606	Also available as single part for POF 09 12 004 3001 for POF crimpless 09 12 004 3003 for HCS®* fibre **09 12 004 3006**	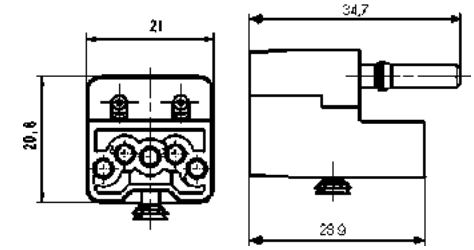 View from termination side	
Device side F.O. (f) + Han D® (f)	for POF 09 12 004 2701 for POF crimpless 09 12 004 2701 for HCS®* fibre 09 12 004 2701	for POF 09 12 004 3101 for POF crimpless 09 12 004 3101 for HCS®* fibre 09 12 004 3101	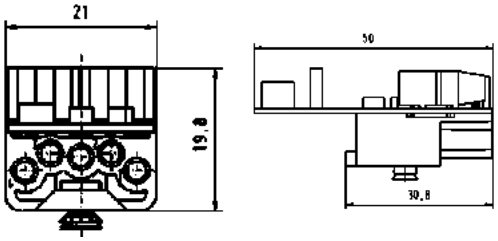 View from termination side	

* HCS®=Hard Clad Silica (is registered trade mark of the SpecTran Corporation)

Stock items in bold type

Han-Brid® Quintax 3 A 50 V 10 A

4 contacts + shielding
+ 2 power contacts
suitable in Han® 3 A metric
hoods and housings

Identification	Part number Male insert (M)	Part number Female insert (F)	Drawing	Dimensions in mm
Quintax insert	**09 15 003 3001**	**09 15 003 3101**	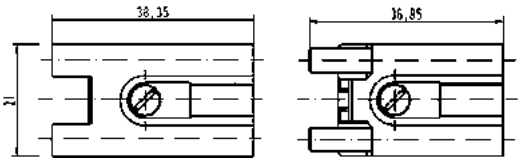	
Quintax contacts Zinc alloy Order crimp contacts separately Special clamp for cable diameter 3 - 6 and 6 - 9.5 mm included in delivery range	**09 15 004 3013**	**09 15 004 3113**	M 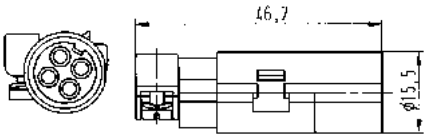 F 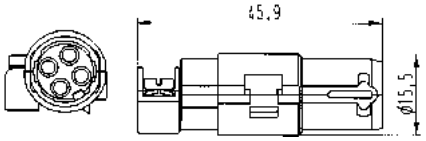	

Assembly instructions

Quintax-Z-contact

1. Strip cable acc. to drawing 1 and fold the shielding over the cable.
2. Crimp Han D® contacts onto the wires.

1. 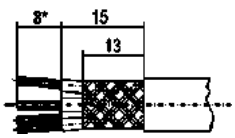

2. 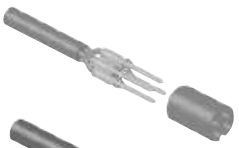

3. Insert Han D® contacts into corresponding cavaties of insulator until they are snapped in.

3. 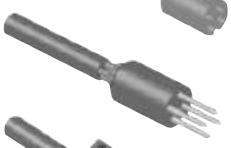

4. Fit the insert including the cable into the opened shielded bushing. The coding pin of the shielded bushing has to meet the groove of the insulator.

4. 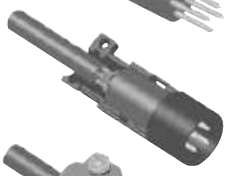

5. Clamp the tilt over the shielding onto the cable by means of the special clamp (small opening for cable diameter of 3 - 6 mm, large opening for cable diameter of 6 - 9.5 mm).

5.

6. Check the wiring.

7. Close the shielded bushing with the cover and insert it into the corresponding cavity of the Quintax Module as usual.

6.

Stock items in bold type

Hybrid network connector
+ 2 electrical contacts 10 A

Identification		Part number	Drawing	Dimensions in mm
Han-Brid® RJ45 C with RJ Industrial		**09 12 003 3011**	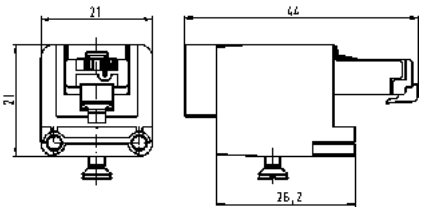	
Han-Brid® RJ45 C with Stewart RJ45		**09 12 003 3021**	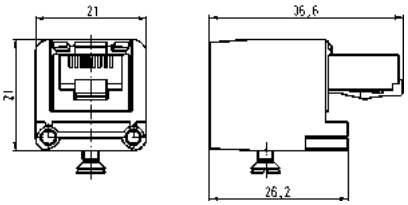	
Han-Brid® RJ45 C with HIROSE RJ45		**09 12 003 3031**	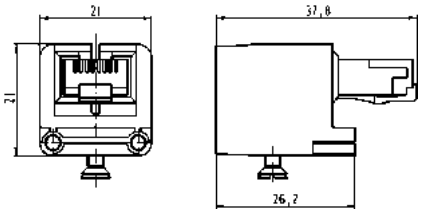	
Panel feed-through straight		**09 12 003 2774**	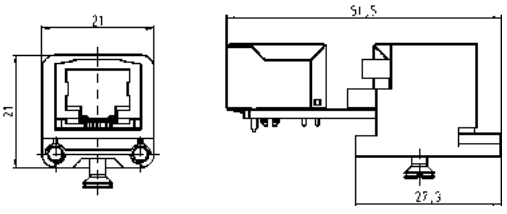	
Panel feed-through angled		**09 12 003 2776**	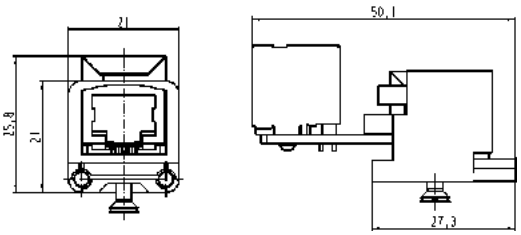	
Panel feed-through with 4-pole terminal block		**09 12 003 2770**	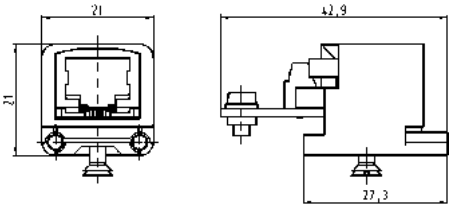	

Stock items in bold type

Han-Brid® USB

Features

- Insert for all Han® 3 A hoods and housings
- Hood with glued sealing
- Simple and low-cost termination via insert of a patch cable
- Strain-relief via cable tie

Technical characteristics

USB style A, 2.0 Standard

Specifications	DIN VDE 0110 DIN EN 61984
Number of contacts	4
Electrical data acc. to EN 61984	**1 A 50 V 0.8 kV 3**
Rated current	1 A
Rated voltage	50 V
Rated impulse voltage	0.8 kV
Pollution degree	3
Material	Polycarbonate
Insulation resistance	≥ 10^{10} Ω
Contact resistance	≥ 4 mΩ
Temperature range	-40 °C ... 85 °C
Flammability acc. to UL 94	V0
Mechanical working life - mating cycles	≥ 500

Han-Brid® FireWire

Features

- Insert for all Han® 3 A hoods and housings
- Hood with glued sealing
- Simple and low-cost termination via insert of a patch cable
- Strain-relief via cable tie
- Compatible to IEEE 1394

Technical characteristics

Firewire IEEE 1394

Specifications	DIN VDE 0110 DIN EN 61984
Number of contacts	6
Electrical data acc. to EN 61984	**1 A 50 V 0.8 kV 3**
Rated current	1 A
Rated voltage	50 V
Rated impulse voltage	0.8 kV
Pollution degree	3
Material	Polycarbonate
Insulation resistance	≥ 10^{10} Ω
Contact resistance	≥ 4 mΩ
Temperature range	-40 °C ... 85 °C
Flammability acc. to UL 94	V0
Mechanical working life - mating cycles	≥ 500

Han-Brid® USB / Han-Brid® FireWire 50 V 1 A

Identification	Part number Male insert (M)	Part number Female insert (F)	Drawing	Dimensions in mm
Han-Brid® USB	**09 12 001 2794**	**09 12 001 3091**	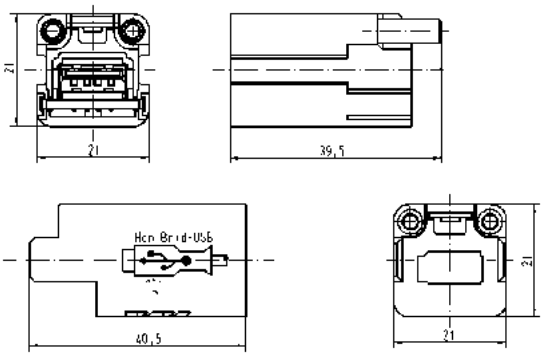	
Han-Brid® FireWire	**09 12 001 2774**	**09 12 001 3071**	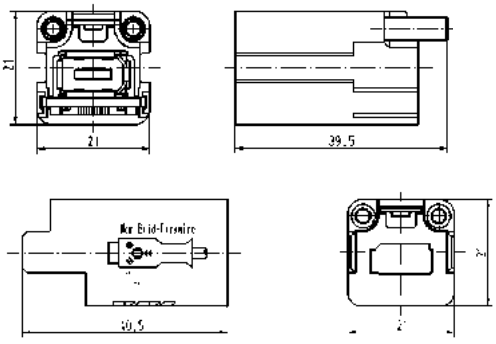	

Stock items in bold type

Han® Q 5/0 inserts with PCB-adapter

230/400 V 16 A

Device side

Insert	Part number Male insert (M)	Part number Female insert (F)	Drawing	Dimensions in mm
Order contacts separately	**09 12 005 3001**	**09 12 005 3101**	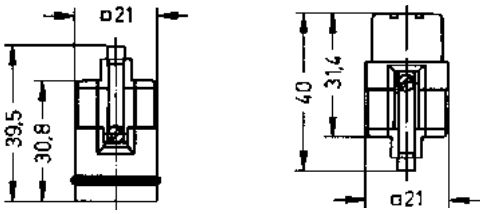	

[1] Distance for contact max. 21 mm

PCB-adapter	Part number	Drawing	Dimensions in mm
with PE contact panel for Han® Q 5/0 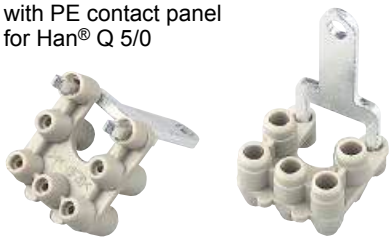	09 12 000 9905	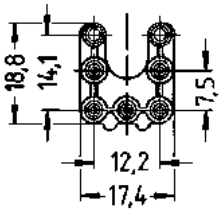 Adapter	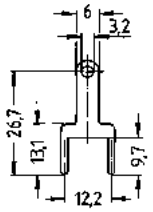 PE contact panel

Solder contacts	Part number Male contact	Part number Female contact	Drawing	Dimensions in mm
to connect the PCB-adapter	09 33 000 6195	09 33 000 6295	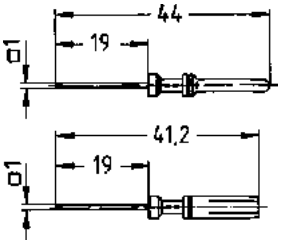	

Housing bulkead mounting	Part number	Drawing	Dimensions in mm
	09 62 003 0304	Panel cut out 22 x 22 mm 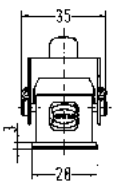 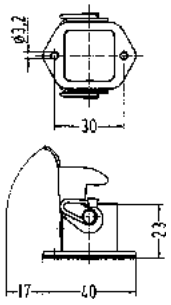	

Cable side

Further informations see HARTING catalogue "Industrial Connectors Han®, chapter Q"

Stock items in bold type

Han® Q 5/0 with PCB-adapter

Features

- ❏ Robust design
- ❏ Suitable for EMC housings
- ❏ Low wiring costs
- ❏ Additional robust and secure PE-connection between housing and PCB

Technical characteristics

Approvals	
Inserts	
Number of contacts	5
Electrical data acc. to DIN EN 61984	**10 A 230/400 V 4 kV 3**
Working current	
Working voltage conductor – ground	
Working voltage conductor – conductor	
Rated impulse voltage	
Pollution degree	
- pollution degree 2 also	10 A 320/500 V 4 kV 2
Working voltage acc. to UL/CSA	400 V
Insulation resistance	≥ 10^{10} Ω
Material	Polycarbonate
Limiting temperatures	-40 °C … +125 °C
Flammability acc. to UL 94	V0
Mechanical working life	
- Mating cycles	≥ 500

Layout of printed circuit boards

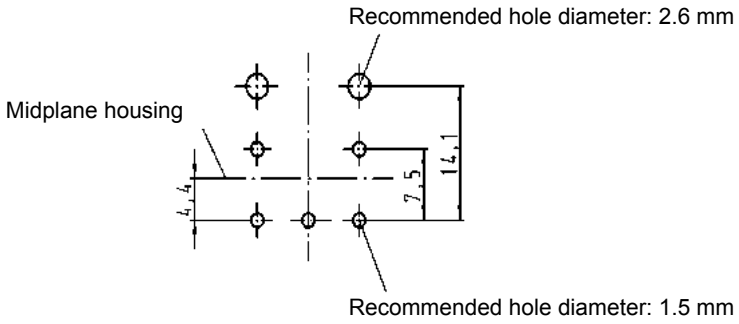

Assembly situation

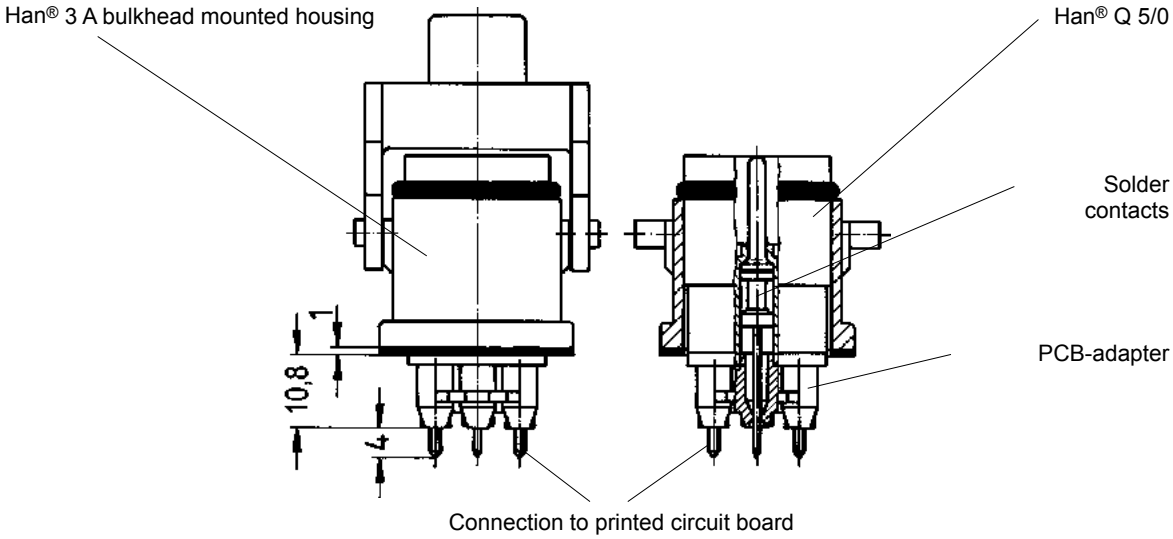

Han® Q 7/0 inserts with PCB-adapter

250 V 7.5 A

Device side

Insert	Part number Male insert (M)	Part number Female insert (F)	Drawing	Dimensions in mm
Order contacts separately	**09 12 007 3001**	**09 12 007 3101**	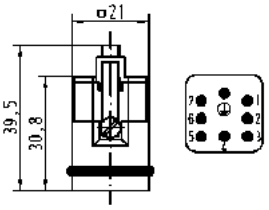	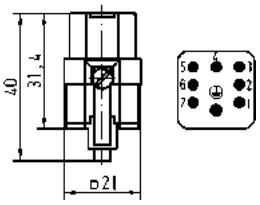
Coding	**09 12 000 9901**	**09 12 000 9902**		

PCB-adapter	Part number	Drawing	Dimensions in mm
for PCB up to 2.4 mm 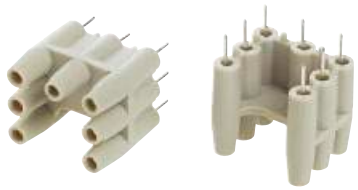	09 12 000 9908	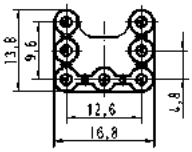	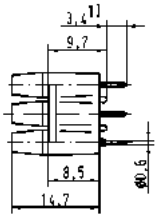

Solder contacts	Part number Male contact	Part number Female contact	Drawing	Dimensions in mm
to connect the PCB-adapter	09 15 000 6190	09 15 000 6290	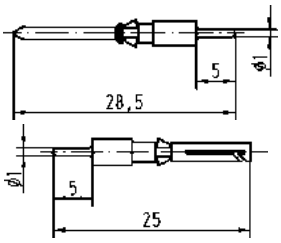	

Housing bulkead mounting	Part number	Drawing	Dimensions in mm
	09 20 003 0301	Panel cut out 22 x 22 mm 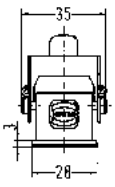 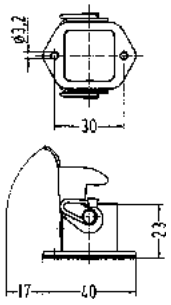	

Cable side

Further informations see HARTING catalogue "Industrial Connectors Han®, chapter Q"

Stock items in bold type

Han® Q 7/0 with PCB-adapter

Features

- ❏ Robust design
- ❏ Suitable for standard and EMC housings
- ❏ Low cost wiring
- ❏ High contact density

Technical characteristics

Approvals	
Inserts	
Number of contacts	7
Electrical data acc. to DIN EN 61984	**7.5 A 250 V 4 kV 3**
Working current	
Working voltage	
Rated impulse voltage	
Pollution degree	
Insulation resistance	≥ 10^{10} Ω
Material	Polycarbonate
Limiting temperatures	-40 °C … +125 °C
Flammability acc. to UL 94	V0
Mechanical working life - Mating cycles	≥ 500

Layout of printed circuit boards

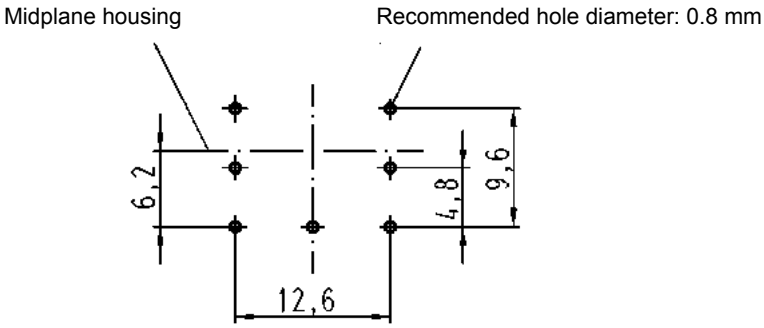

Assembly situation

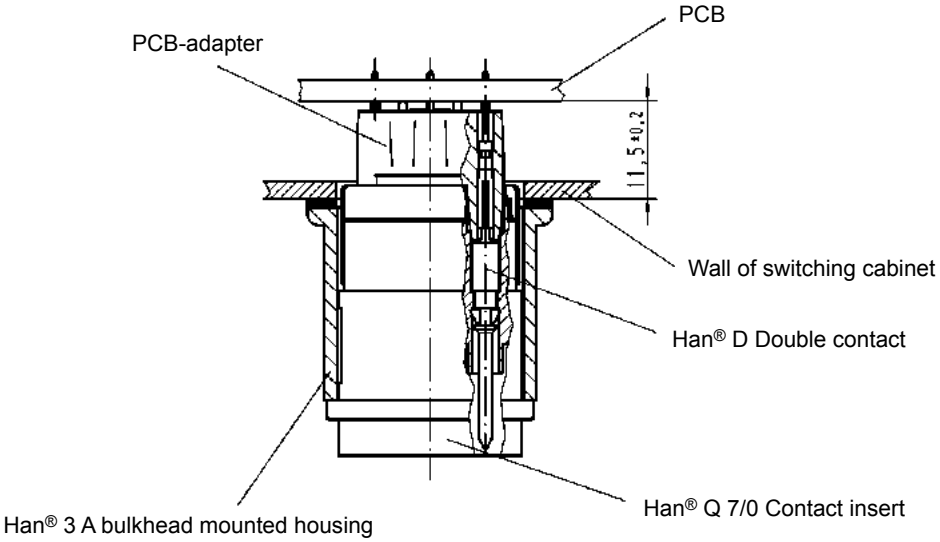

Hoods/Housings metal

Size 3 A

Identification		Part number	M	Drawing	Dimensions in mm
Hoods	Hood side-entry	**19 20 003 1640**	20	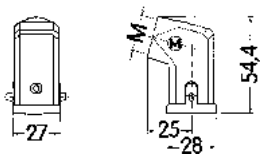	
	Hood top-entry	**19 20 003 1440**	20	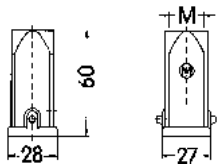	
	Protection covers for hoods	**09 20 003 5422**[1] **09 20 003 5421**[2]			
Housings	Housings bulkhead mounting	**09 20 003 0301**		Panel cut out 22 x 22 mm 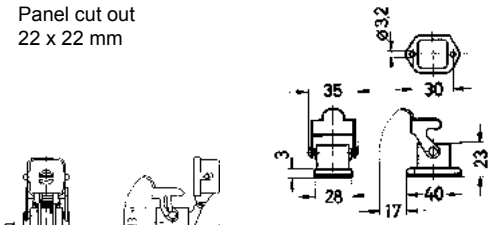	
	with fixed cover without sealing	**09 20 003 0305**[1]		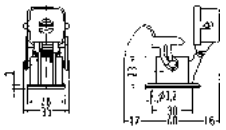	
	with fixed cover with sealing	**09 20 003 0306**[2]			
		09 20 003 0801		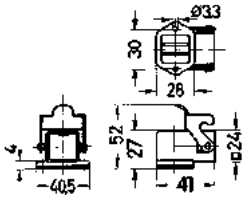	
	Housing surface mounting 1 side-entry	**19 20 003 1250**	20	Panel cut out 22 x 22 mm 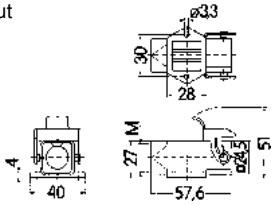	
	bottom closed	**19 20 003 1252**	20		
	Housing screw mounting	**19 20 003 1150**	20	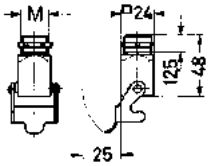	
	Hood cable to cable	**19 20 003 1750**	20	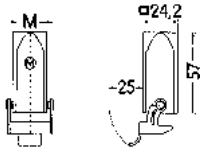	
	Protection covers for housings	**09 20 003 5426**[1] **09 20 003 5425**[2]		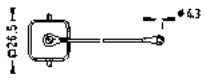	
	for hoods cable to cable	09 20 003 5428[1] **09 20 003 5427**[2]			

[1] for mounted male insert
[2] for mounted female insert

Stock items in bold type

Identification		Part number	M	Drawing	Dimensions in mm
Hoods	Hoods side-entry	grey 19 20 003 0620 black 19 20 003 0627	20 20	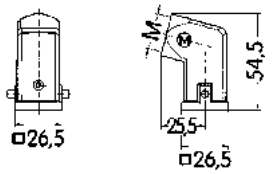	
	Hoods top-entry	grey **19 20 003 0420** black 19 20 003 0427	20 20	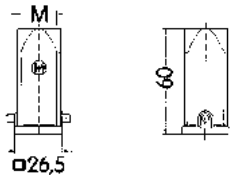	
	Protection covers for hoods	09 20 003 5442[1] 09 20 003 5441[2]		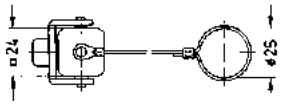	
Housings	Housings bulkhead mounting	grey **09 20 003 0320** black **09 20 003 0327** grey **09 20 003 0820** black **09 20 003 0827**	– – – –	Panel cut out 22 x 22 mm 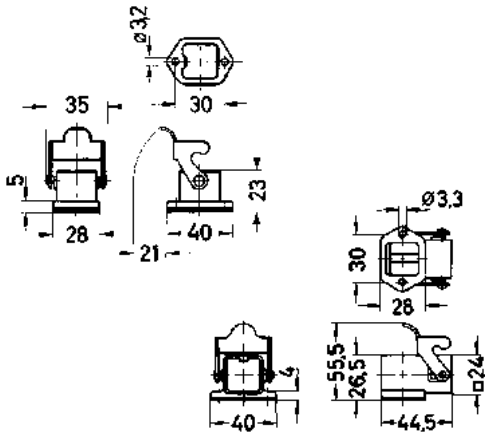	
	Housings surface mounting 1 side-entry	grey **19 20 003 0220** black **19 20 003 0227**	20 20	Panel cut out 22 x 22 mm 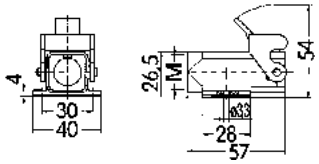	
	Hoods cable to cable	grey **19 20 003 0720** black 19 20 003 0727	20 20	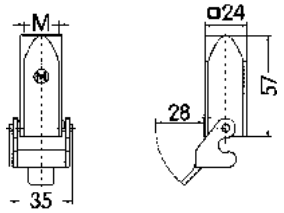	
	Protection covers for housings A B for hoods cable to cable C	09 20 003 5407[1][3] **09 20 003 5408**[2][3] **09 20 003 5445**[2] 09 20 003 5446[1] 09 20 003 5447[2][3] 09 20 003 5448[1] 09 20 003 5449[2]		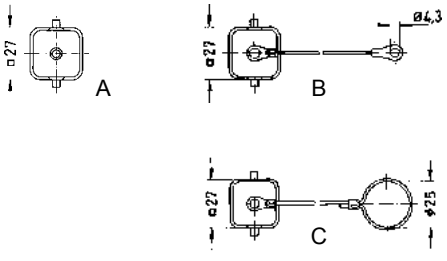	

[1] for mounted male insert
[2] for mounted female or Han-Brid® insert
[3] for metal housings and cable to cable hoods also

Stock items in bold type

Han® Q 4/2 inserts with PCB-adapter

230/400 V 16 A

Device side

Insert	Part number Male insert (M)	Part number Female insert (F)	Drawing	Dimensions in mm
Order contacts separately	**09 12 006 3041**	**09 12 006 3141**	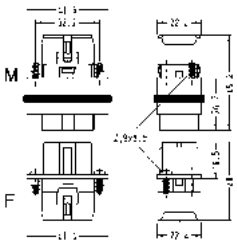	Contact arrangement View from termination side 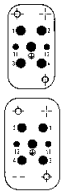

PCB-adapter	Part number	Drawing	Dimensions in mm
for PCBs up to 2.4 mm	09 12 006 9901	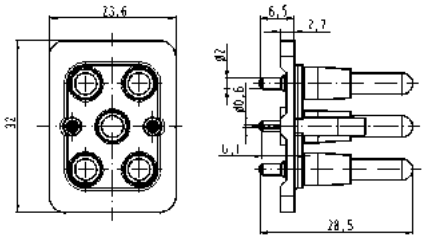	

Han® Q 4/2 double contacts	Part number Male contact	Part number Female contact	Drawing	Dimensions in mm
to connect the PCB adapter Power contact	09 32 000 6180	09 32 000 6280	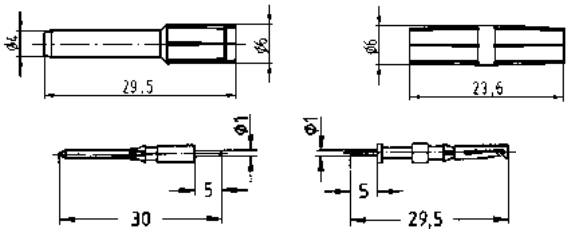	
Signal contact	09 15 000 6191	09 15 000 6293		

Housing bulkead mounting	Part number	Drawing	Dimensions in mm
Plastic	09 12 008 0327	Panel cut out 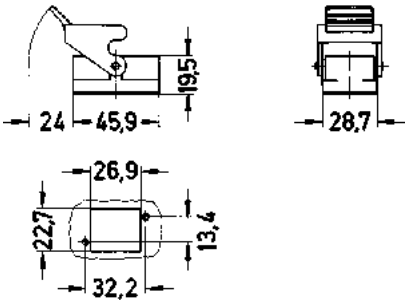	

Cable side

Further informations see HARTING catalogue "Industrial Connectors Han®, chapter Q"

Stock items in bold type

Han® Q 4/2 with PCB-adapter

Features

- ❏ Robust Design
- ❏ Suitable for Han-Compact® hoods and housings
- ❏ Low wiring costs
- ❏ High contact density

Technical characteristics

Approvals	
Number of contacts	4/2 + PE
Electrical data acc. to DIN EN 61 984	
Power area	30 A 400/690 V 6 kV 2
Rated current	30 A
Rated voltage	
conductor - ground	400 V
conductor - conductor	690 V
Rated impulse voltage	6 kV
Pollution degree	2
Signal area	7.5 A 250 V 4 kV 2
Rated current	7.5 A
Rated voltage	250 V
Rated impulse voltage	4 kV
Pollution degree	2
Insulation resistance	≥ 10^{10} Ω
Material	LCP
Limiting temperatures	-40 °C ... +125 °C
Flammability acc. to UL 94	V0
Mechanical working life	≥ 500 mating cycles

Layout of printed circuit boards

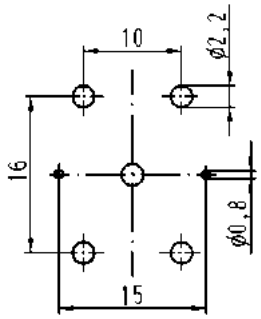

Assembly situation

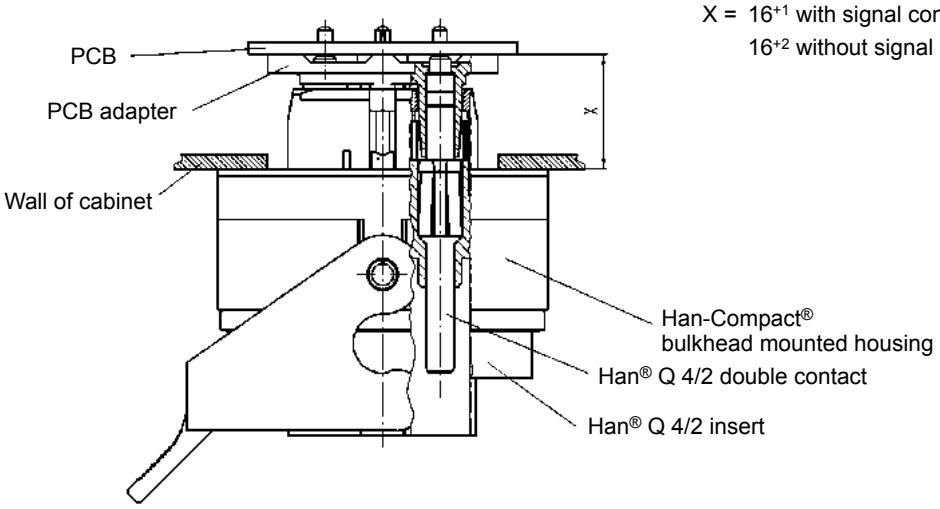

X = 16^{+1} with signal contact
16^{+2} without signal contact

Han® Q 8/0 inserts with PCB-adapter

230/400 V 16 A

Device side

Insert	Part number Male insert (M)	Part number Female insert (F)	Drawing	Dimensions in mm
Order contacts separately	**09 12 008 3001**	**09 12 008 3101**	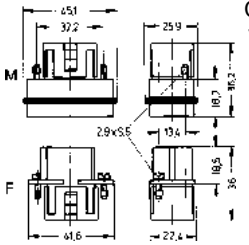 Contact arrangement View from termination side	

PCB-adapter	Part number	Drawing	Dimensions in mm
for PCBs up to 1.6 mm	09 12 008 9901	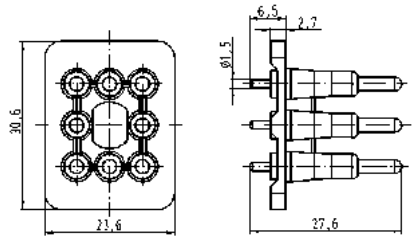	

Han® Q 8/0 double contacts	Part number Male contact	Part number Female contact	Drawing	Dimensions in mm
to connect the PCB adapter	09 33 000 6180	09 33 000 6280	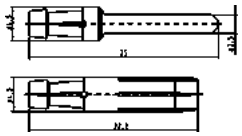	

Housing bulkead mounting	Part number	Drawing	Dimensions in mm
Plastic	09 12 008 0327	Panel cut out 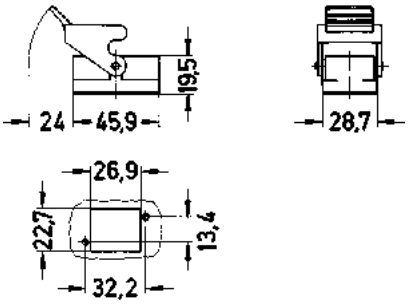	

Cable side

Further informations see HARTING catalogue "Industrial Connectors Han®, chapter Q"

Stock items in bold type

Han® Q 8/0 with PCB-adapter

Features

- ❏ Robust Design
- ❏ Suitable for Han-Compact® hoods and housings
- ❏ Low wiring costs
- ❏ High contact density

Technical characteristics

Approvals	,
Number of contacts	8
Electrical data acc. to DIN EN 61 984	16 A 230/400 V 4 kV 2
Rated current	16 A
Rated voltage	
conductor - ground	230 V
conductor - conductor	400 V
Rated impulse voltage	4 kV
Pollution degree	2
Insulation resistance	≥ 10^{10} Ω
Material	LCP
Limiting temperatures	-40 °C ... +125 °C
Flammability acc. to UL 94	V0
Mechanical working life	≥ 500 mating cycles

Layout of printed circuit boards

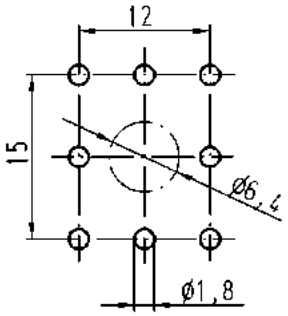

Assembly situation

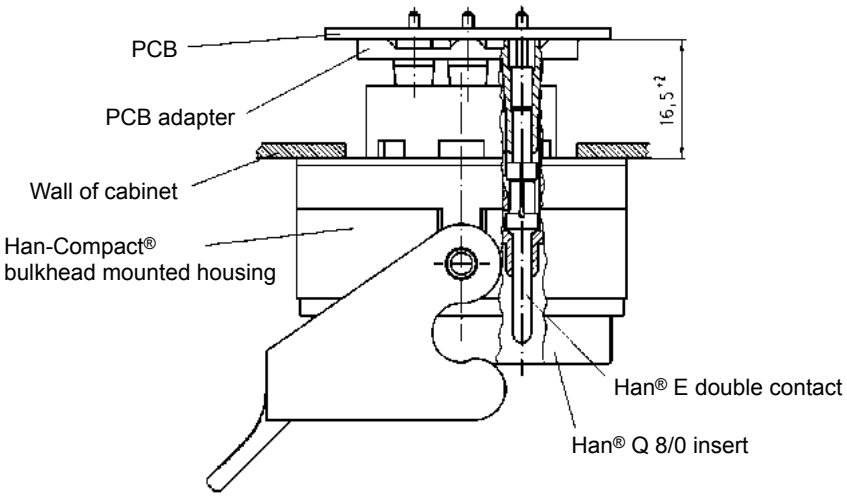

thermoplastic / metal

Identification		Part number		Drawing	Dimensions in mm
Hoods					
Hoods Thermoplastic side-entry Cable gland order separately		**09 12 008 0527**	Pg 16	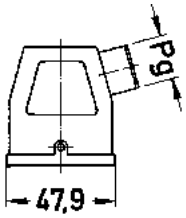	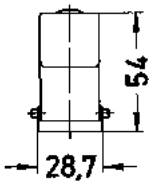
Hoods Thermoplastic top-entry Cable gland order separately		**19 12 008 0429** **09 12 008 0427** **09 12 008 0429**	M 25 Pg 16 Pg 21	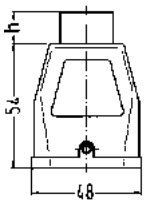	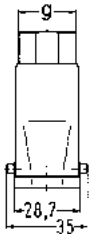
Hoods Thermoplastic top-entry Cable gland order separately		09 12 008 0428	Pg 16	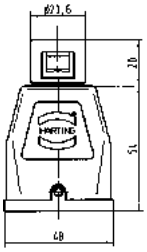	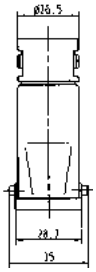
Cable seal Thermoplastic for hoods Thrust bolt and insert		**09 00 000 5059** **19 12 000 5157** **19 12 000 5158** **09 00 000 5157** **09 00 000 5158**	Pg 16 M 25 M 25 Pg 21 Pg 21	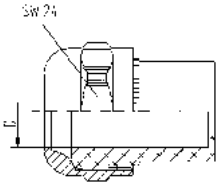	

h	g
14	M 25x1.5
13	Pg 16
13	Pg 21

	cable	
	min.	max.
09 00 000 5059	11.5 mm	15.5 mm
19 12 000 5157	10.5 mm	14 mm
19 12 000 5158	14 mm	17 mm
09 00 000 5157	14 mm	18 mm
09 00 000 5158	17 mm	20.5 mm

Stock items in bold type

thermoplastic / metal

Identification		Part number		Drawing	Dimensions in mm
Hoods					
Hoods Metal side-entry Cable gland order separately		**19 12 008 0526**	M 25	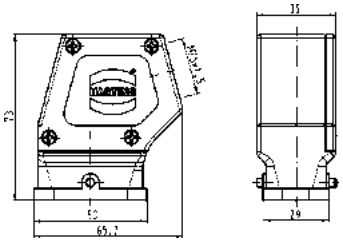	
Hoods Metal side-entry Cable gland order separately		black chromated 19 12 008 0501 black powder coated 19 12 708 0501 matt nickel plated 19 12 008 0502	M 25 M 25 M 25	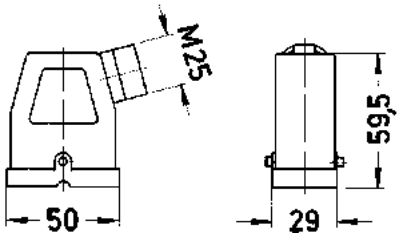	
Hoods Metal top-entry Cable gland order separately		**19 12 008 0426**	M 25	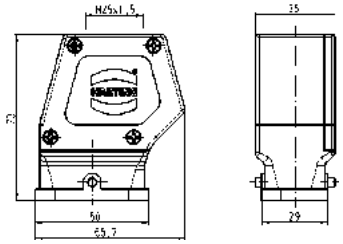	
Cable seal Metal for hoods Thrust bolt and insert		19 12 000 5057 **19 12 000 5058**	M 25 M 25	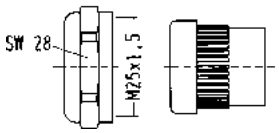	

	cable	
	min.	max.
19 12 000 5057	10.5 mm	14 mm
19 12 000 5058	14 mm	17 mm

Identification	Part number for male insert	Part number for female insert	Drawing	Dimensions in mm
Protection covers Thermoplastic for male insert	without sealing 09 12 008 5407	with sealing 09 12 008 5408	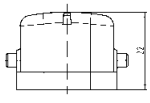	

Han

Stock items in bold type

thermoplastic / metal

Identification	Part number		Drawing	Dimensions in mm
Housings				
Housings, bulkhead mounting Thermoplastic angled	**09 12 008 0902**	Pg 16	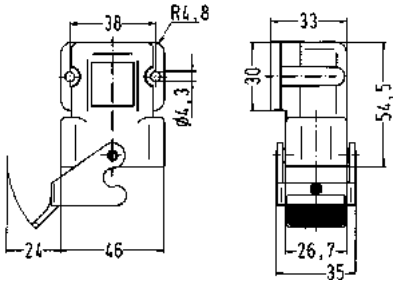	
Housings, bulkhead mounting Thermoplastic	**09 12 008 0327**	Pg 16	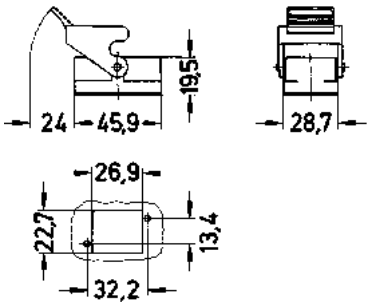	
Gasket for housings bulkhead mounting Han® Q 8/0	09 12 000 9912		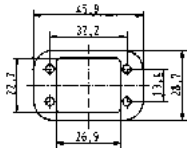	
Housings, surface mounting Thermoplastic angled Cable gland order separately	09 12 008 0901	Pg 16	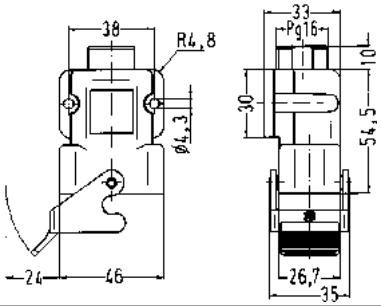	
Hoods, cable to cable Thermoplastic Cable gland order separately	09 12 008 0727 19 12 008 0729	Pg 16 M 25	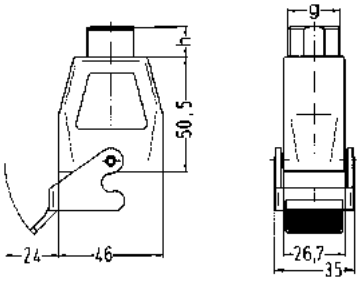	

h	g
13	Pg 16
14	M 25x1.5

Stock items in bold type

thermoplastic / metal

Identification	Part number		Drawing	Dimensions in mm
Housings				
Cable seal Thermoplastic for housings Thrust bolt and insert	09 00 000 5058	Pg 16	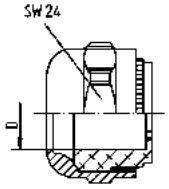	

	cable	
	min.	max.
09 00 000 5058	11.5 mm	15.5 mm

Housings, bulkhead mounting Metal	black chromated **09 12 008 0301** black powder coated **09 12 708 0301** matt nickel plated **09 12 008 0303**		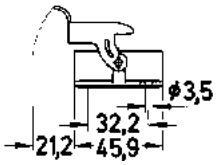 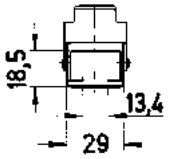	

Stock items in bold type

Han DD® inserts with PCB-adapter

250 V 7.5 A

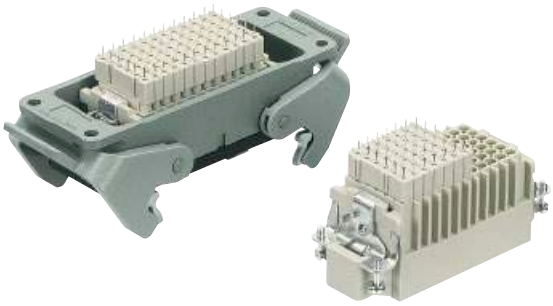

Han

Device side

Insert

Insert	Size	Part number Male insert (M)	Part number Female insert (F)
Order contacts separately			
Han® 24 DD	6 B	**09 16 024 3001**	**09 16 024 3101**
Han® 42 DD	10 B	**09 16 042 3001**	**09 16 042 3101**
Han® 72 DD	16 B	**09 16 072 3001**	**09 16 072 3101**
Han® 108 DD	24 B	**09 16 108 3001**	**09 16 108 3101**

Drawing

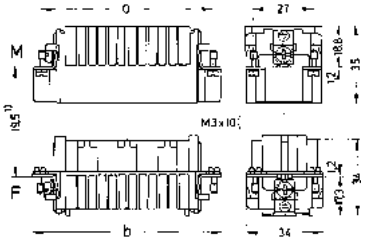

Dimensions in mm

1) Distance for contact max. 21 mm

	a	b
24 DD	44	51
42 DD	57	64
72 DD	77.5	84.5
108 DD	104	111

Han DD® double contacts

Han DD® double contacts	Part number Male contacts	Part number Female contacts
to connect the PCB-adapter	09 15 000 6191	**09 15 000 6291**

Drawing

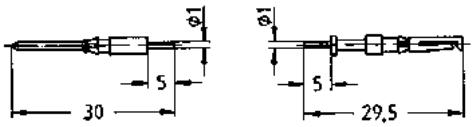

Dimensions in mm

PCB adapter

PCB adapter	Part number
for PCBs up to 1.6 mm	**09 16 000 9905**
for PCBs up to 2.4 mm	**09 16 000 9908**

Drawing

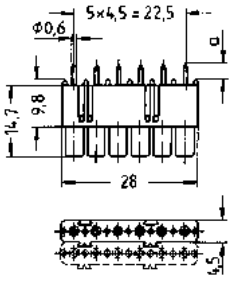

Dimensions in mm

	a
09 16 000 9905	2.6
09 16 000 9908	3.4

Housing

Housing	Size	Part number
	6 B	**09 30 006 0301**
	10 B	**09 30 010 0301**
	16 B	**09 30 016 0301**
	24 B	**09 30 024 0301**

Drawing

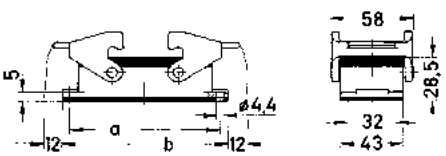

Dimensions in mm

Size	a	b	Panel cut out
6 B	70	80	48 x 35
10 B	83	93	60 x 35
16 B	103	113	82 x 35
24 B	130	140	108 x 35

Size 6 B with 1 locking lever

Cable side

Further informations see HARTING catalogue "Industrial Connectors Han®, chapter DD"

Stock items in bold type

Features

- ❏ Robust design
- ❏ Suitable for standard and EMC housing
- ❏ Low wiring costs
- ❏ Higher contact density

Technical characteristics

Approvals	c UL us
Inserts	
Number of contacts	24, 42, 72, 108
Electrical data acc. to DIN VDE 0627	**7.5 A 250 V 4 kV 3**
Working current	
Working voltage	
Rated impulse voltage	
Pollution degree	
Working voltage acc. to UL	250 V
Testing voltage U_{rms}	2 kV
Insulation resistance	≥ 10^{10} Ω
Material	Polyamide
Limiting temperatures	-40 °C / +125 °C
Flammability acc. to UL 94	HB
Mechanical working life - Mating cycles	≥ 500
Wire gauge	0.14 - 2.5 mm²

Layout of printed circuit boards

Han® 24 DD

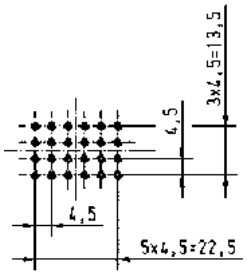

Han® 42 DD

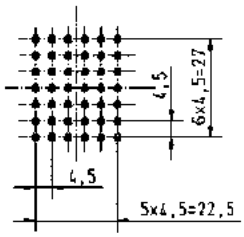

Han® 72 DD

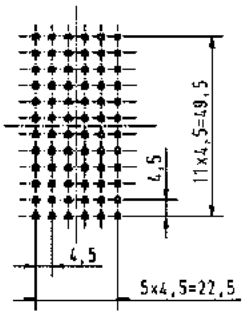

Han® 108 DD

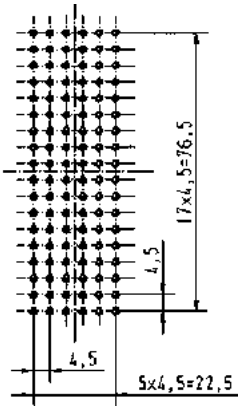

Recommended hole diameter: 0.8 mm

Assembly situation

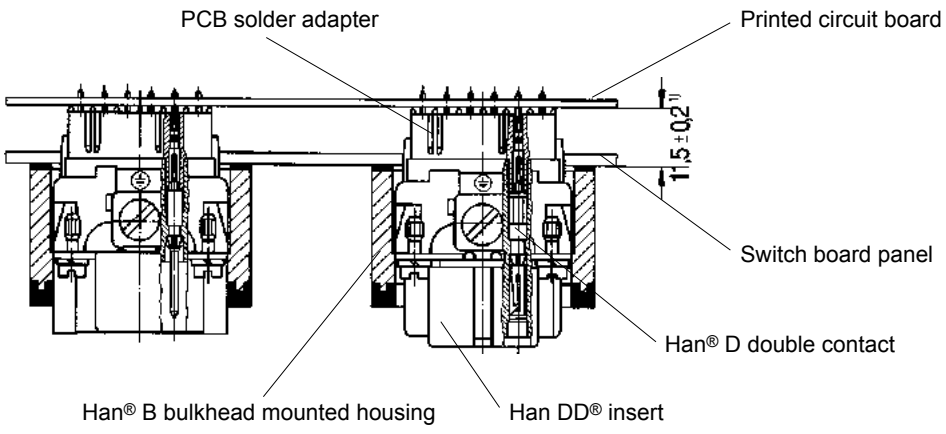

1) for Han® B EMC hoods/housings spacing of 12.5 ± 0.2 is necessary as no flange seal is used.

Han E® inserts with PCB-adapter

500 V 16 A

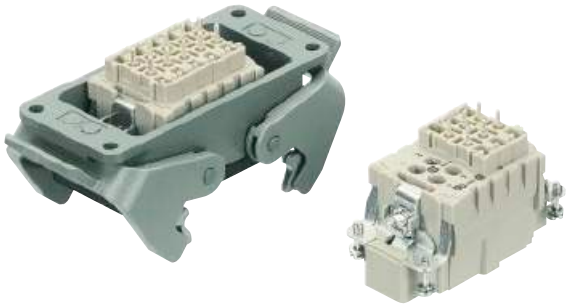

Device side

Inserts

Size	Part number Male insert (M)	Part number Female insert (F)
Order contacts separately		
Han® 6 E — 6 B	**09 33 006 2602**	**09 33 006 2702**
Han® 10 E — 10 B	**09 33 010 2602**	**09 33 010 2702**
Han® 16 E — 16 B	**09 33 016 2602**	**09 33 016 2702**
Han® 24 E — 24 B	**09 33 024 2602**	**09 33 024 2702**

Drawing

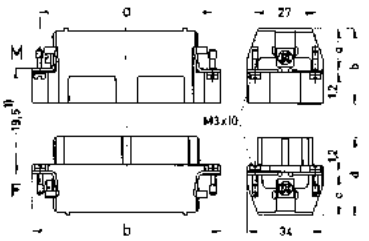

Dimensions in mm

1) Distance for contact max. 21 mm

	a	b
6 E	44	51
10 E	57	64
16 E	77.5	84.5
24 E	104	111

Han E® double contacts

Part number Male contacts	Part number Female contacts
09 33 000 6180	09 33 000 6280

to connect the PCB-adapter

Drawing

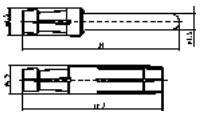

Dimensions in mm

PCB adapter

Part number: 09 33 000 9996

Drawing

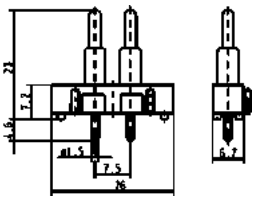

Dimensions in mm

Housing

Size	Part number
6 B	**09 30 006 0301**
10 B	**09 30 010 0301**
16 B	**09 30 016 0301**
24 B	**09 30 024 0301**

Drawing

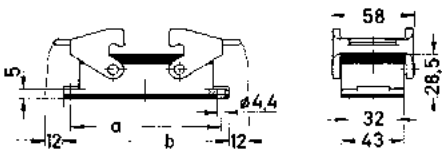

Size	a	b	Panel cut out
6 B	70	80	48 x 35
10 B	83	93	60 x 35
16 B	103	113	82 x 35
24 B	130	140	108 x 35

Size 6 B with 1 locking lever

Cable side

Further informations see HARTING catalogue "Industrial Connectors Han®, chapter E"

Stock items in bold type

Han E® with PCB-adapter

Features

- ❏ Robust design
- ❏ Suitable for standard and EMC housings
- ❏ Low wiring costs
- ❏ Counter connector available with screw, crimp or cage clamp termination

Technical characteristics

Inserts

Number of contacts	6, 10, 16, 24
Electrical data acc. to DIN EN 61984	**16 A 500 V 6 kV 3**
Working current	
Working voltage	
Rated impulse voltage	
Pollution degree	
Insulation resistance	≥ 10^{10} Ω
Material	Polycarbonate
Limiting temperatures	-40 °C / +125 °C
Flammability acc. to UL 94	V0
Mechanical working life	
- Mating cycles	≥ 500
Wire gauge	0.5 - 4 mm²

Layout of printed circuit boards

Han® 6 E

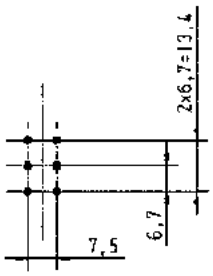

Han® 10 E

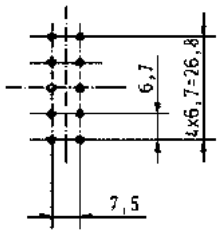

Han® 16 E

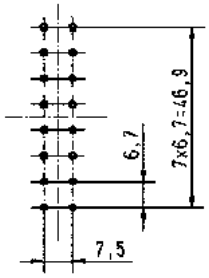

Han® 24 E

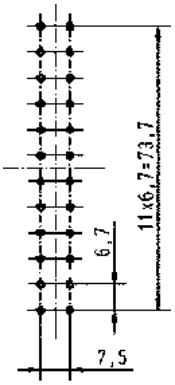

Recommended hole diameter: 1.8 mm

Assembly situation

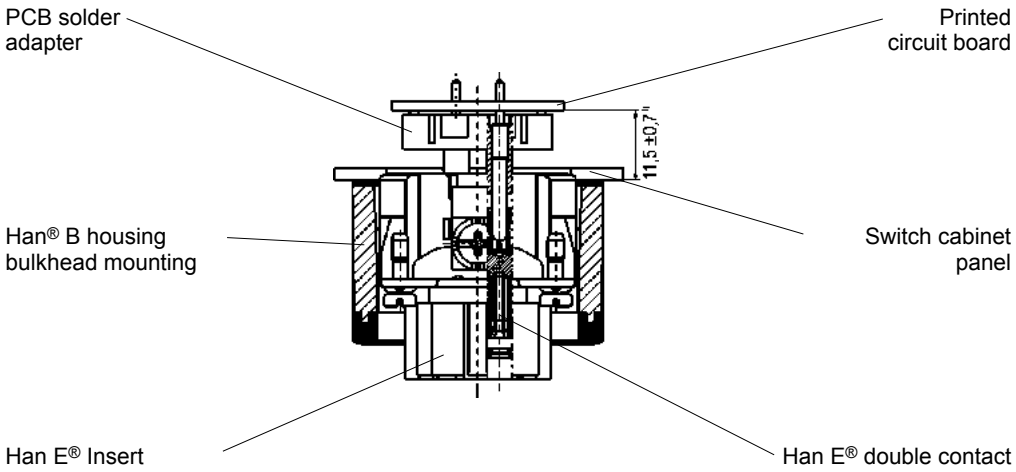

[1] for Han® B EMC hoods/housings spacing of 12.5 ± 0.7 is necessary as no flange seal is used

Hinged frame	No. of modules	Part number Male insert (M)	Part number Female insert (F)	Size	Figure
	1	**09 14 000 0304**	**09 14 000 0304**	10 A	Drawings and further details see HARTING catalogue “Industrial Connectors Han®, chapter 06”.
	2	**09 14 006 0303**	**09 14 006 0313**	6 B	
	3	**09 14 010 0303**	**09 14 010 0313**	10 B	
	4	**09 14 016 0303**	**09 14 016 0313**	16 B	
	6	**09 14 024 0303**	**09 14 024 0313**	24 B	

Identification	Part number Male insert (M)	Part number Female insert (F)	Drawing	Dimensions in mm
Han DD® module PCB termination/ crimp termination 	**09 14 012 3001**	**09 14 012 3101**	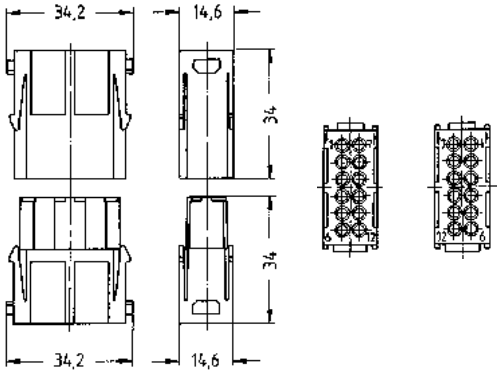	
Han D® double contacts to connect the PCB 	09 15 000 6191	**09 15 000 6291**	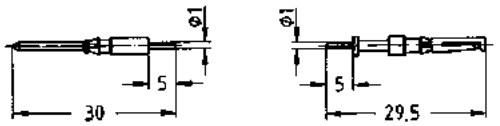	
PCB adapter for PCBs up to 1.6 mm for PCBs up to 2.4 mm 	**09 16 000 9905** **09 16 000 9908**		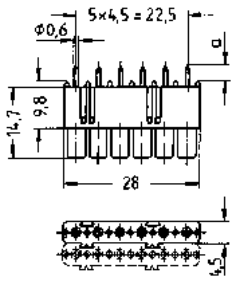	

	a
09 16 000 9905	2.6
09 16 000 9908	3.4

Han® axial screw module	Part number Male insert (M)	Part number Female insert (F)	Drawing	Dimensions in mm
Axial screw termination Cable side	**09 14 002 2601**	**09 14 002 2701**		
PCB adaption Device side 	09 14 002 2603	09 14 002 2703	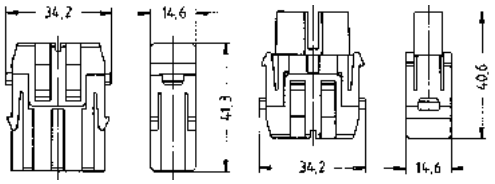	
Solder contact 	09 32 000 6295		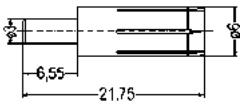	

Stock items in bold type

Features

- ❏ Modular assembly
- ❏ Robust design
- ❏ Suitable for standard and EMC housings
- ❏ Low wiring costs

Technical characteristics

Han DD® module with PCB-adaption

Number of contacts	12
Working current	7.5 A
Working voltage	250 V
Wire gauge	0.14 - 2.5 mm²

Han® axial screw module for PCB adaptions

Number of contacts	2
Working current	40 A
Working voltage	500 V
Wire gauge	2.5 - 10 mm²

Layout of printed circuit boards

Depiction

Recommended hole diameter: 0.8 mm

Recommended hole diameter: 3.2 mm

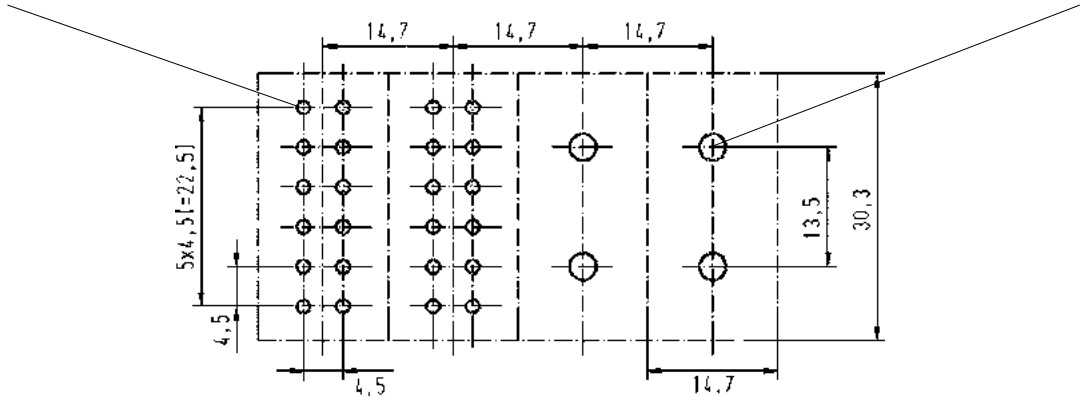

Han DD® module

Han® axial screw module 40 A

Assembly situation

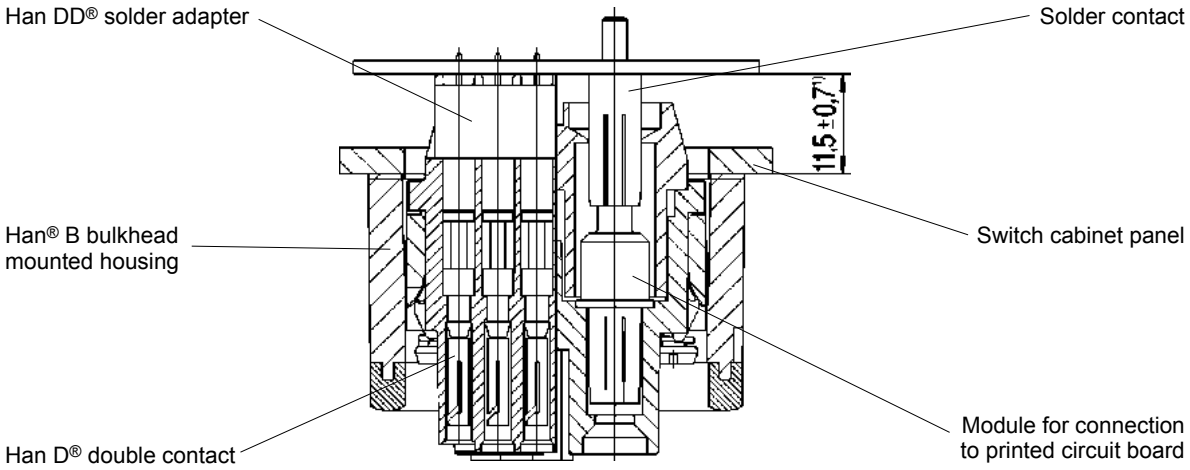

¹⁾ for Han® B EMC hoods/housings spacing of 12.5 ± 0.7 is necessary as no flange seal is used

- Secondary mating between industrial connector and printed circuit board.
- No higher force is applied on the soldering joint when mating the industrial connector due to an additional mating point.
- No wiring between printed circuit board and industrial connector necessary.
- thus no wiring faults
  ⇨ no testing, no costs
- Connecting times are minimized.
- Easy handling is time and cost saving.
- The production of mechanical and electrical / electronical components can be completely separated.
- Possibility to reach a higher degree of automation in the production (i. e. wave soldering of the PCBs).

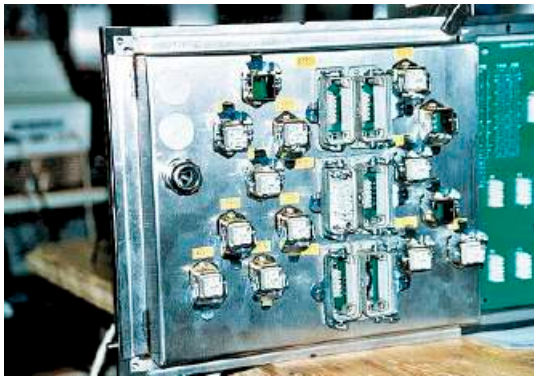

Han DD® and Han® Q 5/0 PCB-adapter
Wilhelm Fette GmbH, Germany

Han E® PCB-adapter

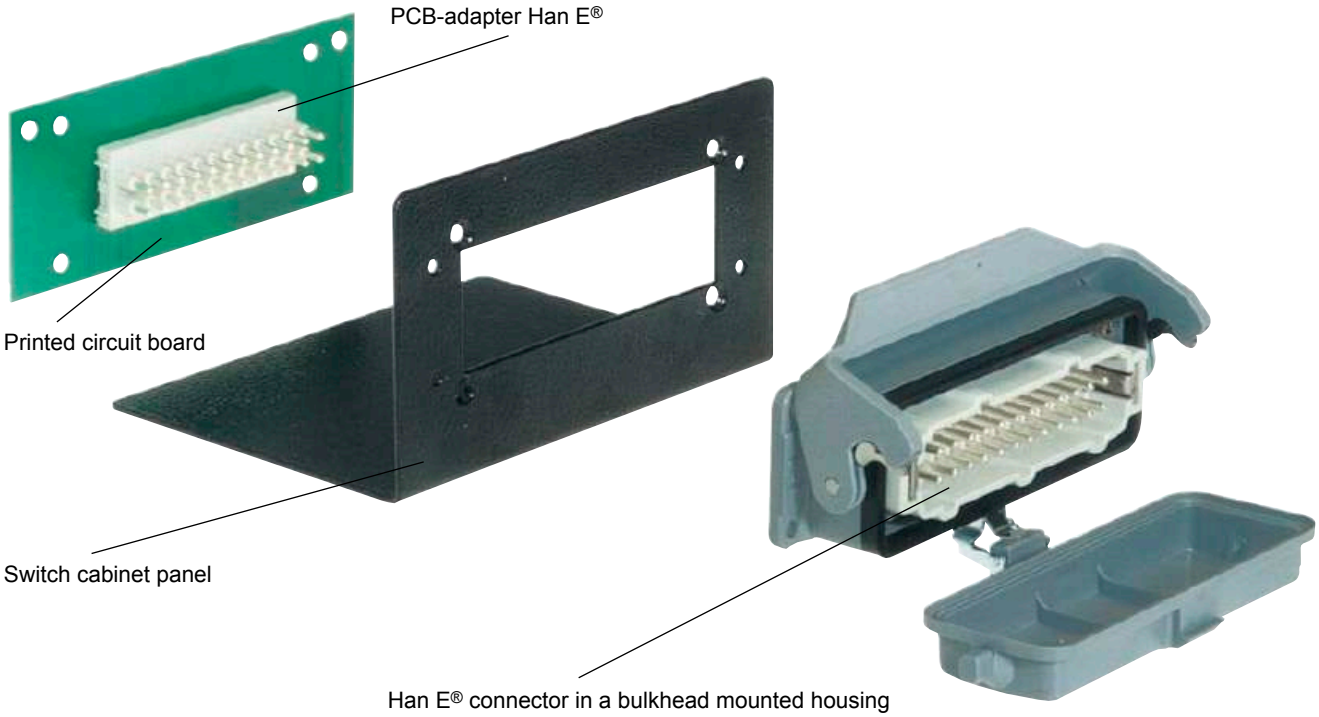

Notes

05. Subminiature D Connectors

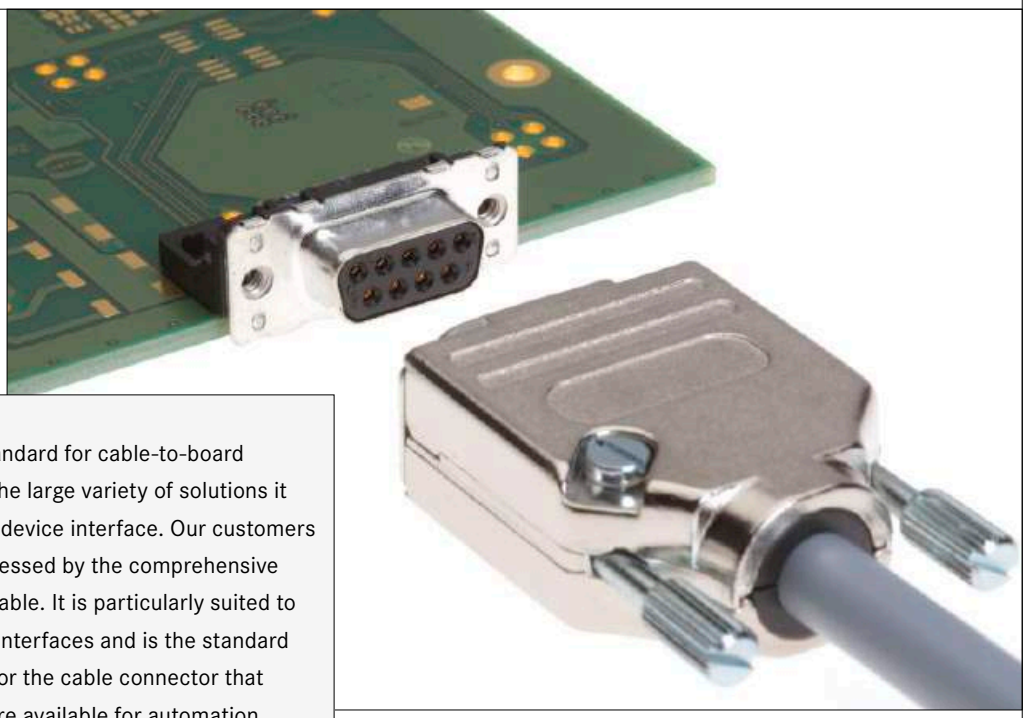

D-Sub connectors are an Industry Standard for cable-to-board connectivity applications. Thanks to the large variety of solutions it offers, it can be universally used as a device interface. Our customers manufacturing requirements are addressed by the comprehensive range of PCB termination styles available. It is particularly suited to configuring communication and data interfaces and is the standard for many fieldbus profiles. Solutions for the cable connector that can be easily assembled in the field are available for automation applications.

Application profile:

CONNECTION TYPE		ENVIRONMENT		APPLICATION						
Board to Board	Cable/ Wire to Board	IP20	IP65 / IP67	Data	Signal	Power	high performance			
							Data transfer rate	Shielding	Number of contacts, contact density	Voltage, working current
●	●	●	●	●	●	●		●	●	●

Cable termination

Han-Quick Lock®

IDC

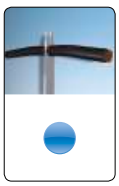

Crimp

Screw

Cage clamp

Axial screw

PCB termination

THT

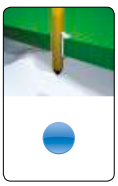

SMC

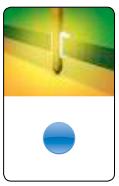

SMT

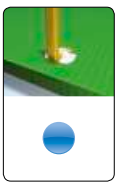

Press-in

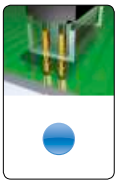

Application standard

PROFIBUS DeviceNet CANopen

Housing integration

Separate housing

Integrated housing

Contents

	Page
D-Sub connector system – introduction	**05.02**
D-Sub Standard connectors (D-Sub – S)	**05.04**
D-Sub High Density connectors (D-Sub – HD)	**05.38**
D-Sub Mixed connectors (D-Sub – M)	**05.50**
D-Sub Filter connectors (D-Sub – F)	**05.90**
D-Sub Waterproof IP67 connectors (D-Sub – W)	**05.116**
D-Sub Housing range (D-Sub – H) and accessories	**05.140**
D-Sub Standard press-in connectors	**05.171**
D-Sub Standard SMC connectors	**05.176**
D-Sub Standard SMT connectors	**05.184**
Cables for insulation displacement termination and cable assemblies	**05.194**

Tooling see chapter 20

05. Subminiature D Connectors

In the automation industry, the Subminiature D connectors are the standard interfaces for data, signal and service/programmer interfaces. The extensive HARTING product range allows the set up of all Subminiature D interfaces common in the industry, such as for field buses (PROFIBUS, CanOpen and DeviceNet), while the connectors are also available in optional plastic and metal housings with IP20 and IP65 / IP 67 protection.
In addition to the comprehensive range of Standard connectors with 9 to 50 straight, right-angled or US foot print style contacts, HARTING offers other product ranges which extend the application field of Subminiature D connectors considerably.

Depending on the product family, various termination techniques can be supplied such as press-in, solder, SMC or SMT to match the customer's termination process.
In addition, a wide range of hoods and accessories complete the cable connector range to fulfil all kinds of requirements such as EMC, IP65 / IP67 etc.
For the cabling HARTING provides cable assemblies for standard applications like fieldbus, cable or customized solutions.

Specific features of the product range

D-SUB – MIXED CONNECTORS

with nearly 20 different contact arrangements offering versatile options for mixing power, coaxial, high voltage, signal and even pneumatic contacts in one connector.

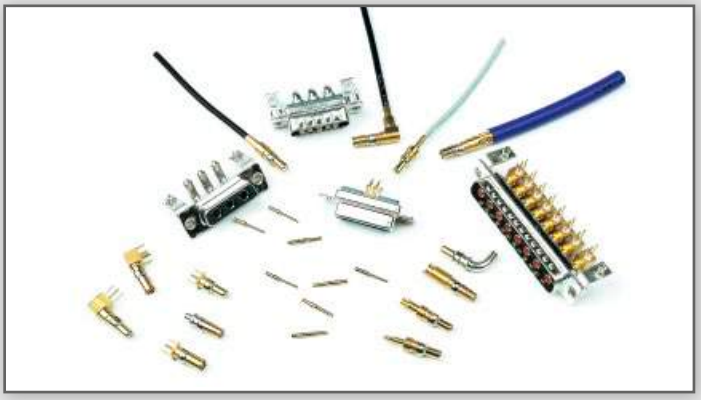

D-SUB – WATERPROOF

IP65 / IP67 connectors with 9 to 50 contacts for panel mount to PCB or cable.

D-SUB – FILTER CONNECTORS

with 9 to 37 contacts and integrated, different filter designs, like C, L or Pi types.

D-SUB – HIGH DENSITY CONNECTORS

with 15 to 78 straight and right-angled contacts, exceeding the contact capacity of the standard Subminiature D connectors by 70 %.

Number of contacts	9, 15, 25, 37, 50 UL recognized
Working current see current carrying capacity chart	
Turned contacts	7.5 A max.
Stamped contacts	6.5 A max.
Test voltage $U_{r.m.s.}$	1 kV
Clearance and creepage	≥ 1.0 mm
Contact resistance	≤ 10 mΩ
Insulation resistance	≥ 10^{10} Ω
Temperature range	-55 °C … +125 °C
The higher temperature limit includes the local ambient and heating effect of the contacts under load	
Terminations	a) Solder pins Ø 0.6 mm for P.C.B. holes Ø 0.8/1 mm b) Solder pins, angled 90° Ø 0.6 mm for P.C.B. holes Ø 1 mm
Materials	
Mouldings and hoods	Thermoplastic resin, glass-fibre filled (PBTP), UL 94-V0
Contacts	Copper alloy
Contact surface	
Contact zone	selectively plated according to performance level[1)]
Metal shell	Plated steel

Insertion and withdrawal force

Connector on P.C.B.
Solder, straight with clips
– insertion max. per connector: 60 N
– withdrawal min. per connector: 10 N

Mating force

9 way	≤ 30 N
15 way	≤ 50 N
25 way	≤ 83 N
37 way	≤ 123 N
50 way	≤ 167 N

Current carrying capacity

The current carrying capacity is limited by maximum temperature of materials for inserts and contacts including terminals.
The current capacity-curve is valid for continuous, not interrupted current-loaded contacts of connectors when simultaneous power on all contacts is given, without exceeding the maximum temperature.

Control and test procedures according to DIN IEC 60 512.

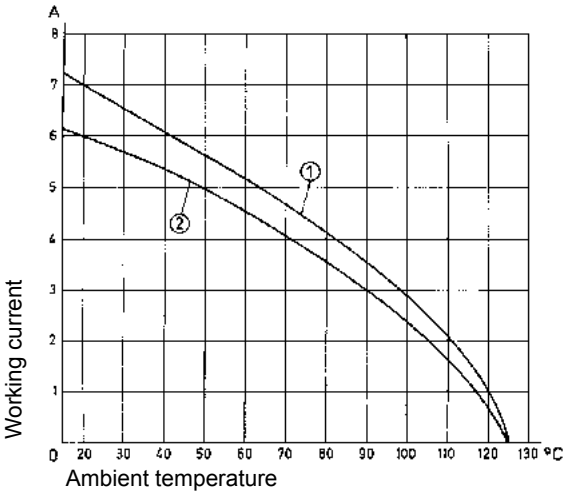

Example: 25 way connector
① Turned contacts
② Stamped contacts

Contact arrangement View from termination side

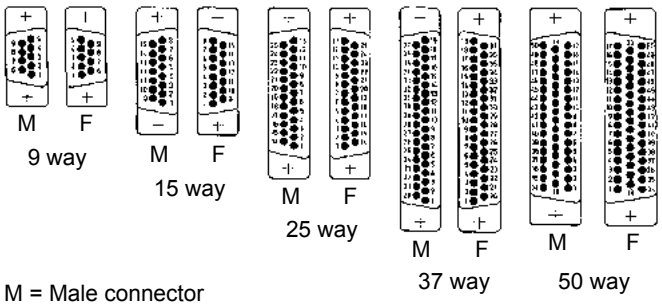

M = Male connector
F = Female connector

Mating conditions as per DIN 41 652

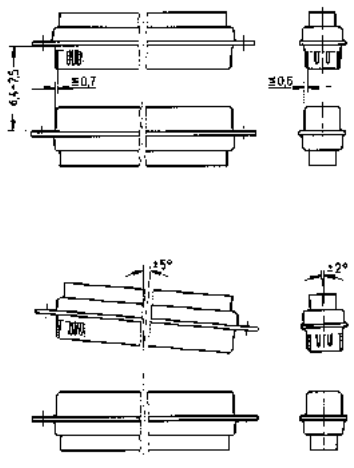

[1)] Performance level 3, 50 mating cycles, no gas test
Performance level 2 as per CECC 75 301-802, 250 mating cycles, 4 days 4 mixed gas test – IEC 60 512
Performance level 1 as per CECC 75 301-802, 500 mating cycles, 10 days 4 mixed gas test – IEC 60 512

Notes

Number of contacts

9–50

Turned solder pins, straight

Identification	No. of contacts	Part number	
Performance levels Explanations see page 05.04 Other performance levels on request		Performance level 3	Performance level 2
Male connector metal shell with dimples	9	09 67 009 5654	09 67 009 5655
	15	09 67 015 5654	09 67 015 5655
	25	09 67 025 5654	09 67 025 5655
	37	09 67 037 5654	09 67 037 5655
	50	09 67 050 5654[1)]	09 67 050 5655[1)]
Female connector metal shell	9	09 67 009 4754	09 67 009 4755
	15	09 67 015 4754	09 67 015 4755
	25	09 67 025 4754	09 67 025 4755
	37	09 67 037 4754	09 67 037 4755
	50	09 67 050 4754[1)]	09 67 050 4755[1)]

Male connector

9-37 50

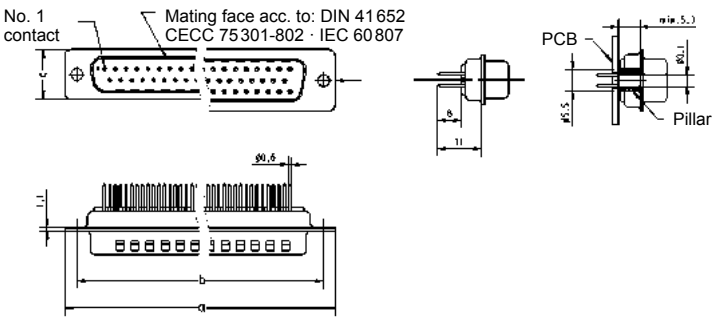

Female connector

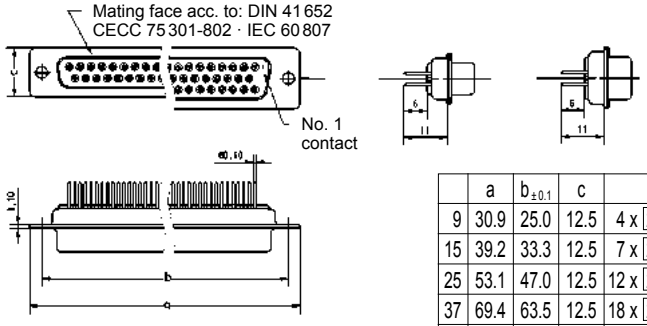

	a	$b_{\pm 0.1}$	c	g	h
9	30.9	25.0	12.5	4 x 2.74 = 10.96	3 x 2.74 = 8.22
15	39.2	33.3	12.5	7 x 2.74 = 19.18	6 x 2.74 = 16.44
25	53.1	47.0	12.5	12 x 2.76 = 33.12	11 x 2.76 = 30.36
37	69.4	63.5	12.5	18 x 2.76 = 49.68	17 x 2.76 = 46.92
50	67.0	61.1	15.4	16 x 2.76 = 44.16	15 x 2.76 = 41.40

Board drillings

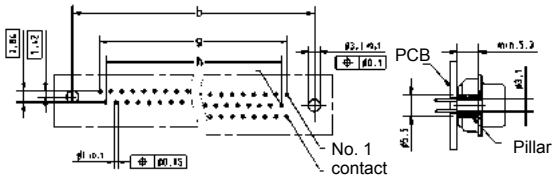

Dimensions in mm

[1)] Not normally kept in stock

Mating conditions see page 05.04

Number of contacts

9–50

Turned solder pins, straight without grounding-pins

Identification	No. of contacts	Part number	
Performance levels ▶ Explanations see page 05.04 Other performance levels on request		Performance level 3	Performance level 2
Male connector metal shell with dimples available on request	9	09 66 121 770 .	09 66 121 670 .
	15	09 66 221 770 .	09 66 221 670 .
	25	09 66 321 770 .	09 66 321 670 .
	37	09 66 421 770 .	09 66 421 670 .
	50	09 66 521 770 .	09 66 521 670 .
Please insert digit for flange thread or fitted female screw locks M3 ▶ 1 4-40 UNC ▶ 2 fitted screw locks 4-40 UNC ▶ 3			

Male connector

9-37 50

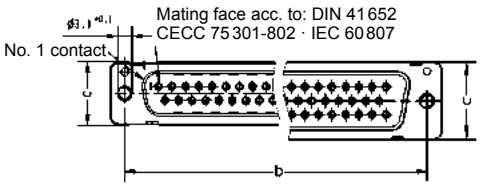

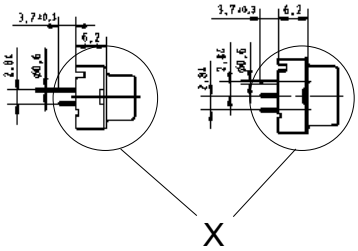

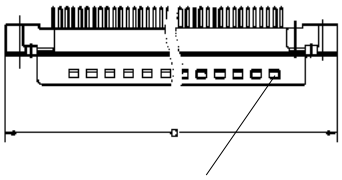

	a	$b_{\pm 0.1}$	c	g	h
9	30.9	25.0	12.9	4 x 2.74 = 10.96	3 x 2.74 = 8.22
15	39.2	33.3	12.9	7 x 2.74 = 19.18	6 x 2.74 = 16.44
25	53.1	47.0	12.9	12 x 2.76 = 33.12	11 x 2.76 = 30.36
37	69.4	63.5	12.9	18 x 2.76 = 49.68	17 x 2.76 = 46.92
50	67.0	61.1	15.7	16 x 2.76 = 44.16	15 x 2.76 = 41.40

Board drillings

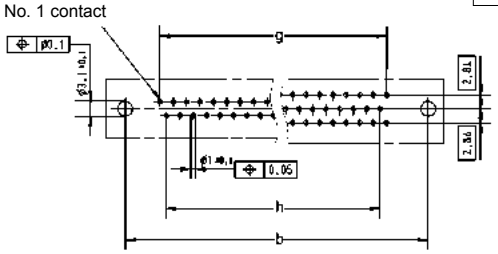

M3 or 4-40 UNC

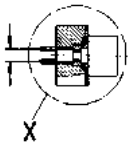

fitted screw locks 4-40 UNC

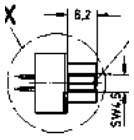

Dimensions in mm

Mating conditions see page 05.04

Number of contacts

9–50

Stamped solder pins, straight with/without grounding board locks

Identification	No. of contacts	Part number	
Performance levels ▶ Explanations see page 05.04 Other performance levels on request		Performance level 3	Performance level 2
Male connector metal shell with dimples			
Without grounding board locks	9	09 65 121 770 .	09 65 121 670 .
	15	09 65 221 770 .	09 65 221 670 .
	25	09 65 321 770 .	09 65 321 670 .
	37	09 65 421 770 .	09 65 421 670 .
With grounding board locks	9	09 65 161 771 .	09 65 161 671 .
	15	09 65 261 771 .	09 65 261 671 .
	25	09 65 361 771 .	09 65 361 671 .
	37	09 65 461 771 .	09 65 461 671 .
Female connector metal shell			
Without grounding board locks	9	09 66 111 750 .	09 66 111 650 .
	15	09 66 211 750 .	09 66 211 650 .
	25	09 66 311 750 .	09 66 311 650 .
	37	09 66 411 750 .	09 66 411 650 .
	50	09 66 511 750 .	09 66 511 650 .
With grounding board locks	9	09 66 151 751 .	09 66 151 651 .
	15	09 66 251 751 .	09 66 251 651 .
	25	09 66 351 751 .	09 66 351 651 .
	37	09 66 451 751 .	09 66 451 651 .
Please insert digit for flange thread or fitted female screw locks			
M3 ▶ 1			
4-40 UNC ▶ 2			
fitted screw locks 4-40 UNC ▶ 3[1)]			

[1)] Fitted screw locks 4-40 UNC not normally kept in stock for performance level 3

Connector dimensions see page 05.09. Mating conditions see page 05.04.

Number of contacts

9–50

Stamped solder pins, straight with/without grounding board locks

Identification	Drawing	Dimensions in mm

Male connector
9 – 37 contacts

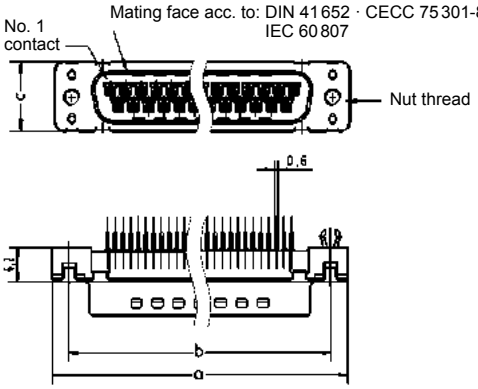

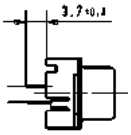

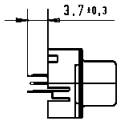

Female connector
9 – 37 contacts

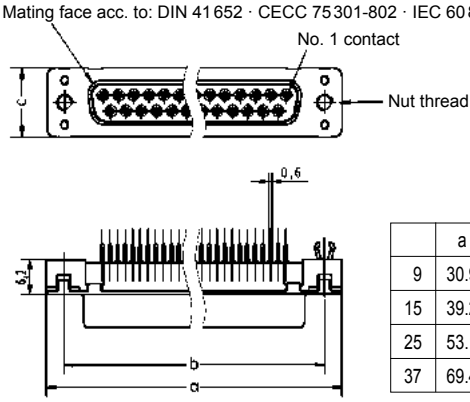

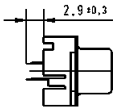

	a	b ±0.1	c	g	h
9	30.9	25.0	12.5	4 x 2.74 = 10.96	3 x 2.74 = 8.22
15	39.2	33.3	12.5	7 x 2.74 = 19.18	6 x 2.74 = 16.44
25	53.1	47.0	12.5	12 x 2.76 = 33.12	11 x 2.76 = 30.36
37	69.4	63.5	12.5	18 x 2.76 = 49.68	17 x 2.76 = 46.92

Board drillings
9 – 37 contacts

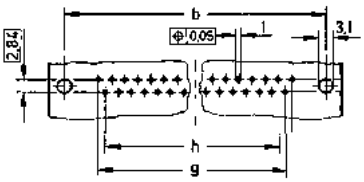

Front panel width 3 TE
3 x 5.08 mm

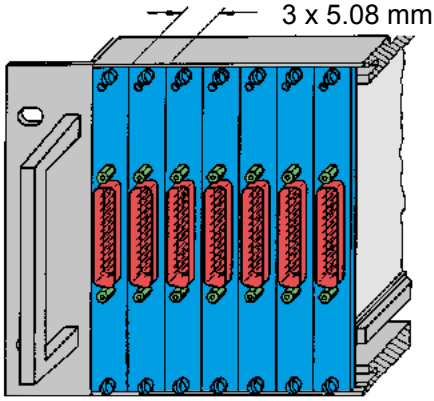

Front panel width 4 TE
4 x 5.08 mm

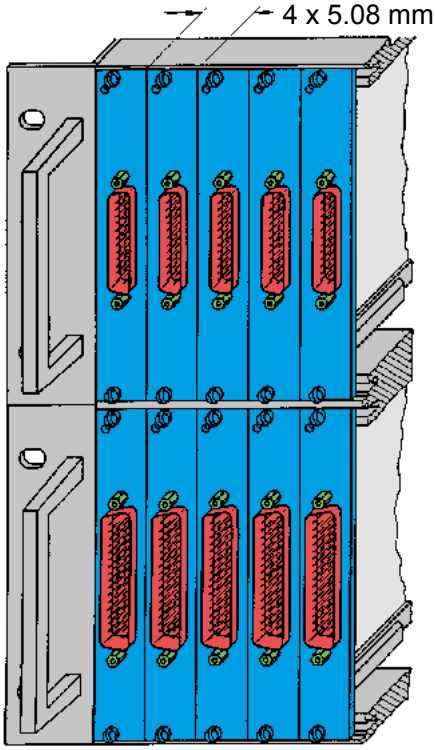

Front panel width 5 TE
5 x 5.08 mm

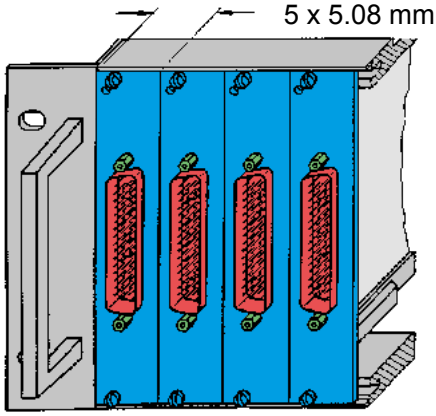

Low-Profile Versions
pages 05.18 – 05.21

3,6
9-37 way

6,2
50 way

Standard Versions
pages 05.12 – 05.17

7,3
9-37 way

8,7
50 way

U.S. Footprint Versions
pages 05.22 – 05.23

6,3
9-37 way

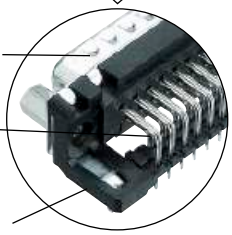

Advantages

All-round protective metal shell
- Polarisation
- Contact protection
- Plated shell
- Male connector with dimples

Plated terminations for increased solderability

Grounding contact riveted to metal shell

Integrated plastic mounting bracket

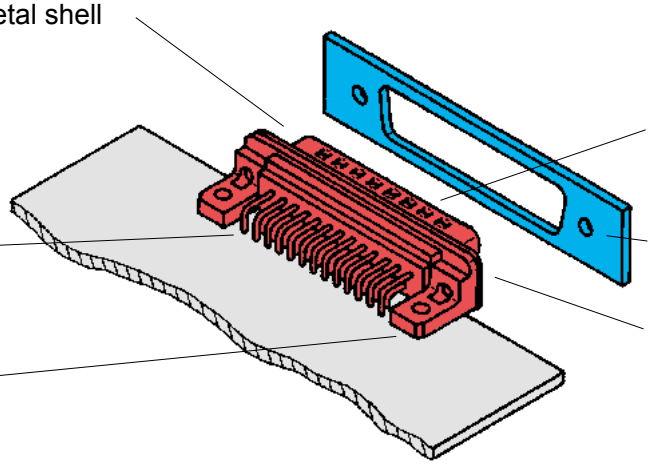

Contact surface finish to different performance levels

Panel

Different metal threads possible in flange area
- M3
- 4-40 UNC
- fitted female screw locks 4-40 UNC
- max. torque ≤ 0.8 Nm

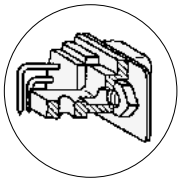

Mounting bracket

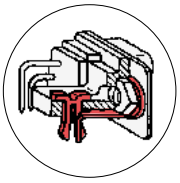

Mounting bracket
with snap-in-clips and grounding pin

Mounting height

Low-Profile Versions

The reduced mounting height of these connectors allow them to be used on the same PCB as DIN 41612 types with no loss of packaging density when card frames to DIN 41494 are used.

9-37 way connectors with 3.6 mm mounting height can be fitted to front panels of 3 TE (15.24 mm) width.

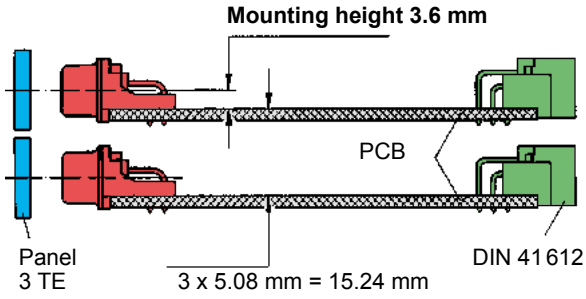

50 way connectors with 6.2 mm mounting height can be fitted to front panels of 4 TE (20.32 mm) width.

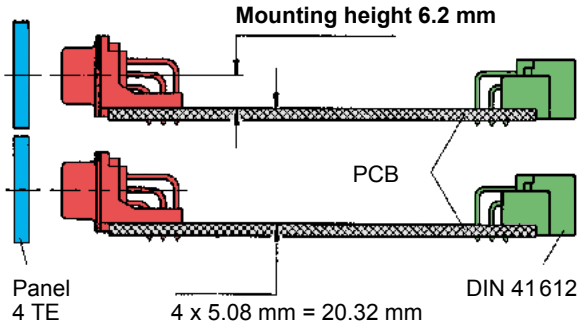

Standard Versions US Footprint

9-37 way connectors with 7.3 mm mounting height can be fitted to front panels of 4 TE (20.32 mm) width.

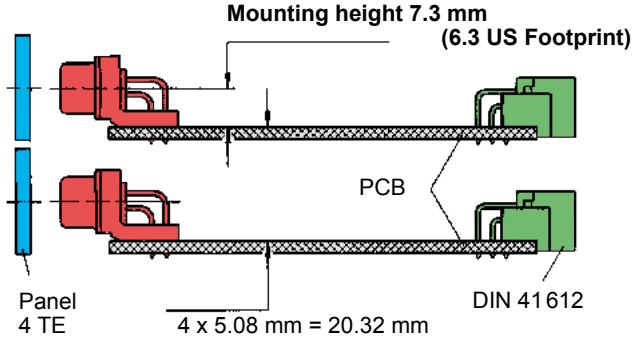

50 way connectors with 8.7 mm mounting height can be fitted to front panels of 5 TE (25.4 mm) width.

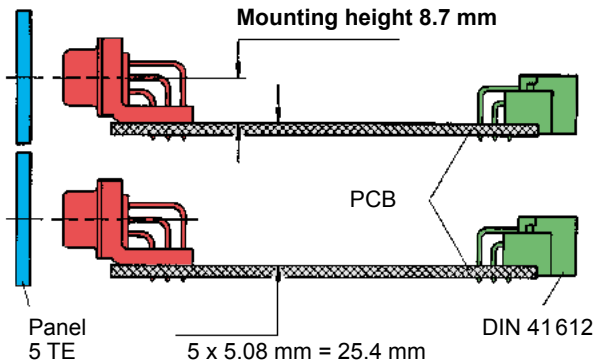

Number of contacts

9–37
50

Mounting height

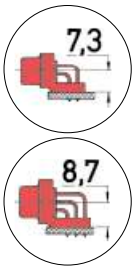

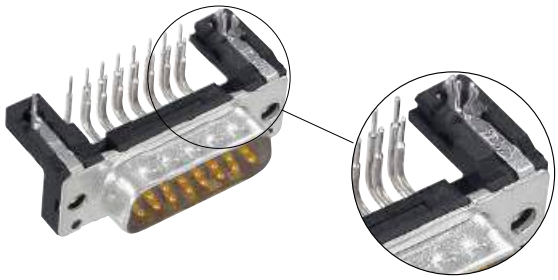

Standard Versions

Turned solder pins, angled with/without snap-in-clips and grounding board locks

Identification	No. of contacts	Part number Performance level 3	Part number Performance level 2
Performance levels ▶ Explanations see page 05.04 Other performance levels on request			
Male connector metal shell with dimples		2.84 mm pitch	2.84 mm pitch
With snap-in clips and grounding board locks	9	09 66 163 781 .	09 66 163 681 .
	15	09 66 263 781 .	09 66 263 681 .
	25	09 66 363 781 .	09 66 363 681 .
	37	09 66 463 781 .	09 66 463 681 .
	50	09 66 563 781 .	09 66 563 681 .
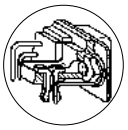		2.54 mm pitch	2.54 mm pitch
available on request	9	09 66 162 781 .	09 66 162 681 .
	15	09 66 262 781 .	09 66 262 681 .
	25	09 66 362 781 .	09 66 362 681 .
	37	09 66 462 781 .	09 66 462 681 .
	50	09 66 562 781 .	09 66 562 681 .
		2.84 mm pitch	2.84 mm pitch
Without snap-in clips and grounding board locks	9	09 66 123 780 .	09 66 123 680 .
	15	09 66 223 780 .	09 66 223 680 .
	25	09 66 323 780 .	09 66 323 680 .
	37	09 66 423 780 .	09 66 423 680 .
	50	09 66 523 780 .	09 66 523 680 .
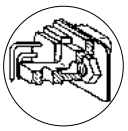		2.54 mm pitch	2.54 mm pitch
available on request	9	09 66 122 780 .	09 66 122 680 .
	15	09 66 222 780 .	09 66 222 680 .
	25	09 66 322 780 .	09 66 322 680 .
	37	09 66 422 780 .	09 66 422 680 .
	50	09 66 522 780 .	09 66 522 680 .
Please insert digit for flange thread or fitted female screw locks			
M3 ▶ 1			
4-40 UNC ▶ 2			
fitted screw locks 4-40 UNC ▶ 3			

Number of contacts

9–37
50

Mounting height

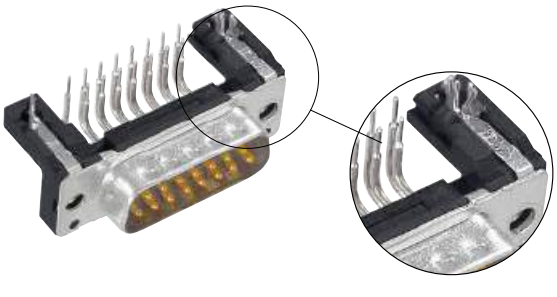

Standard Versions

Turned solder pins, angled with/without snap-in-clips and grounding board locks

Identification	Drawing	Dimensions in mm

Male connector

With snap-in clips
and grounding board locks

9-37 50

Mating face acc. to: DIN 41 652 · CECC 75 301-802 · IEC 60 807

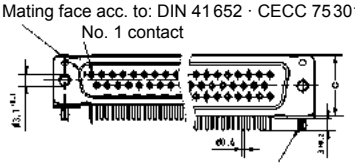

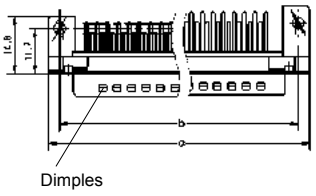

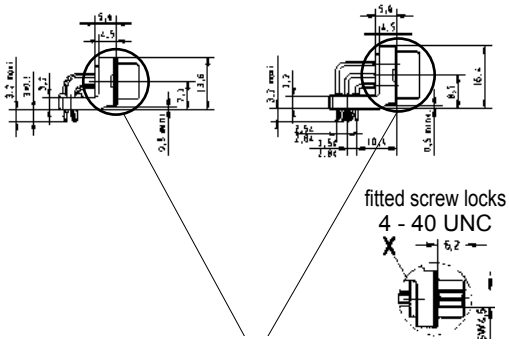

Without snap-in clips
and grounding board locks

9-37 50

Mating face acc. to: DIN 41 652 · CECC 75 301-802 · IEC 60 807

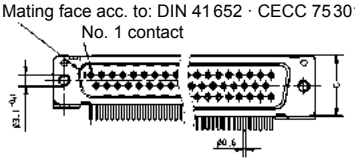

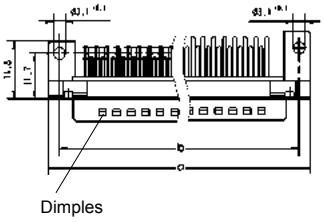

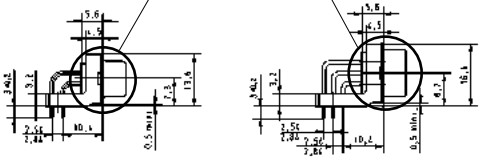

Board drillings

9-37 50

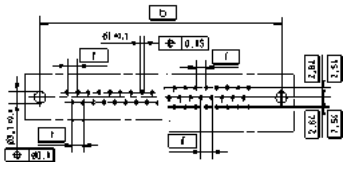

	a	$b_{\pm 0.1}$	c	f
9	30.90	25.00	12.90	2.74
15	39.20	33.30	12.90	2.74
25	53.10	47.00	12.90	2.76
37	69.40	63.50	12.90	2.76
50	67.00	61.10	15.70	2.76

Mating conditions see page 05.04
Mounting details see page 05.24

Number of contacts

9–37
50

Mounting height

Standard Versions

Stamped solder pins, angled with grounding board locks

Identification	No. of contacts	Part number	
		Performance level 3	Performance level 2
Performance levels ▶ Explanations see page 05.04 Other performance levels on request			
Male connector metal shell with dimples			
		2.84 mm pitch	2.84 mm pitch
	9	09 65 163 781 . [1]	09 65 163 681 . [1]
	15	09 65 263 781 . [1]	09 65 263 681 . [1]
	25	09 65 363 781 . [1]	09 65 363 681 . [1]
	37	09 65 463 781 . [1]	09 65 463 681 . [1]
		2.54 mm pitch	2.54 mm pitch
	9	09 65 162 781 .	09 65 162 681 .
	15	09 65 262 781 .	09 65 262 681 .
	25	09 65 362 781 .	09 65 362 681 .
	37	09 65 462 781 .	09 65 462 681 .
Female connector metal shell			
		2.84 mm pitch	2.84 mm pitch
	9	09 66 153 761 . [1]	09 66 153 661 . [1]
	15	09 66 253 761 . [1]	09 66 253 661 . [1]
	25	09 66 353 761 . [1]	09 66 353 661 . [1]
	37	09 66 453 761 . [1]	09 66 453 661 . [1]
		2.54 mm pitch	2.54 mm pitch
	9	09 66 152 761 .	09 66 152 661 .
	15	09 66 252 761 .	09 66 252 661 .
	25	09 66 352 761 .	09 66 352 661 .
	37	09 66 452 761 .	09 66 452 661 .
	50	09 66 552 761 . [1]	09 66 552 661 . [1]
Please insert digit for flange thread or fitted female screw locks			
Ø 3.1 mm hole ▶ 0[1]			
M3 ▶ 1			
4-40 UNC ▶ 2			
fitted screw locks 4-40 UNC ▶ 3			

[1] Not normally kept in stock

Number of contacts

9–37
50

Mounting height

Standard Versions

Stamped solder pins, angled with grounding board locks

Identification	Drawing	Dimensions in mm

Male connector

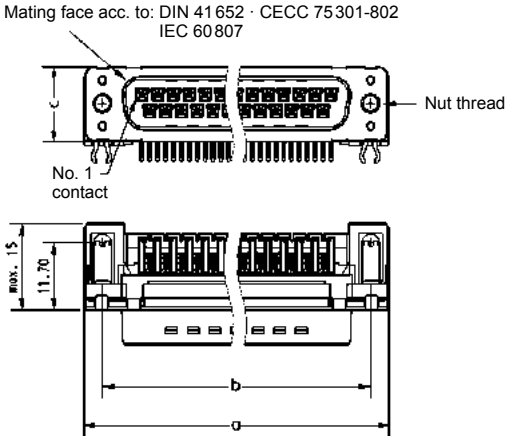

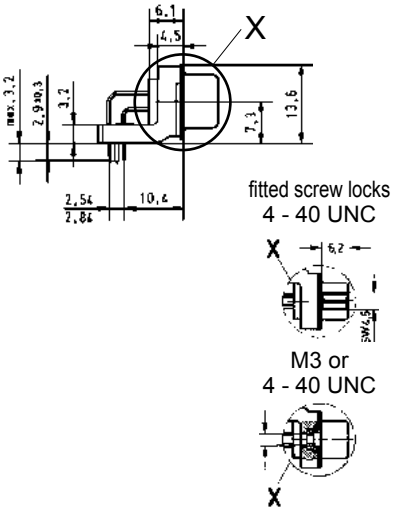

Female connector

9-37 50

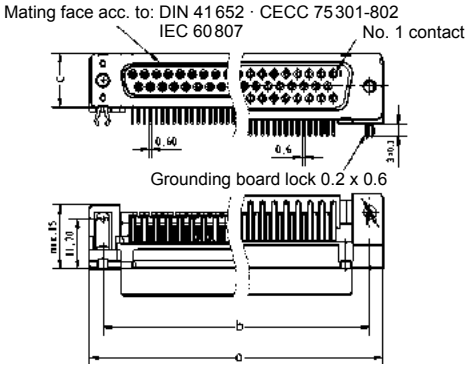

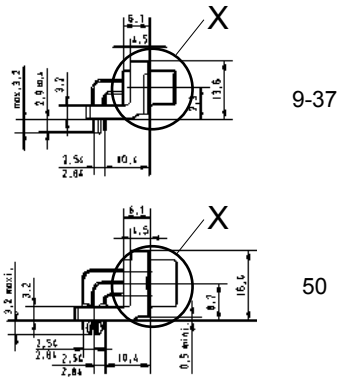

Board drillings

9-37 50

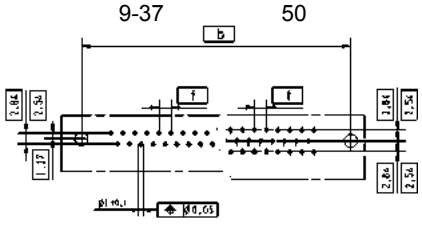

	a	$b_{\pm 0.1}$	c	f
9	30.90	25.00	12.50	2.74
15	39.20	33.30	12.50	2.74
25	53.10	47.00	12.50	2.76
37	69.40	63.50	12.50	2.76
50	67.00	61.10	15.40	2.76

Mating conditions see page 05.04
Mounting details see page 05.24

Number of contacts

9–37
50

Mounting height

Standard Versions

Stamped solder pins, angled without grounding board locks

Identification	No. of contacts	Part number	
Performance levels ▶ Explanations see page 05.04 Other performance levels on request		Performance level 3	Performance level 2
Male connector metal shell with dimples		2.84 mm pitch	2.84 mm pitch
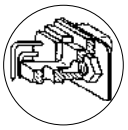	9	09 65 123 780 . [1]	09 65 123 680 . [1]
	15	09 65 223 780 . [1]	09 65 223 680 . [1]
	25	09 65 323 780 . [1]	09 65 323 680 . [1]
	37	09 65 423 780 . [1]	09 65 423 680 . [1]
		2.54 mm pitch	2.54 mm pitch
	9	09 65 122 780 .	09 65 122 680 .
	15	09 65 222 780 .	09 65 222 680 .
	25	09 65 322 780 .	09 65 322 680 .
	37	09 65 422 780 .	09 65 422 680 .
Female connector metal shell		2.84 mm pitch	2.84 mm pitch
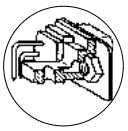	9	09 66 113 760 . [1]	09 66 113 660 . [1]
	15	09 66 213 760 . [1]	09 66 213 660 . [1]
	25	09 66 313 760 . [1]	09 66 313 660 . [1]
	37	09 66 413 760 . [1]	09 66 413 660 . [1]
		2.54 mm pitch	2.54 mm pitch
	9	09 66 112 760 .	09 66 112 660 .
	15	09 66 212 760 .	09 66 212 660 .
	25	09 66 312 760 .	09 66 312 660 .
	37	09 66 412 760 .	09 66 412 660 .
	50	09 66 512 760 . [1]	09 66 512 660 . [1]

Please insert digit for flange thread or fitted female screw locks

Ø 3.1 mm hole ▶	0[1]
M3 ▶	1
4-40 UNC ▶	2
fitted screw locks 4-40 UNC ▶	3

[1] Not normally kept in stock

Number of contacts

9–37
50

Mounting height

Standard Versions

Stamped solder pins, angled without grounding board locks

Identification	Drawing	Dimensions in mm

Male connector

Mating face acc. to: DIN 41 652 · CECC 75 301-802 · IEC 60 807

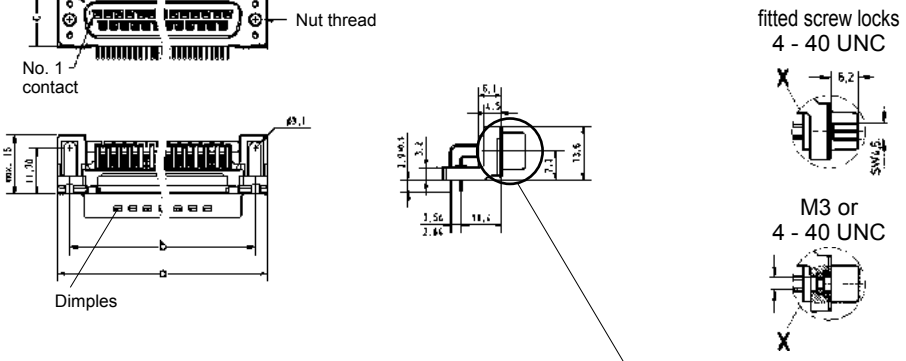

Female connector

9-37 50

Mating face acc. to: DIN 41 652 · CECC 75 301-802 · IEC 60 807

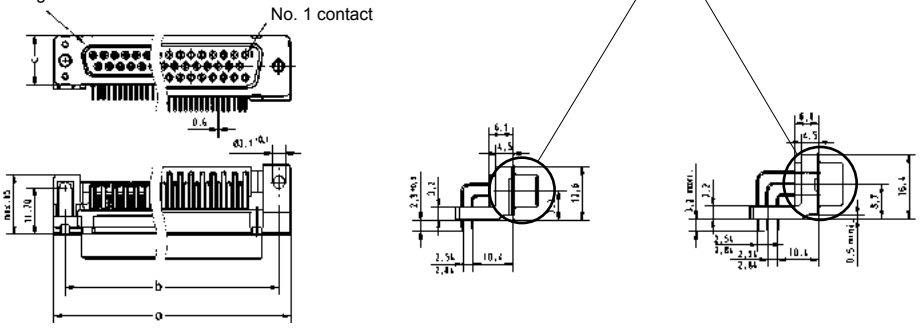

Board drillings

9-37 50

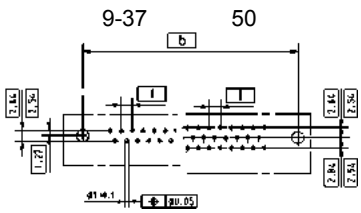

	a	$b_{\pm 0.1}$	c	f
9	30.90	25.00	12.50	2.74
15	39.20	33.30	12.50	2.74
25	53.10	47.00	12.50	2.76
37	69.40	63.50	12.50	2.76
50	67.00	61.10	15.40	2.76

Mating conditions see page 05.04
Mounting details see page 05.24

Number of contacts

9–37
50

Mounting height

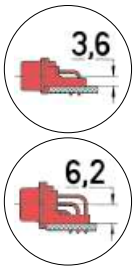

Low-Profile Versions

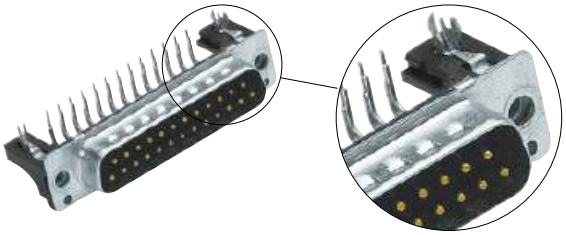

Turned solder pins, angled with snap-in-clips and grounding board locks

Identification	No. of contacts	Part number	
Performance levels Explanations see page 05.04 Other performance levels on request ▶		Performance level 3	Performance level 2
Male connector metal shell with dimples		2.54 mm pitch	2.54 mm pitch
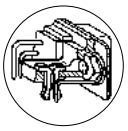	9	09 66 162 781 .	09 66 162 681 .
	15	09 66 262 781 .	09 66 262 681 .
	25	09 66 362 781 .	09 66 362 681 .
	37	09 66 462 781 .	09 66 462 681 .
	50	09 66 562 781 .	09 66 562 681 .

available on request

Please insert digit for flange thread or fitted female screw locks

M3 ▶	5
4-40 UNC ▶	6
fitted screw locks 4-40 UNC ▶	7

Number of contacts

9–37
50

Mounting height

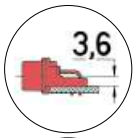

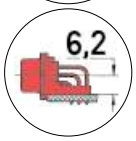

Low-Profile Versions

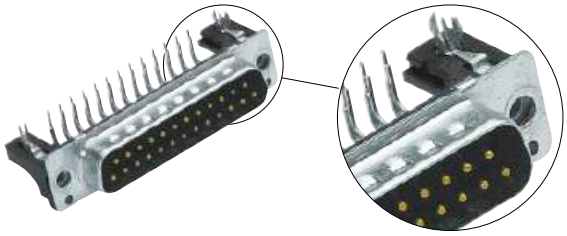

Turned solder pins, angled with snap-in-clips and grounding board locks

Identification	Drawing	Dimensions in mm

Male connector

9-37 50

Mating face acc. to: DIN 41 652 · CECC 75 301-802 · IEC 60 807

No. 1 contact

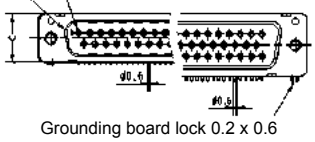

Grounding board lock 0.2 x 0.6

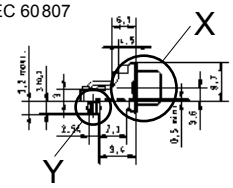

fitted screw locks
4 - 40 UNC

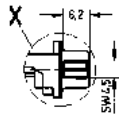

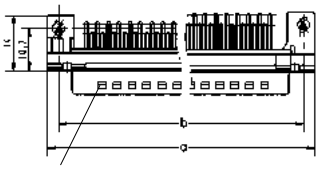

Dimples

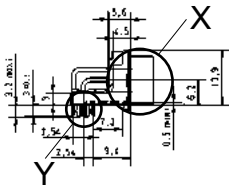

M3 or
4 - 40 UNC

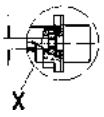

Board drillings

9-37 50

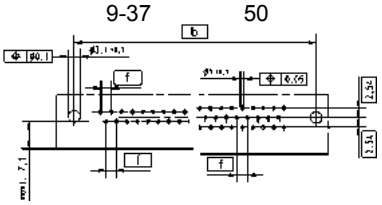

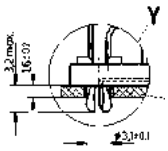

plated through holes

	a	$b_{\pm 0.1}$	c	f
9	30.90	25.00	12.50	2.74
15	39.20	33.30	12.50	2.74
25	53.10	47.00	12.50	2.76
37	69.40	63.50	12.50	2.76
50	67.00	61.10	15.70	2.76

Mating conditions see page 05.04
Mounting details see page 05.24

Number of contacts

9–37
50

Mounting height

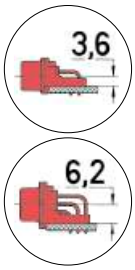

Low-Profile Versions

Stamped solder pins, angled with grounding board locks

Identification	No. of contacts	Part number		Part number	
Performance levels ▶ Explanations see page 05.04 Other contact surfaces on request		Performance level 3		Performance level 2	
Male connector metal shell with dimples					
	9	09 65 162 781 .		09 65 162 681 .	
	15	09 65 262 781 .		09 65 262 681 .	
	25	09 65 362 781 .		09 65 362 681 .	
	37	09 65 462 781 .		09 65 462 681 .	
Female connector metal shell					
	9	09 66 152 761 .		09 66 152 661 .	
	15	09 66 252 761 .		09 66 252 661 .	
	25	09 66 352 761 .		09 66 352 661 .	
	37	09 66 452 761 .		09 66 452 661 .	
	50	09 66 552 761 .	1)	09 66 552 661 .	1)
Please insert digit for flange thread or fitted female screw locks M3 ▶ 5 4-40 UNC ▶ 6 fitted screw locks 4-40 UNC ▶ 7					

1) Not normally kept in stock

Number of contacts

9–37
50

Mounting height

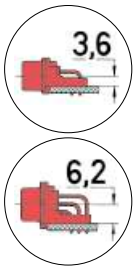

Low-Profile Versions

Stamped solder pins, angled with grounding board locks

Identification	Drawing	Dimensions in mm

Male connector

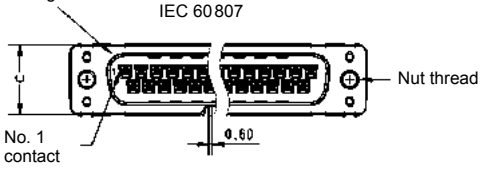

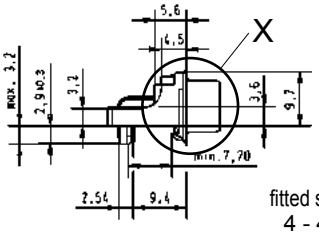

fitted screw locks
4 - 40 UNC

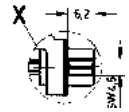

M3 or
4 - 40 UNC

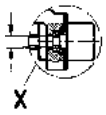

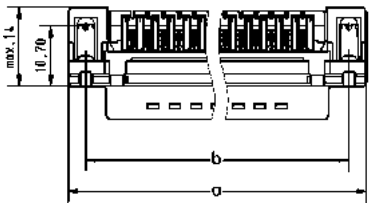

9-37 50

Female connector

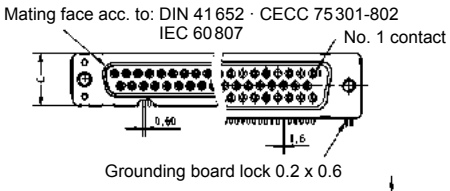

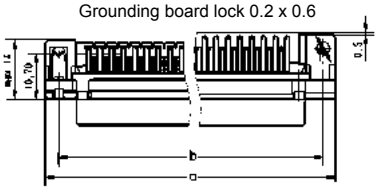

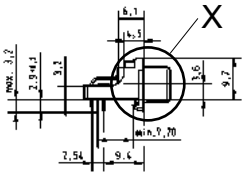

9-37

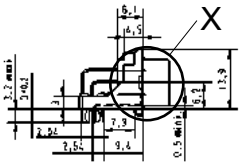

50

Board drillings

9-37 50

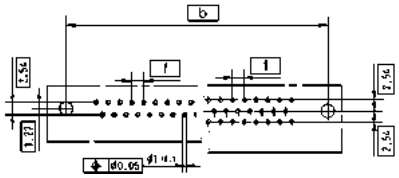

	a	$b_{\pm 0.1}$	c	f
9	30.90	25.00	12.50	2.74
15	39.20	33.30	12.50	2.74
25	53.10	47.00	12.50	2.76
37	69.40	63.50	12.50	2.76
50	67.00	61.10	15.40	2.76

Mating conditions see page 05.04
Mounting details see page 05.24

U.S. Footprint

Number of contacts

9–37

Mounting height

Stamped solder pins, angled with snap-in-clips and grounding board locks

Identification	No. of contacts	Part number	
Performance levels Explanations see page 05.04 Other performance levels on request ▶		Performance level 3	S4[1]
Male connector metal shell with dimples		2.84 mm pitch	2.84 mm pitch
	9	09 68 163 781 .	09 68 163 581 .
	15	09 68 263 781 .	09 68 263 581 .
	25	09 68 363 781 .	09 68 363 581 .
	37	09 68 463 781 .	09 68 463 581 .
Female connector metal shell		2.84 mm pitch	2.84 mm pitch
	9	09 68 153 761 .	09 68 153 561 .
	15	09 68 253 761 .	09 68 253 561 .
	25	09 68 353 761 .	09 68 353 561 .
	37	09 68 453 761 .	09 68 453 561 .
Please insert digit for flange thread or fitted female screw locks			
M3 ▶ 1[2]			
4-40 UNC ▶ 2			
fitted screw locks 4-40 UNC ▶ 3			

[1] S4 = 0.76 µm (30 µinch) Au or PdNi equivalent
[2] Not normally kept in stock

U.S. Footprint

Number of contacts

9–37

Mounting height

Stamped solder pins, angled with snap-in-clips and grounding board locks

Identification	Drawing	Dimensions in mm

Male connector

Mating face acc. to: DIN 41652 · CECC 75301-802
IEC 60807

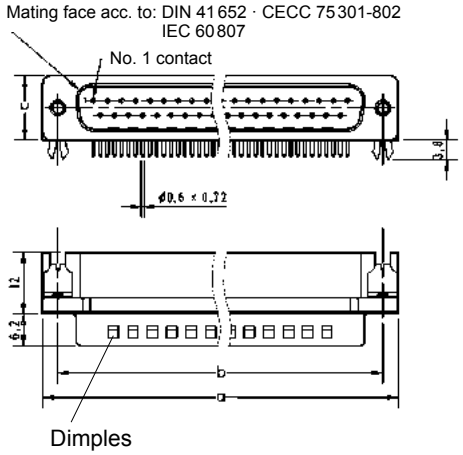

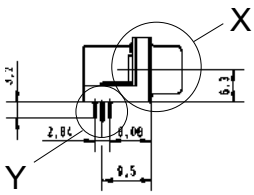

plated through holes

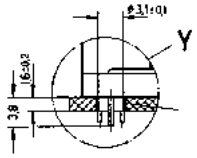

Female connector

Mating face acc. to: DIN 41652 · CECC 75301-802
IEC 60807

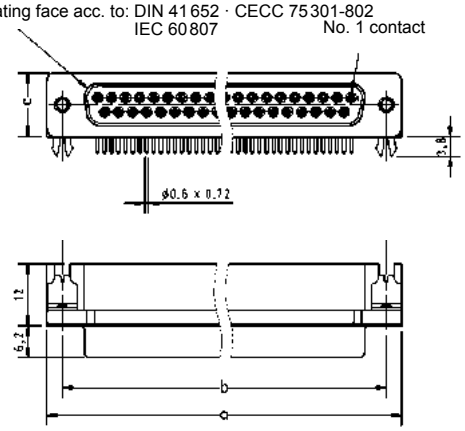

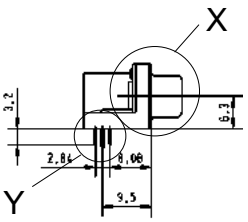

fitted screw locks
4 - 40 UNC

M3 or
4 - 40 UNC

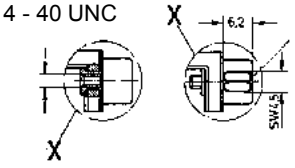

Board drillings

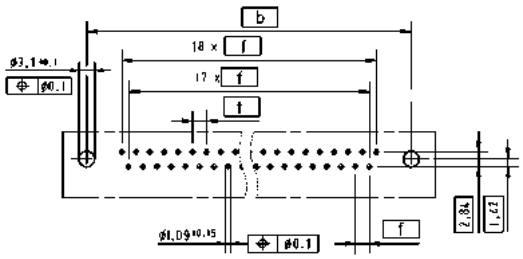

	a	$b_{\pm 0.1}$	c	f
9	30.90	25.00	12.55	2.77
15	39.20	33.30	12.55	2.77
25	53.10	47.00	12.55	2.77
37	69.40	63.50	12.55	2.77

Mating conditions see page 05.04
Mounting details see page 05.24

Identification	Drawing	Dimensions in mm

Standard Versions

Mounting height 7.3 mm

9-37 way
for front panel
4 units of width (TE)

Mounting height 8.7 mm

50 way
for front panel
5 units of width (TE)

for connectors see pages 05.12 – 05.17

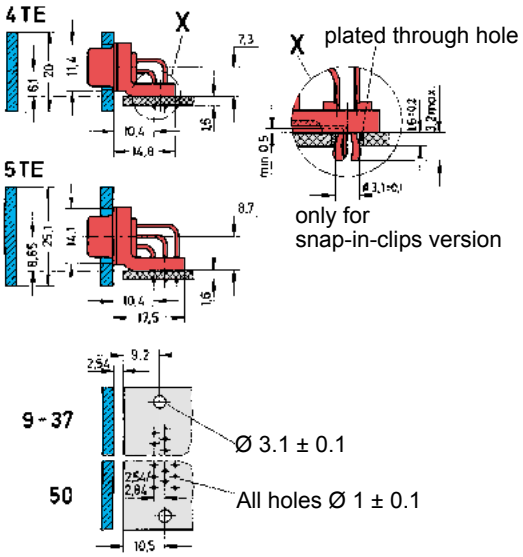

Low-Profile Versions

Mounting height 3.6 mm

9-37 way
for front panel
3 units of width (TE)

Mounting height 6.2 mm

50 way
for front panel
4 units of width (TE)

for connectors see pages 05.18 – 05.21

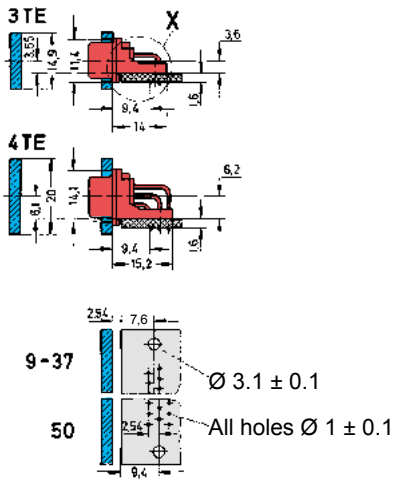

When used in a wave soldering process the mating face of the connector must be protected with adhesive tape.

U.S. Footprint Versions

Mounting height 6.3 mm

9-37 way
for front panel
4 units of width (TE)

for connectors see pages 05.22 – 05.23

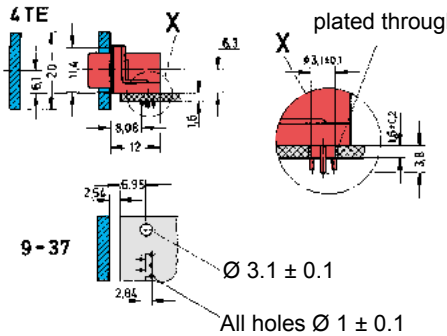

Panel cut out for front/rear mount

Values are taken from the CECC 75301-802

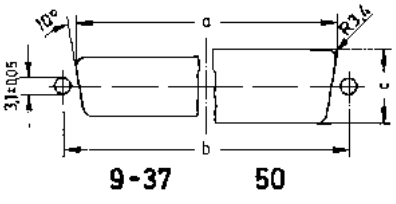

Front mount

	$a_{\pm 0.2}$	$b_{\pm 0.13}$	$c_{\pm 0.2}$
9	22.2	25.0	12.3
15	30.5	33.3	12.3
25	44.3	47.0	12.3
37	60.7	63.5	12.3
50	58.3	61.1	15.1

Rear mount

	$a_{\pm 0.2}$	$b_{\pm 0.13}$	$c_{\pm 0.2}$
9	20.5	25.0	11.4
15	28.8	33.3	11.4
25	42.5	47.0	11.4
37	59.1	63.5	11.4
50	56.3	61.1	14.1

Number of contacts	9, 15, 25, 37, 50 UL recognized
Working current see current carrying capacity chart	
Turned contacts	7.5 A max.
Stamped contacts	6.5 A max.
Insulation displacement	2 A max.
Test voltage $U_{r.m.s.}$	1 kV
Clearance and creepage	≥ 1.0 mm ≥ 0.7 mm (insulation displacement)
Contact resistance	≤ 10 mΩ
Insulation resistance	≥ 10^{10} Ω
Temperature range	
turned version	-55 °C … + 125 °C
stamped solder bucket version	-40 °C … + 85 °C

Terminations

a) Solder buckets
AWG 20

b) Stamped crimp contacts
AWG 28-24
0.09-0.25 mm²
max. insulation Ø 1.02 mm
AWG 24-20
0.25-0.56 mm²
max. insulation Ø 1.52 mm

c) Turned crimp contacts
AWG 22-18
0.33-0.82 mm²
AWG 24-20
0.25-0.52 mm²
AWG 26-22
0.13-0.33 mm²
AWG 28-24
0.09-0.25 mm²
max. insulation Ø 2.15 mm

d) Insulation displacement
AWG 28/7 and AWG 26/7

Materials	
Mouldings and hoods	Thermoplastic resin, glass-fibre filled (PBTP), UL 94-V0
Contacts	Copper alloy
Contact surface	
Contact zone	selectively plated according to performance level[1)]
Metal shell	Plated steel

Mating force

9 way	≤ 30 N
15 way	≤ 50 N
25 way	≤ 83 N
37 way	≤ 123 N
50 way	≤ 167 N

Current carrying capacity

The current carrying capacity is limited by maximum temperature of materials for inserts and contacts including terminals. The current capacity-curve is valid for continuous, not interrupted current-loaded contacts of connectors when simultaneous power on all contacts is given, without exceeding the maximum temperature.

Control and test procedures according to DIN IEC 60 512.

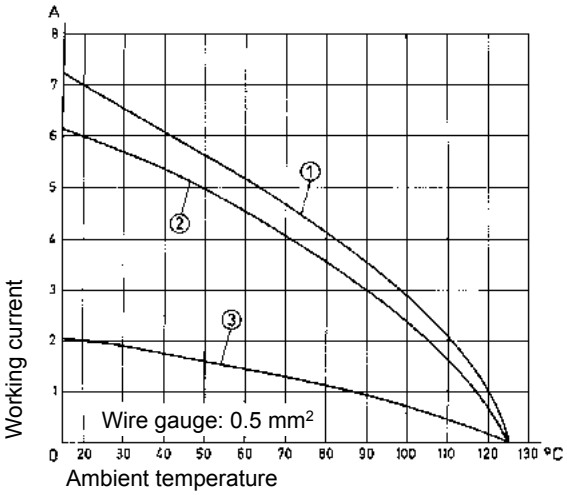

Example: 25 way connector
① Turned contacts
② Stamped contacts
③ Insulation displacement contacts

Contact arrangement View from termination side

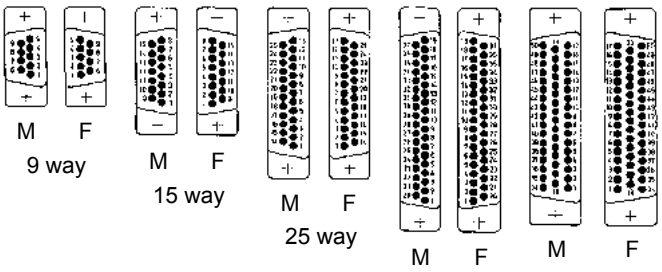

M = Male connector
F = Female connector

Mating conditions as per DIN 41 652

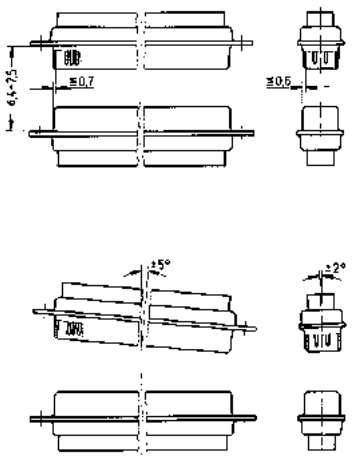

[1)] Performance level 3, 50 mating cycles, no gas test
Performance level 2 as per CECC 75 301-802, 250 mating cycles, 4 days 4 mixed gas test – IEC 60 512
Performance level 1 as per CECC 75 301-802, 500 mating cycles, 10 days 4 mixed gas test – IEC 60 512

Number of contacts

9–50

Crimp terminal

Identification	No. of contacts	Part number
Male connector Order contacts separately metal shell with dimples	9 15 25 37 50	09 67 009 5601 09 67 015 5601 09 67 025 5601 09 67 037 5601 09 67 050 5601
Female connector Order contacts separately metal shell	9 15 25 37 50	09 67 009 4701 09 67 015 4701 09 67 025 4701 09 67 037 4701 09 67 050 4701

Male connector

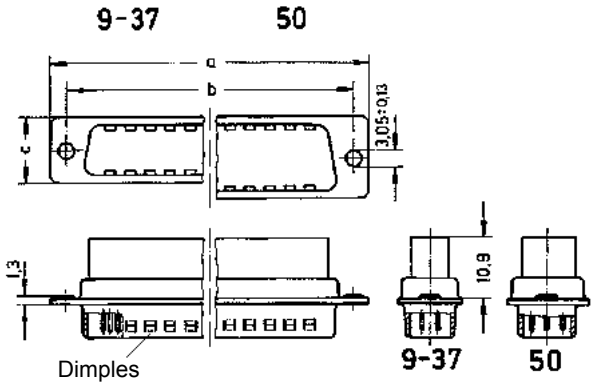

Female connector

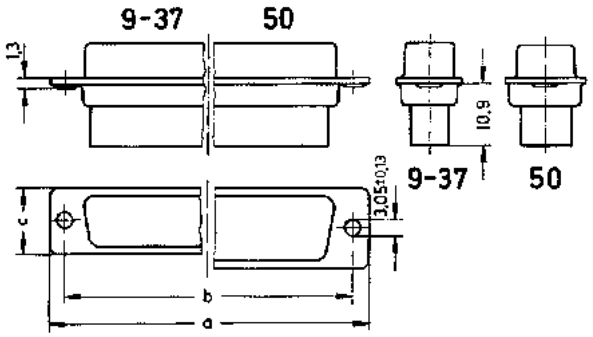

	a	$b_{\pm 0.1}$	c
9	30.9	25.0	12.5
15	39.2	33.3	12.5
25	53.1	47.0	12.5
37	69.4	63.5	12.5
50	67.0	61.1	15.4

Panel cut out for front/rear mount

Values are taken from the CECC 75301-802

see page 05.24

Dimensions in mm

Tooling see chapter 20

Crimp contacts see pages 05.27 ff
Mating conditions see page 05.04

Turned crimp contacts

Identification	Wire gauge (mm^2)	Part number		
		Male contacts	Female contacts	High-end female contacts
		Performance level 1*	Performance level 1*	Performance level 1*
Individual contacts[1)]	AWG 22-18 0.33-0.82	09 67 000 3576	09 67 000 3476	09 67 000 3676
	AWG 24-20 0.25-0.52	09 67 000 8576	09 67 000 8476	09 67 000 8676
	AWG 26-22 0.13-0.33	09 67 000 5576	09 67 000 5476	09 67 000 5676
	AWG 28-24 0.09-0.25	09 67 000 7576	09 67 000 7476	09 67 000 7676

[1)] Minimum order 100 pieces or multiples of 100

Male contacts

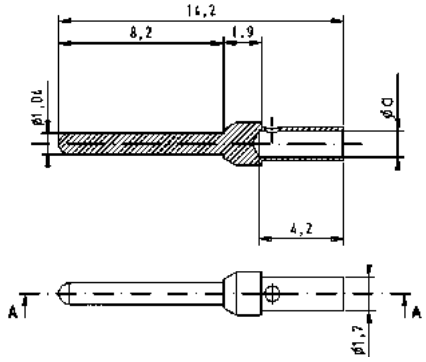

	a	groove
AWG 22-18	1.34	none
AWG 24-20	1.13	1
AWG 26-22	0.88	2
AWG 28-24	0.64	3

Female contacts

Standard

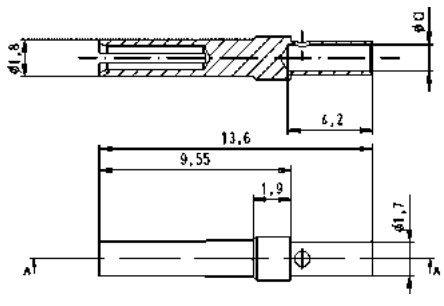

High-end with groove

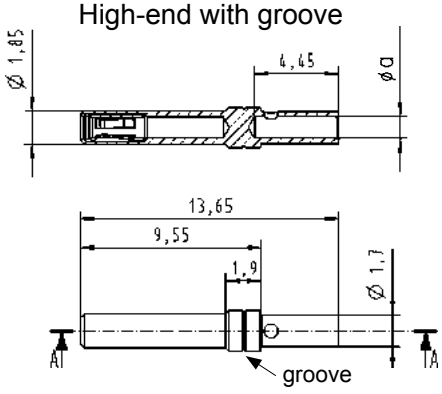

* Performance level 1 as per CECC 75301-802, 500 mating cycles, 10 days 4 mixed gas test – IEC 60512
Use crimp tool with the part no. 09 99 000 0501 and the locator with the part no. 09 99 000 0531. Details see chapter 20

Stamped crimp contacts

Identification	Wire gauge (mm^2)	Part number		
Performance levels ▶ Explanations see page 05.04 Other performance levels on request		stamped male contacts		
		Performance level 3	Performance level 2	Performance level 1
Individual contacts	AWG 28-24 0.09-0.25 stranded	09 67 000 7177[1)]	09 67 000 7178[1)]	09 67 000 7176[1)]
500 pieces/reel				
Unrolling left		09 67 000 7167	09 67 000 7168	09 67 000 7166
10 000 pieces/reel				
Unrolling left		09 67 000 7157	09 67 000 7158	09 67 000 7156
Unrolling left reversed		09 67 000 7147	09 67 000 7148	09 67 000 7146
Unrolling right reversed		09 67 000 7137	09 67 000 7138	09 67 000 7136
Individual contacts	AWG 24-20 0.25-0.56 stranded	09 67 000 8177[1)]	09 67 000 8178[1)]	09 67 000 8176[1)]
500 pieces/reel				
Unrolling left		09 67 000 8167	09 67 000 8168	09 67 000 8166
10 000 pieces/reel				
Unrolling left		09 67 000 8157	09 67 000 8158	09 67 000 8156
Unrolling left reversed		09 67 000 8147	09 67 000 8148	09 67 000 8146
Unrolling right reversed		09 67 000 8137	09 67 000 8138	09 67 000 8136

Unrolling direction

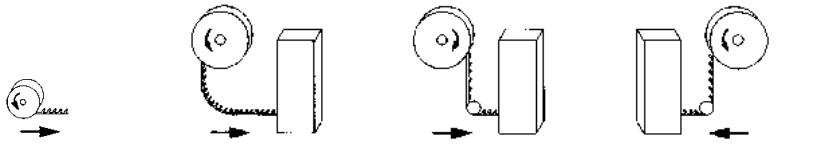

500 pieces/reel Unrolling left	10 000 pieces/reel Unrolling left	10 000 pieces/reel Unrolling left reversed	10 000 pieces/reel Unrolling right reversed

for HARTING tools

[1)] Minimum order 500 pieces or multiples of 500

Insertion and removal tool see chapter 20

Contact dimensions see page 05.29

Stamped crimp contacts

Identification	Drawing	Dimensions in mm

Male contacts

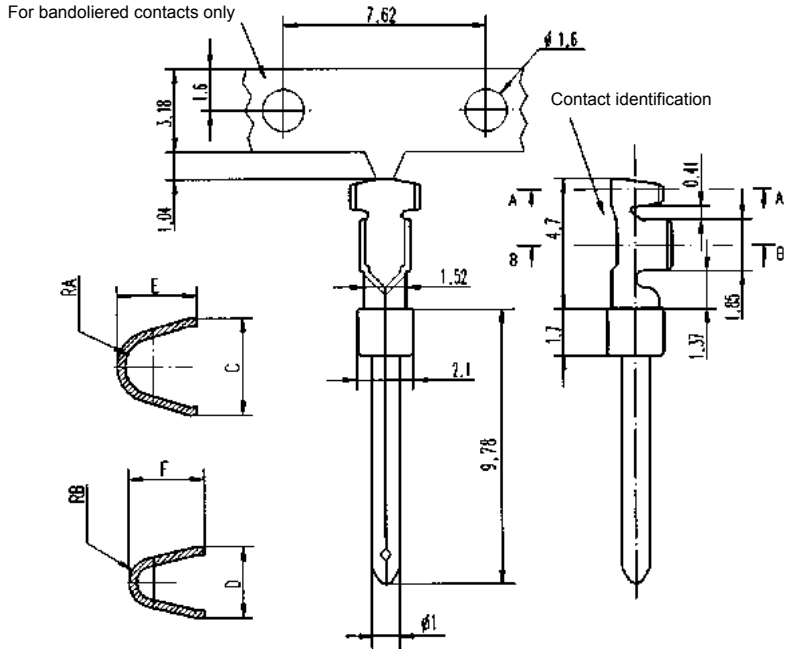

AWG	C	D	E	F	RA	RB	Contact identification
20-24	2.46	1.78	1.98	1.90	0.71	0.43	——
24-28	1.65	1.47	1.52	1.52	0.50	0.33	====

Stamped crimp contacts

Identification	Wire gauge (mm^2)	Part number		
Performance levels ▶ Explanations see page 05.04 Other performance levels on request		stamped female contacts		
		Performance level 3	Performance level 2	Performance level 1
Individual contacts	AWG 28-24 0.09-0.25 stranded	09 67 000 7277[1)]	09 67 000 7278[1)]	09 67 000 7276[1)]
500 pieces/reel				
Unrolling left		09 67 000 7267	09 67 000 7268	09 67 000 7266
10 000 pieces/reel				
Unrolling left		09 67 000 7257	09 67 000 7258	09 67 000 7256
Unrolling left reversed		09 67 000 7247	09 67 000 7248	09 67 000 7246
Unrolling right reversed		09 67 000 7237	09 67 000 7238	09 67 000 7236
Individual contacts	AWG 24-20 0.25-0.56 stranded	09 67 000 8277[1)]	09 67 000 8278[1)]	09 67 000 8276[1)]
500 pieces/reel				
Unrolling left		09 67 000 8267	09 67 000 8268	09 67 000 8266
10 000 pieces/reel				
Unrolling left		09 67 000 8257	09 67 000 8258	09 67 000 8256
Unrolling left reversed		09 67 000 8247	09 67 000 8248	09 67 000 8246
Unrolling right reversed		09 67 000 8237	09 67 000 8238	09 67 000 8236

Unrolling direction

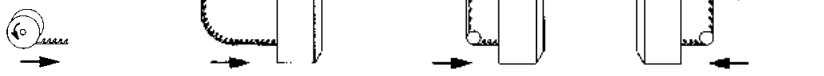

500 pieces/reel Unrolling left

10 000 pieces/reel Unrolling left

10 000 pieces/reel Unrolling left reversed

10 000 pieces/reel Unrolling right reversed

for HARTING tools

[1)] Minimum order 500 pieces or multiples of 500
Insertion and removal tool see chapter 20
Contact dimensions see page 05.31

Stamped crimp contacts

Identification	Drawing	Dimensions in mm

Female contacts

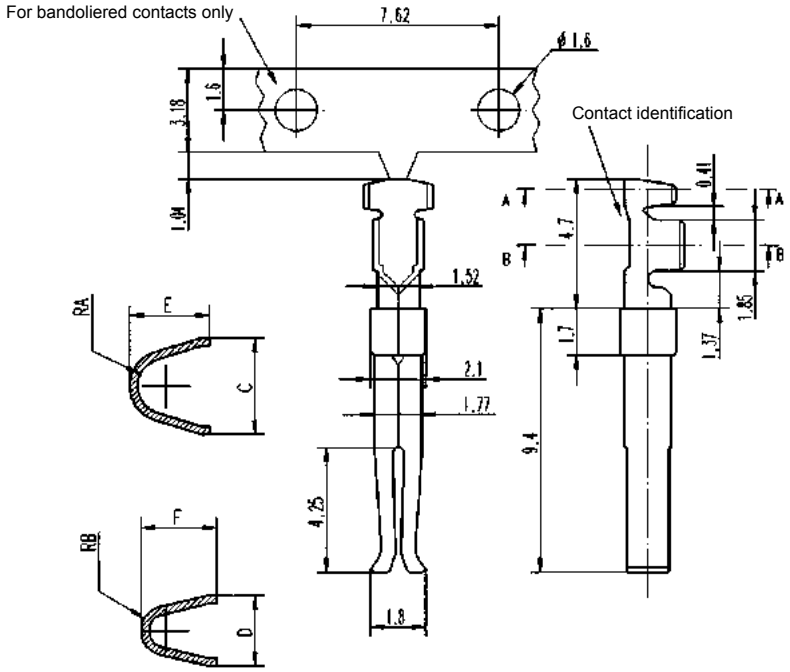

AWG	C	D	E	F	RA	RB	Contact identification
20-24	2.46	1.78	1.98	1.90	0.71	0.43	——
24-28	1.65	1.47	1.52	1.52	0.50	0.33	====

Number of contacts

9–37

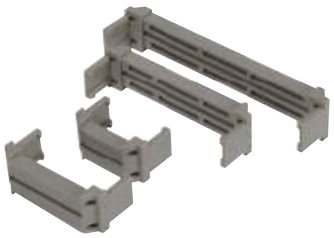

Insulation displacement termination

Identification	No. of contacts	Part number	
Performance levels ▶ Explanations see page 05.04 Other performance levels on request		Performance level 3	Performance level 2
Male connector[2] pitch 1.27 mm metal shell with dimples	9	09 66 128 770 .	09 66 128 670 .
	15	09 66 228 770 .	09 66 228 670 .
	25	09 66 328 770 .	09 66 328 670 .
	37	09 66 428 770 .	09 66 428 670 .
Female connector pitch 1.27 mm metal shell	9	09 66 118 750 .	09 66 118 650 .
	15	09 66 218 750 .	09 66 218 650 .
	25	09 66 318 750 .	09 66 318 650 .
	37	09 66 418 750 .	09 66 418 650 .
Please insert digit for flange thread ø 3.1 mm hole ▶ 0 M3 ▶ 1[1] 4-40 UNC ▶ 2			
Strain relief clamp plastic for male and female connector	9	09 66 108 0001	09 66 108 0001
	15	09 66 208 0001	09 66 208 0001
	25	09 66 308 0001	09 66 308 0001
	37	09 66 408 0001	09 66 408 0001

[1] Not normally kept in stock
[2] Not released for halogen free flat cables

Number of contacts

9–37

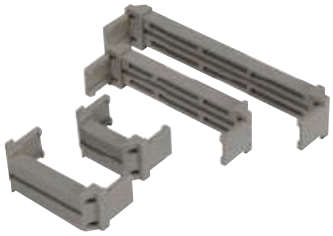

Insulation displacement termination

Identification	Drawing	Dimensions in mm

Male connector

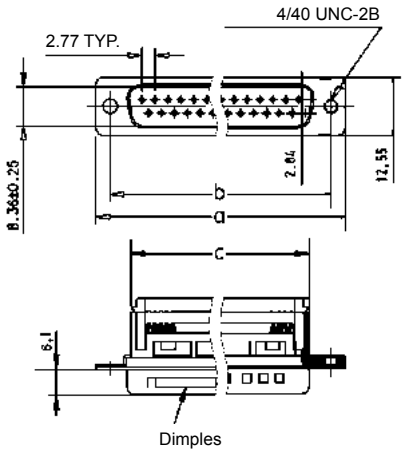

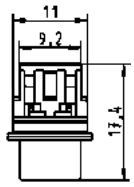

Ø 3.1 mm hole

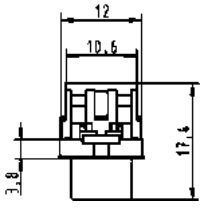

M3 or 4-40 UNC thread

Female connector

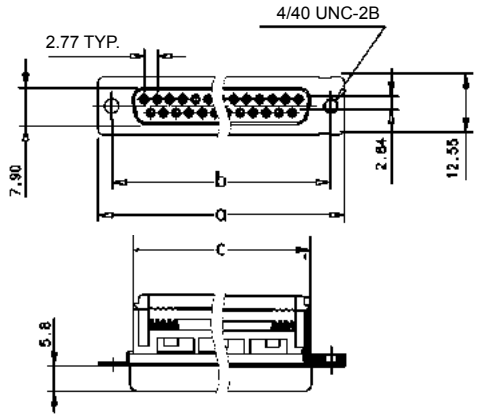

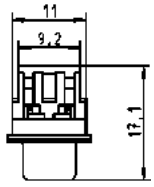

Ø 3.1 mm hole

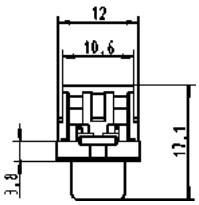

M3 or 4-40 UNC thread

Male and female connectors

	a	$b_{\pm 0.1}$	c
9	30.8	24.99	16.5
15	39.2	33.32	24.3
25	53.1	47.04	38.1
37	69.4	63.50	54.9

Specified conductors
stranded wires – AWG 28/7
– AWG 26/7

Strain relief clamps

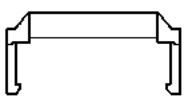

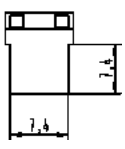

Top entry

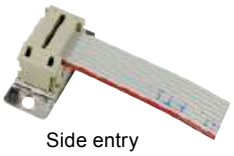

Side entry

Panel cut out for front/rear mount

Values are taken from the CECC 75301-802

see page 05.24

Tooling see chapter 20

Mating conditions see page 05.04
Mounting details see page 05.24

Number of contacts

9–50

Solder buckets

Identification	No. of contacts	Part number	
Performance levels Explanations see page 05.04 Other performance levels on request		Performance level 3	Performance level 2
Male connector metal shell with dimples			
		turned contacts	turned contacts
	9	09 67 009 5604	09 67 009 5615
	15	09 67 015 5604	09 67 015 5615
	25	09 67 025 5604	09 67 025 5615
	37	09 67 037 5604	09 67 037 5615
	50	09 67 050 5604	09 67 050 5615
		stamped contacts	stamped contacts
	9	09 67 209 5604	09 67 209 5615
	15	09 67 215 5604	09 67 215 5615
	25	09 67 225 5604	09 67 225 5615
	37	09 67 237 5604	09 67 237 5615
	50	09 67 250 5604	09 67 250 5615
Female connector metal shell			
		turned contacts	turned contacts
	9	09 67 009 4704	09 67 009 4715
	15	09 67 015 4704	09 67 015 4715
	25	09 67 025 4704	09 67 025 4715
	37	09 67 037 4704	09 67 037 4715
	50	09 67 050 4704	09 67 050 4715
		stamped contacts	stamped contacts
	9	09 67 209 4704	09 67 209 4715
	15	09 67 215 4704	09 67 215 4715
	25	09 67 225 4704	09 67 225 4715
	37	09 67 237 4704	09 67 237 4715
	50	09 67 250 4704	09 67 250 4715

Number of contacts

9–50

Solder buckets

Identification	Drawing	Dimensions in mm

Male connector

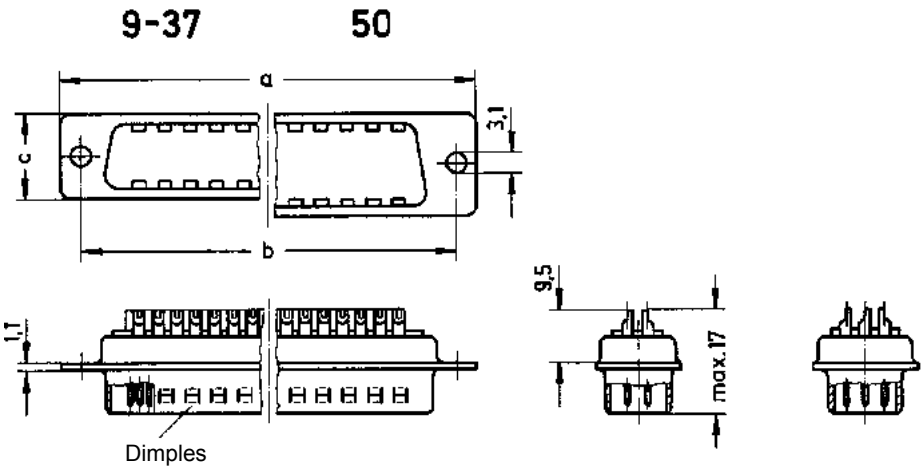

Female connector

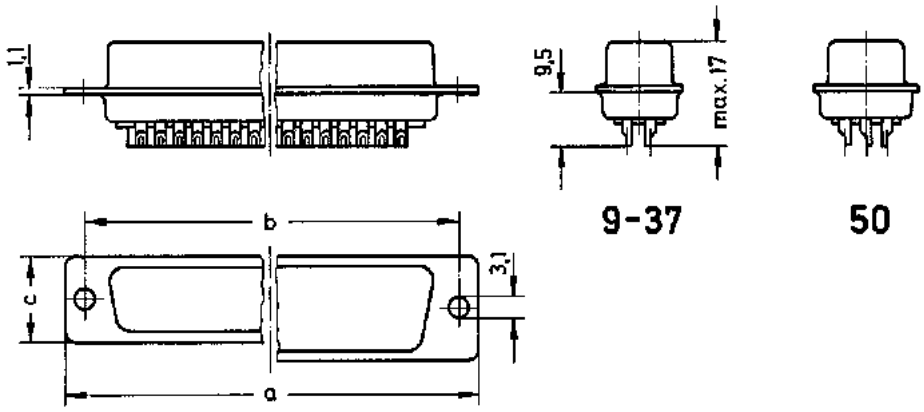

	a	$b_{\pm 0.1}$	c
9	30.9	25.0	12.5
15	39.2	33.3	12.5
25	53.1	47.0	12.5
37	69.4	63.5	12.5
50	67.0	61.1	15.4

Panel cut out
for front/rear mount

Values are taken from the CECC 75301-802

see page 05.24

Mating conditions see page 05.04

Number of contacts

9–37

Gender changer

Identification	No. of contacts	Part number
Male / female gender changer	9	09 67 009 0605
	15	09 67 015 0605
	25	09 67 025 0605
	37	09 67 037 0605

Dimensions

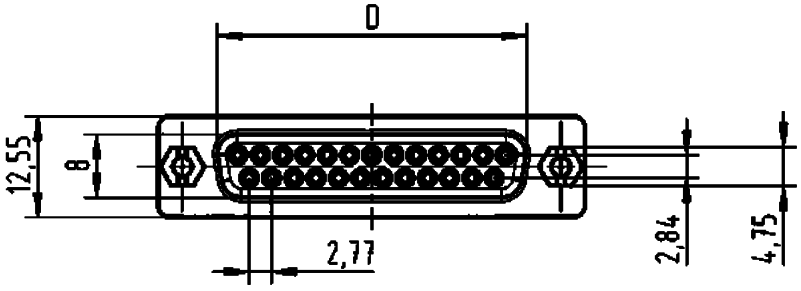

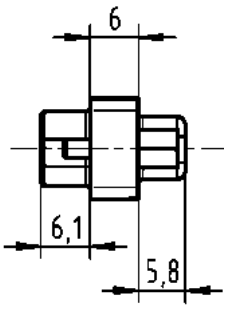

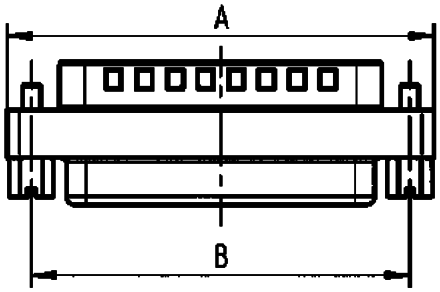

	A	B	C	D
9	30.8	25.0	16.92	16.35
15	39.2	33.3	25.25	24.7
25	53.05	47.04	38.96	38.4
37	69.4	63.5	55.42	54.8

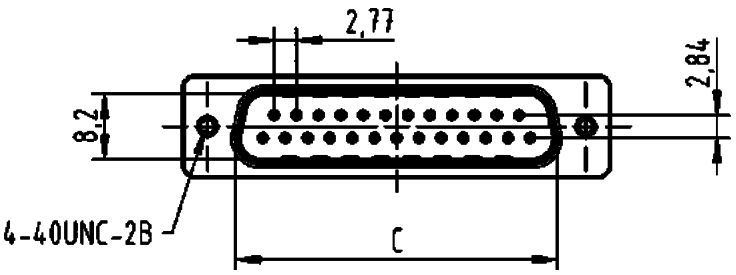

Dimensions in mm

Notes

Number of contacts	15, 26, 44, 62, 78
Working current Stamped contacts	2 A max.
Test voltage $U_{r.m.s.}$	1 kV
Clearance and creepage	≥ 1.0 mm
Contact resistance	< 20 mΩ < 25 mΩ (for right angled versions)
Insulation resistance	≥ 5 x 10^9 Ω
Temperature range The higher temperature limit includes the local ambient and heating effect of the contacts under load	-40 °C … + 85 °C
Terminations	a) Solder pins Ø 0.65 mm for P.C.B. holes Ø 1.0 mm b) Crimp contacts AWG 26 - 24 0.14 - 0.22 mm² max. insulation Ø 1.38 mm c) Solder cups AWG 24
Materials Mouldings and hoods	Thermoplastic resin, glass-fibre filled (PBTP), UL 94-V0
Contacts	Copper alloy
Contact surface Contact zone	selectively plated according to performance level[1)]
Metal shell	Nickel plated steel
Mating force	15 way ≤ 46 N 26 way ≤ 77 N 44 way ≤ 127 N 62 way ≤ 177 N 78 way ≤ 222 N

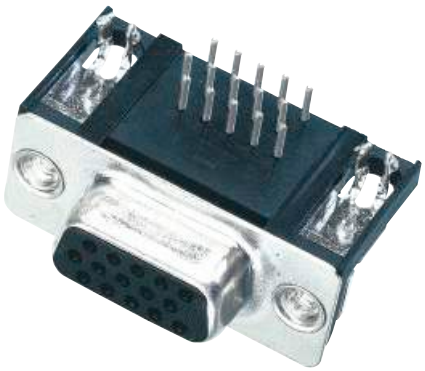

Number of contacts in the D-Sub standard/D-Sub high density range related to the shell size.

Shell size	D-Sub standard	D-Sub high density
1	9	15
2	15	26
3	25	44
4	37	62
5	50	78

[1)] Performance level 3, 50 mating cycles, no gas test
S4, plating = 0.76 µm (30 µinch) Au or PdNi equivalent

Number of contacts

15–78

High density crimp terminal

Identification	No. of contacts	Part number
Male connector	15	09 56 100 5601
Order contacts separately	26	09 56 200 5601
	44	09 56 300 5601
metal shell with dimples	62	09 56 400 5601
	78	09 56 500 5601
Female connector	15	09 56 100 4701
Order contacts separately	26	09 56 200 4701
	44	09 56 300 4701
metal shell	62	09 56 400 4701
	78	09 56 500 4701

Male connector

15-62 78

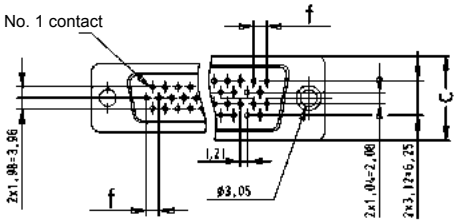

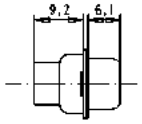

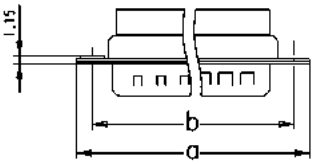

	a	b	c	f
15	30.9	25.0	12.5	2.29
26	39.2	33.3	12.5	2.29
44	53.1	47.0	12.5	2.29
62	69.4	63.5	12.5	2.41
78	67.0	61.1	15.4	2.41

Female connector

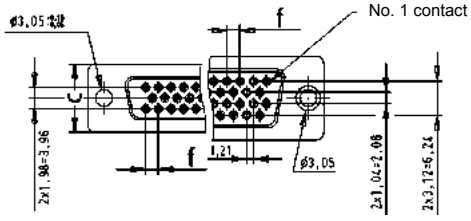

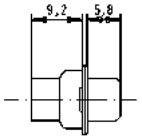

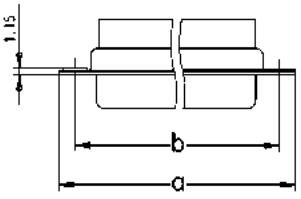

Panel cut out for front/rear mount

Values are taken from the CECC 75301-802

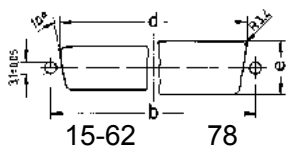

Front mount

	$b_{\pm 0.13}$	$d_{\pm 0.2}$	$e_{\pm 0.2}$
15	25.0	22.2	12.3
26	33.3	30.5	12.3
44	47.0	44.3	12.3
62	63.5	60.7	12.3
78	61.1	58.3	15.1

Rear mount

	$b_{\pm 0.13}$	$d_{\pm 0.2}$	$e_{\pm 0.2}$
15	25.0	20.5	11.4
26	33.3	28.8	11.4
44	47.0	42.5	11.4
62	63.5	59.1	11.4
78	61.1	56.3	14.1

Dimensions in mm

Tooling see chapter 20

Crimp contacts see page 05.40

Crimp contacts for high density connectors

Identification	Wire gauge (mm^2)	Part number			
Performance levels Explanations see page 05.04 Other performance levels on request		stamped male contacts		stamped female contacts	
		Performance level 3	S4[1)]	Performance level 3	S4[1)]
500 pieces/box	AWG 26-24 0.14-0.22 stranded	09 56 000 8177	09 56 000 8175	09 56 000 8277	09 56 000 8275
500 pieces/reel Unrolling left		09 56 000 8167	09 56 000 8165	09 56 000 8267	09 56 000 8265
10 000 pieces/reel Unrolling left		09 56 000 8157	09 56 000 8155	09 56 000 8257	09 56 000 8255

Unrolling direction

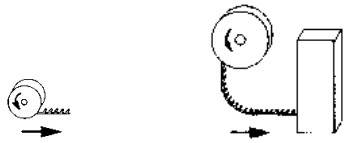

500 pieces/reel Unrolling left

10 000 pieces/reel Unrolling left

for HARTING tools

[1)] S4 = 0.76 µm (30 µinch) Au or PdNi equivalent
Contact dimensions see page 05.41

Crimp contacts for high density connectors

Identification	Drawing	Dimensions in mm

Male contacts
wire gauge AWG 26-24

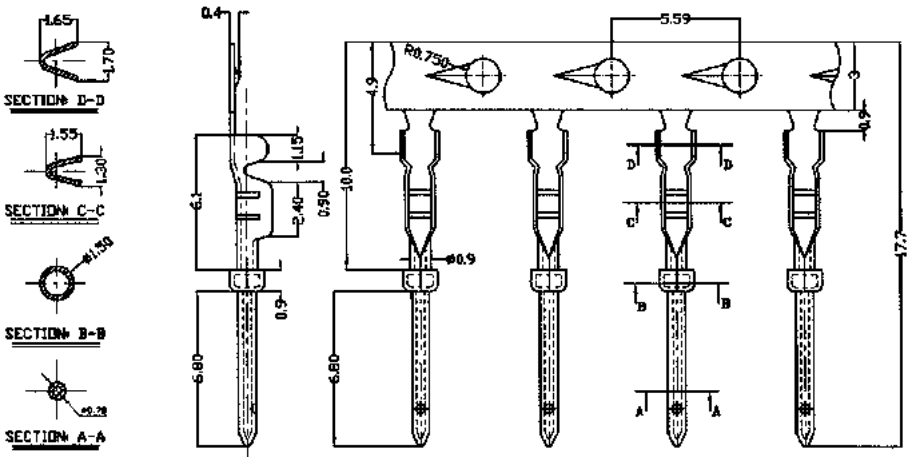

Female contacts
wire gauge AWG 26-24

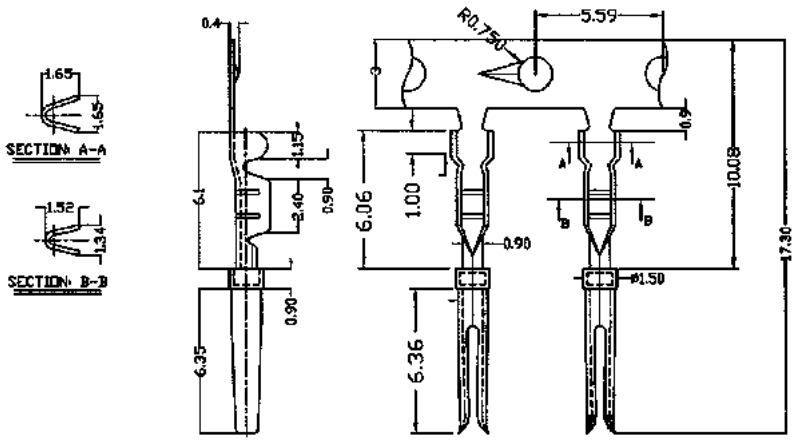

Number of contacts

15–78

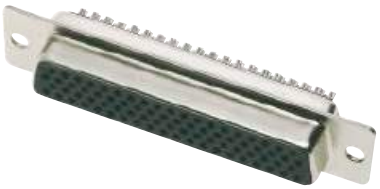

High density with stamped solder cups, straight

Identification	No. of contacts	Part number	
Performance levels Explanations see page 05.04 Other performance levels on request ▶		Performance level 3	S4[1)]
Male connector metal shell with dimples	15 26 44 62 78	09 56 100 5604 09 56 200 5604 09 56 300 5604 09 56 400 5604 09 56 500 5604	09 56 100 5615 050 09 56 200 5615 050 09 56 300 5615 050 09 56 400 5615 050 09 56 500 5615 050
Female connector metal shell	15 26 44 62 78	09 56 100 4704 09 56 200 4704 09 56 300 4704 09 56 400 4704 09 56 500 4704	09 56 100 4715 050 09 56 200 4715 050 09 56 300 4715 050 09 56 400 4715 050 09 56 500 4715 050

[1)] S4 = 0.76 µm (30 µinch) Au or PdNi equivalent

Number of contacts

15–78

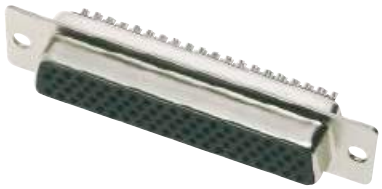

High density with stamped solder cups, straight

Identification	Drawing	Dimensions in mm

Male connector

15-62 78

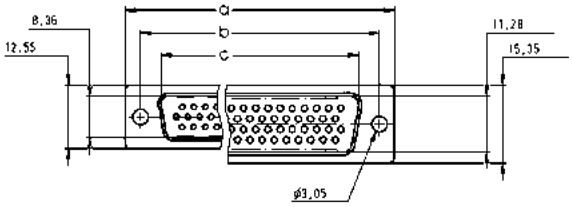

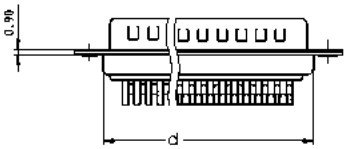

15-62

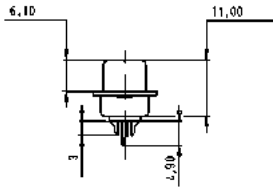

78

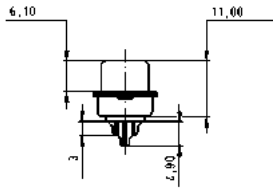

	a	b	c	d	e
15	30.81	25.00	16.92	19.20	16.33
26	39.20	33.30	25.25	27.70	24.70
44	53.05	47.00	38.96	41.10	38.40
62	69.40	63.50	55.42	57.30	54.80
78	67.00	61.00	52.81	55.10	52.20

Female connector

15-62 78

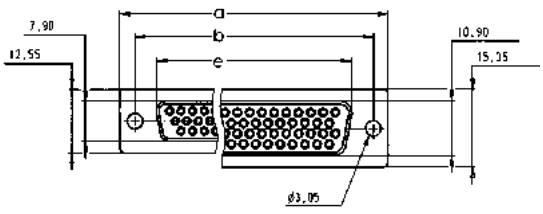

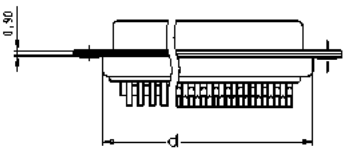

15-62

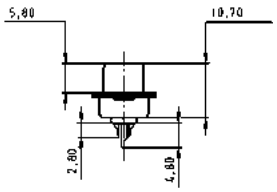

78

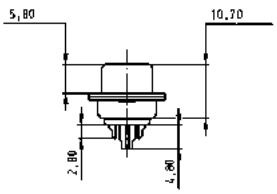

Number of contacts

15–78

High density with stamped solder pins, angled with grounding board locks

Identification	No. of contacts	Part number	
Performance levels ▶ Explanations see page 05.04 Other performance levels on request		Performance level 3	S4[1]
Male connector metal shell with dimples	15	09 56 162 781 .	09 56 162 581 .
	26	09 56 262 781 .	09 56 262 581 .
	44	09 56 362 781 .	09 56 362 581 .
	62	09 56 462 781 .	09 56 462 581 .
	78	09 56 562 781 .	09 56 562 581 .
Female connector metal shell	15	09 56 152 761 .	09 56 152 561 .
	26	09 56 252 761 .	09 56 252 561 .
	44	09 56 352 761 .	09 56 352 561 .
	62	09 56 452 761 .	09 56 452 561 .
	78	09 56 552 761 .	09 56 552 561 .
Please insert digit for flange thread or fitted female screw locks			
4-40 UNC ▶ 2			
fitted screw locks 4-40 UNC ▶ 3			

[1] S4 = 0.76 µm (30 µinch) Au or PdNi equivalent

Number of contacts

15–78

High density with stamped solder pins, angled with grounding board locks

Identification	Drawing	Dimensions in mm

Male connector

15-62 78

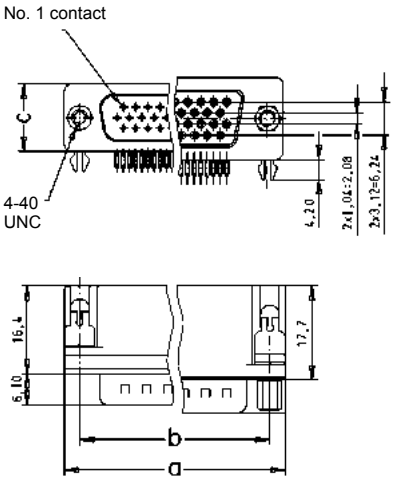

15-62

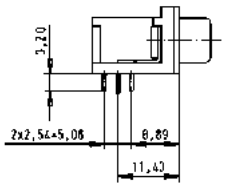

4-40 UNC

78

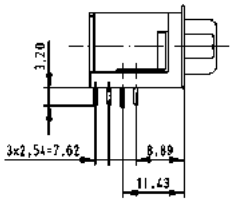

fitted screw locks
4-40 UNC

	a	$b_{\pm 0.1}$	c
15	30.81	24.99	12.55
26	39.20	33.30	12.55
44	53.05	47.04	12.55
62	69.40	63.50	12.55
78	67.00	61.00	15.37

Female connector

15-62 78

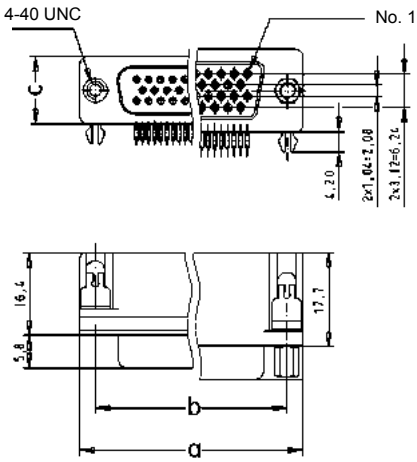

15-62

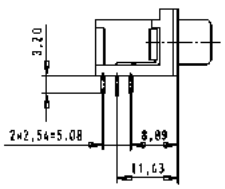

4-40 UNC

78

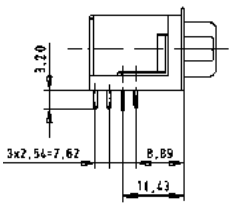

fitted screw locks
4-40 UNC

Number of contacts

15–78

High density with stamped solder pins, angled with grounding board locks

Identification	Drawing	Dimensions in mm

Board drillings

male 15

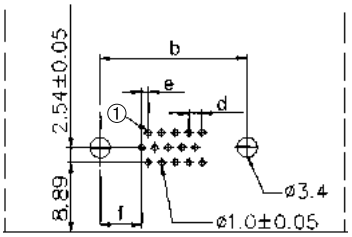

female 15

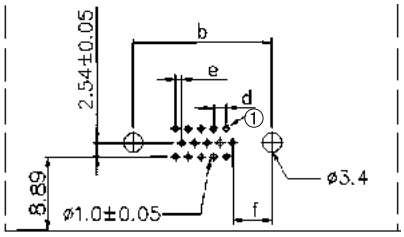

male 26-62

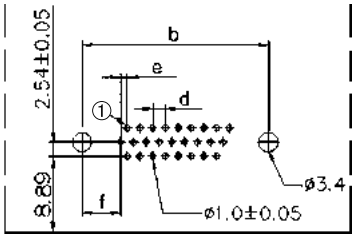

female 26-62

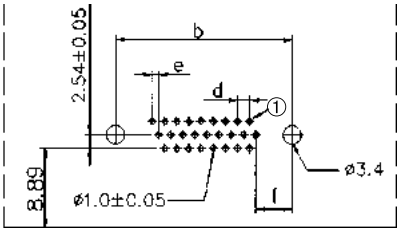

male 78

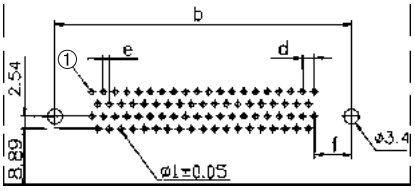

female 78

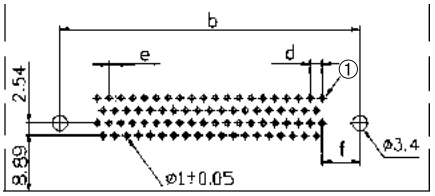

① = No. 1 contact

	$b_{\pm 0.1}$	d	e	f
15	24.99	2.29	1.145	7.04
26	33.30	2.29	1.145	6.88
44	47.04	2.29	1.145	6.88
62	63.50	2.41	1.205	7.00
78	61.00	2.41	1.205	7.65

Number of contacts

15–78

High density with stamped solder pins, straight

Identification	No. of contacts	Part number	
Performance levels Explanations see page 05.04 Other performance levels on request ▶		Performance level 3	S4[1]
Male connector metal shell with dimples	15	09 56 161 7700	09 56 161 5700
	26	09 56 261 7700	09 56 261 5700
	44	09 56 361 7700	09 56 361 5700
	62	09 56 461 7700	09 56 461 5700
	78	09 56 561 7700	09 56 561 5700
Female connector metal shell	15	09 56 151 7500	09 56 151 5500
	26	09 56 251 7500	09 56 251 5500
	44	09 56 351 7500	09 56 351 5500
	62	09 56 451 7500	09 56 451 5500
	78	09 56 551 7500	09 56 551 5500

Male connector

15-62 78 15-62 78

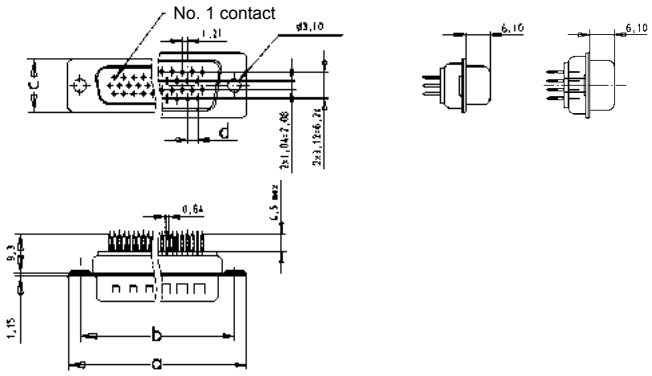

Female connector

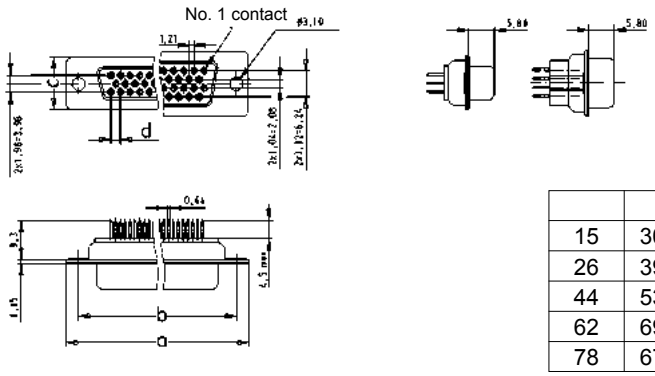

	a	b ±0.1	c	d
15	30.9	25.0	12.5	2.29
26	39.2	33.3	12.5	2.29
44	53.1	47.0	12.5	2.29
62	69.4	63.5	12.5	2.41
78	67.0	61.1	15.4	2.41

Board drillings

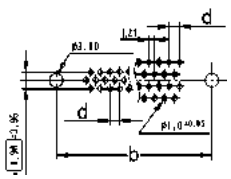

Dimensions in mm

[1] S4 = 0.76 µm (30 µinch) Au or PdNi equivalent

Number of contacts

15–78

High density with stamped solder pins, straight with grounding board locks

Identification	No. of contacts	Part number	
Performance levels Explanations see page 05.04 Other performance levels on request ▶		Performance level 3	S4[1]
Male connector metal shell with dimples	15	09 56 161 771 .	09 56 161 571 .
	26	09 56 261 771 .	09 56 261 571 .
	44	09 56 361 771 .	09 56 361 571 .
	62	09 56 461 771 .	09 56 461 571 .
	78	09 56 561 771 .	09 56 561 571 .
Female connector metal shell	15	09 56 151 751 .	09 56 151 551 .
	26	09 56 251 751 .	09 56 251 551 .
	44	09 56 351 751 .	09 56 351 551 .
	62	09 56 451 751 .	09 56 451 551 .
	78	09 56 551 751 .	09 56 551 551 .
Please insert digit for flange thread or fitted female screw locks			
4-40 UNC ▶ 2			
fitted screw locks 4-40 UNC ▶ 3			

[1] S4 = 0.76 µm (30 µinch) Au or PdNi equivalent

Number of contacts

15–78

High density with stamped solder pins, straight with grounding board locks

Identification	Drawing	Dimensions in mm

Male connector

15-62 78

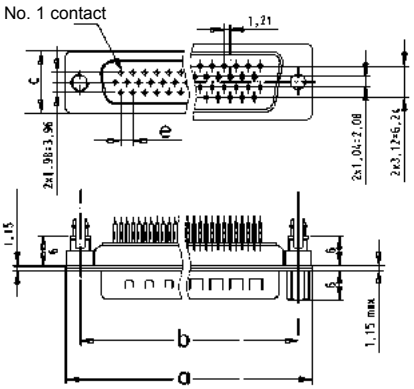

15-62

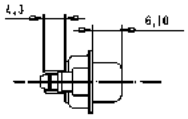

4-40 UNC

78

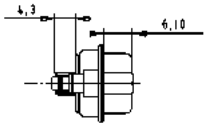

fitted screw locks
4-40 UNC

	a	b ±0.1	c	e
15	30.9	25.0	12.5	2.29
26	39.2	33.3	12.5	2.29
44	53.1	47.0	12.5	2.29
62	69.4	63.5	12.5	2.41
78	67.0	61.1	15.4	2.41

Female connector

15-62 78

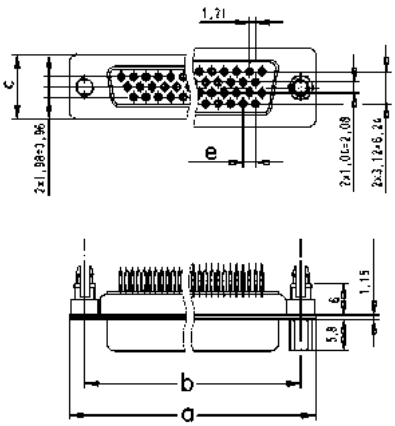

15-62

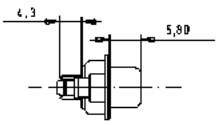

4-40 UNC

78

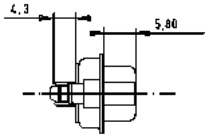

fitted screw locks
4-40 UNC

Board drillings

male 15-62

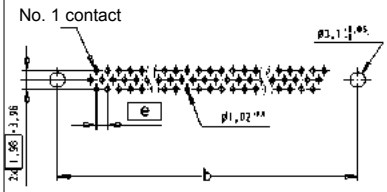

female 15-62

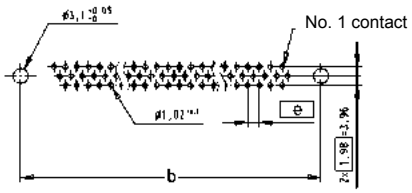

male 78

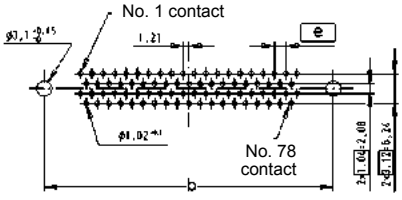

female 78

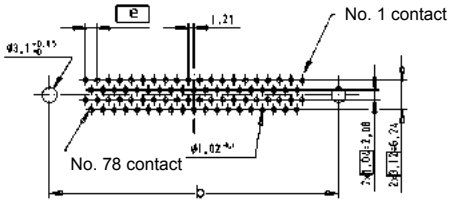

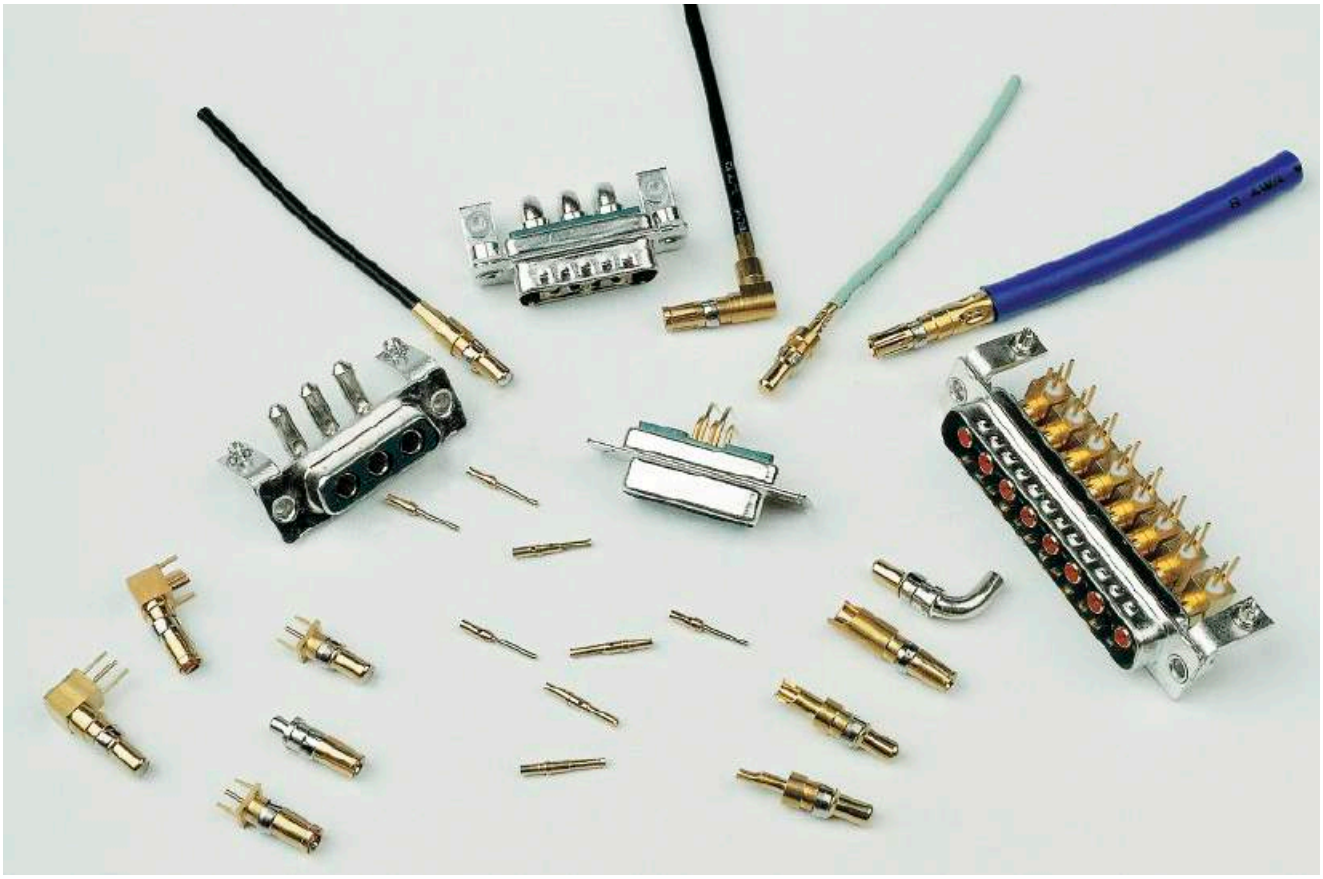

HARTINGs' mixed D-Sub range brings the advantage of an industry standard I/O interconnect product with the possibility to customise for any application.

The range is designed around ***the standard D-Sub shell sizes*** with ***the possibility to have a blend of contacts*** such as signals with coaxial, power, high voltage or pneumatic contacts. Due to its construction, the product is ***fully shielded*** and helps reducing the EMI/RFI leakage.

All contacts are machined with two different platings.

When hot plug-in is required, ***first mate last break*** contacts can also be supplied.

For connectors to be fitted on a board with SMT components, they can be supplied in an ***SMC (PiHIR) version*** which is assembled in the reflow solder process, thus reducing assembly cost.

In addition, a complete range of accessories such as clinch nut, spacers, board locks, female screw lock, etc. are available. For ***blind mating feature***, a specific high performance solution has been developed based on the combination of a floating plate and guiding pins providing up to 2.2 mm realignment capability. With all these accessories, the requirements of most applications are achievable and it makes this product range very attractive thanks to its versatility, reliability and cost effectiveness.

This blind mating concept is also achievable on the standard D as shown on the photo.

Contact arrangements

The table shows the standard range supported by HARTING. Two versions are special since they allow to mix in the same shell male and female contacts: 2W2C and 3W3C. The purpose of these versions is to have a 100 % mating proof feature (the insulator shape prevents a 180° reversed mating).

The structure of the connectors' identification is so that the left side digits give the total number of contacts and the right side digits the number of special contacts which can be either power, coaxial or high voltage style.
Example: 13W3 stands for 13 contacts in total with 10 signal contacts and 3 special contacts.

	Shell size	
2W2	1	
2W2C	1	
5W1	1	
3W3	2	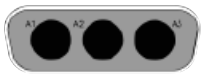
3W3C	2	
7W2	2	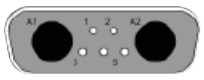
11W1	2	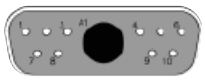
5W5	3	
9W4	3	
13W3	3	
17W2	3	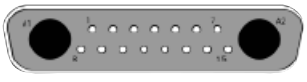
21W1	3	

	Shell size	
7W7	4	
8W8	4	
13W6	4	
21WA4	4	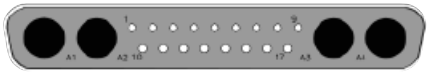
25W3	4	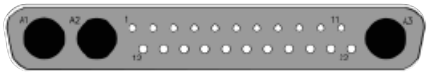
27W2	4	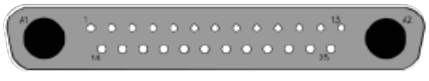
24W7	5	
36W4	5	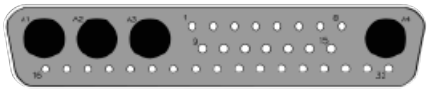
43W2	5	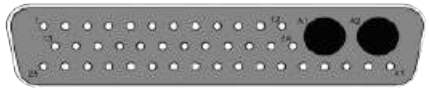

Note:
for any other layout please consult your HARTING representative.

Connectors for pcb applications – general information

The range of pcb connectors available at HARTING is summarised in the table under. For each of the basic connector versions, the available contact styles are documented with termination process, pitch, plating, rating for power contacts and impedance for coaxial contact etc..., as well as the accessory configuration.

Pcb connectors are delivered fully loaded thus providing a very good positioning of the contacts in their cavities for an easy and safe insertion of the pins in the pcb holes particularly crucial in the right angled versions.

Due to the numerous possibilities offered with the pcb connectors, suggested method is to contact your local HARTING representative to determine the part number to order; see customer request form on pages 05.88 and 05.89.

	Straight		Right angled	
Insulator body	• Standard • SMC: Solder Reflow Compatible		• Standard • SMC: Solder Reflow Compatible	
Signal contacts	**Solder termination** • Pitch: 2.84 mm • Plating: 0.76 µm Au over Ni • Pcb thickness from 1.6 to 3.2 mm		**Solder termination** • Pitch: 2.54 mm • Plating: 0.76 µm Au over Ni • Pcb thickness from 1.6 to 3.2 mm	
Power contacts	**Solder termination** • Rating: 20, 30, 40 A • Plating: 0.76 µm Au over Ni **Press-in termination** • Rating: 30 A • Plating: 0.76 µm Au over Ni		**Solder termination** • Rating: 20, 30, 40 A • Plating: 0.76 µm Au over Ni	
Coaxial contacts	**Solder termination** • 50 or 75 Ω • Plating: 1.3 µm Au over Ni inner conductor 0.76 µm Au over Ni outer ring		**Solder termination** • 50 or 75 Ω • Plating: 1.3 µm Au over Ni inner conductor 0.76 µm Au over Ni outer ring	
Accessories	Through hole		Metal bracket with board lock and through hole	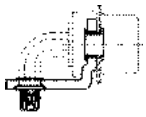
	Nut: M3 or UNC 4-40	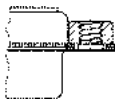	Metal bracket with board lock and clinch nut M3 or UNC 4-40	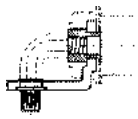
	Spacer: M3 or UNC 4-40		Metal bracket with board lock and female screw lock UNC 4-40	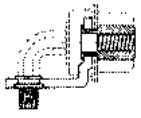
	Spacer (M3 or UNC 4-40) with board lock	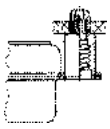		
	Spacer + board lock + female screw lock M3 or UNC 4-40	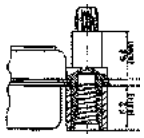		

Connectors for cable applications – general information

Two termination processes are available: crimp or solder

Shell		
Signal contacts	**Crimp termination** ● For wire gauge: AWG 20-24 or 26-28 ● Plating: 0.76 µm or 0.2 µm Au over Ni	**Pre-mounted solder cup contacts** ● Plating: 0.76 µm or 0.1 µm Au over Ni
Power contacts	**Crimp** ● Rating: 10, 20, 30, 40 A ● Plating: Mating side 0.76 µm or 0.2 µm Au Terminating side 0.2 µm Au **Solder cup** ● Rating: 10, 20, 30, 40 A ● Plating: Mating side 0.76 µm or 0.2 µm Au Terminating side 0.2 µm Au or 5 µm Sn	**Crimp** ● Rating: 10, 20, 30, 40 A ● Plating: Mating side 0.76 µm or 0.2 µm Au Terminating side 0.2 µm Au **Solder cup** ● Rating: 10, 20, 30, 40 A ● Plating: Mating side 0.76 µm or 0.2 µm Au Terminating side 0.2 µm Au or 5 µm Sn
Coaxial contacts[1)]	**Solder/crimp termination resp. Crimp/crimp termination** ● 50 or 75 Ω ● Plating: Mating side 1.3 µm or 0.2 µm Au inner conductor 0.76 µm or 0.2 µm Au outer ring Terminating side 1.3 µm or 0.2 µm Au inner conductor 0.2 µm Au or 5 µm Sn outer ring Ferrule 0.2 µm Au or 5 µm Sn ● Cables: RG 178, 179 …	**Solder/crimp termination resp. Crimp/crimp termination** ● 50 or 75 Ω ● Plating: Mating side 1.3 µm or 0.2 µm Au inner conductor 0.76 µm or 0.2 µm Au outer ring Terminating side 1.3 µm or 0.2 µm Au inner conductor 0.2 µm Au or 5 µm Sn outer ring Ferrule 0.2 µm Au or 5 µm Sn ● Cables: RG 178, 179 …
High voltage contacts	**Solder termination** ● Plating: 1.3 µm Au over Ni terminating and mating side	**Solder termination** ● Plating: 1.3 µm Au over Ni terminating and mating side

[1)] Coaxial contacts are provided in two versions:
- Inner conductor soldered and outer part crimped (solder/crimp termination)
- Both inner and outer part crimped (crimp/crimp termination); this version is recommended for medium or large size volume since crimping is faster than soldering.

Number of contacts	2, 3, 5, 7, 8, 9, 11, 13, 17, 21, 24, 25, 27, 36, 43
Approvals	DIN 41652, part 1
Working current	5 A for signal contacts
Temperature range The higher temperature limit includes the ambient and heating effect of the contacts under load	-55 °C … +125 °C
Materials	
Mouldings	Thermoplastic resin, glass-fibre filled (Polyester) UL 94-V0 color: green for standard black for crimp
Metal shell	Tin plated steel

Technical characteristics for special contacts see page 05.69

Number of contacts

7–27

Mixed shells with pre-mounted signal solder cup contacts

Identification	No. of contacts[1]	Part number			
		male connectors		female connectors	
		Performance level 3	S4[2]	Performance level 3	S4[2]
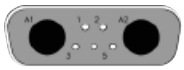	7W2	09 69 211 7072	09 69 211 5072	09 69 201 7072	09 69 201 5072
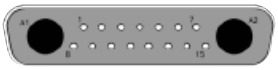	17W2	09 69 311 7172	09 69 311 5172	09 69 301 7172	09 69 301 5172
	21WA4	09 69 411 7214	09 69 411 5214	09 69 401 7214	09 69 401 5214
	27W2	09 69 411 7272	09 69 411 5272	09 69 401 7272	09 69 401 5272

Male connectors

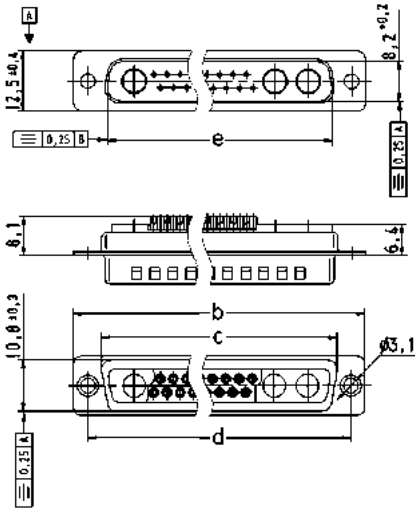

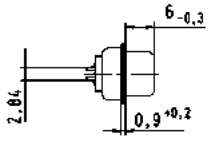

Solder cup termination for AWG 20 (0.5 mm²)

	a	b	c	d	e
7W2	24.6	39.1	27.5	33.30	25.2
17W2	38.3	53.0	41.3	47.04	38.9
21WA4	54.8	69.3	57.7	63.50	55.3
27W2	54.9	69.3	57.7	63.50	55.3

Female connectors

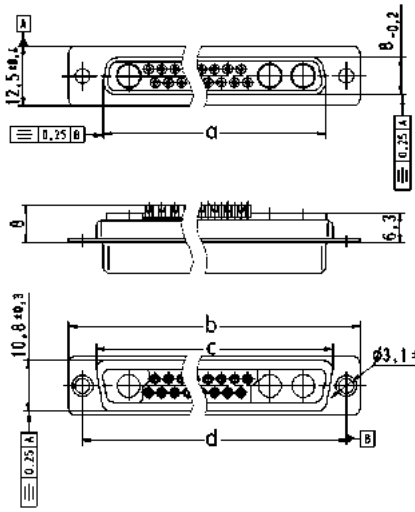

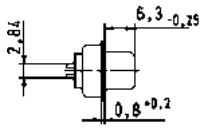

Solder cup termination for AWG 20 (0.5 mm²)

Dimensions in mm

[1] Explanations see page 05.51
[2] S4 = 0.76 µm Au or PdNi equivalent

Board drillings see pages 05.78 ff
Order special contacts separately. See pages 05.69 ff

Number of contacts

9–25

Mixed shells with pre-mounted signal solder cup contacts

Identification	No. of contacts[1]	Part number			
		male connectors		female connectors	
		Performance level 3	S4[2]	Performance level 3	S4[2]
	9W4	09 69 311 7094	09 69 311 5094	09 69 301 7094	09 69 301 5094
	13W3	09 69 311 7133	09 69 311 5133	09 69 301 7133	09 69 301 5133
	25W3	09 69 411 7253	09 69 411 5253	09 69 401 7253	09 69 401 5253

Male connectors

9W4

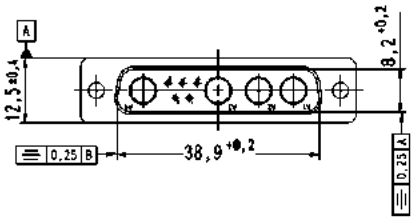

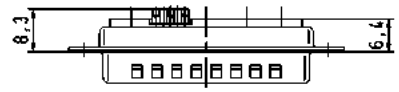

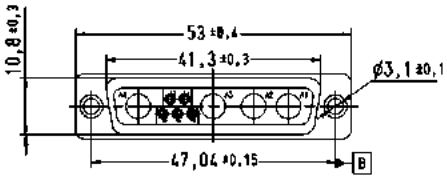

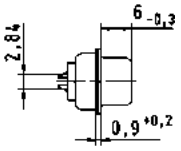

Solder cup termination for AWG 20 (0.5 mm²)

13W3, 25W3

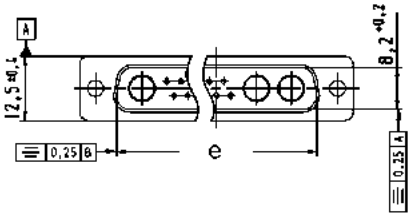

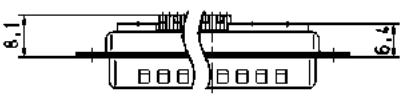

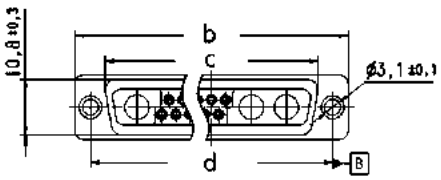

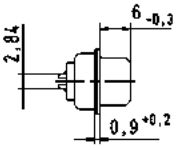

Solder cup termination for AWG 20 (0.5 mm²)

	b	c	d	e
13W3	53.0	41.3	47.04	38.90
25W3	69.3	57.7	63.50	49.84

Dimensions in mm

[1] Explanations see page 05.51
[2] S4 = 0.76 µm Au or PdNi equivalent
Board drillings see pages 05.78 ff

Drawings for female connectors see page 05.57
Order special contacts separately. See pages 05.69 ff

Number of contacts

9–25

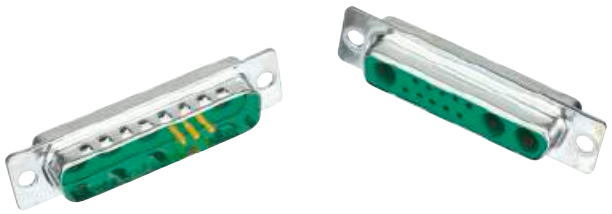

Mixed shells with pre-mounted signal solder cup contacts

Identification	Drawing	Dimensions in mm

Female connectors

9W4

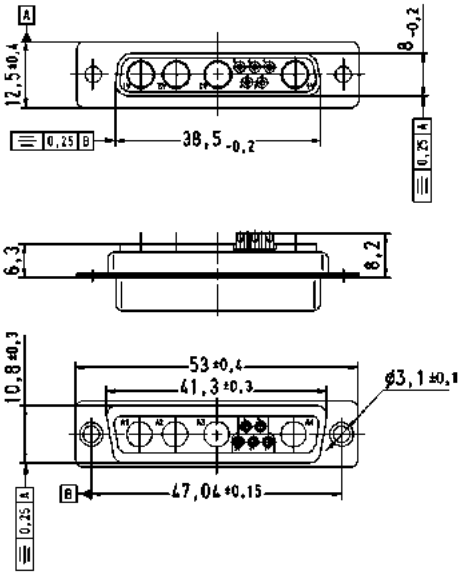

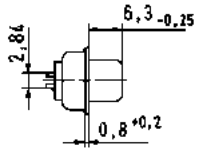

Solder cup termination for AWG 20 (0.5 mm²)

13W3, 25W3

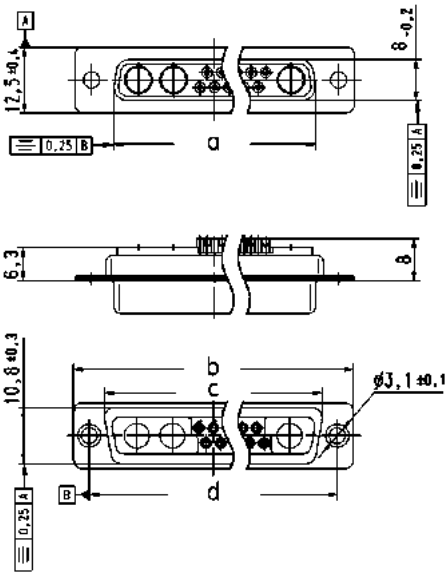

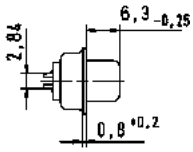

Solder cup termination for AWG 20 (0.5 mm²)

	a	b	c	d
13W3	38.3	53.0	41.3	47.04
25W3	54.9	69.3	57.7	63.50

Board drillings see pages 05.78 ff

Number of contacts

5–21

Mixed shells with pre-mounted signal solder cup contacts

Identification	No. of contacts[1]	Part number			
		male connectors		female connectors	
		Performance level 3	S4[2]	Performance level 3	S4[2]
	5W1	09 69 111 7051	09 69 111 5051	09 69 101 7051	09 69 101 5051
	11W1	09 69 211 7111	09 69 211 5111	09 69 201 7111	09 69 201 5111
	21W1	09 69 311 7211	09 69 311 5211	09 69 301 7211	09 69 301 5211

Male connectors

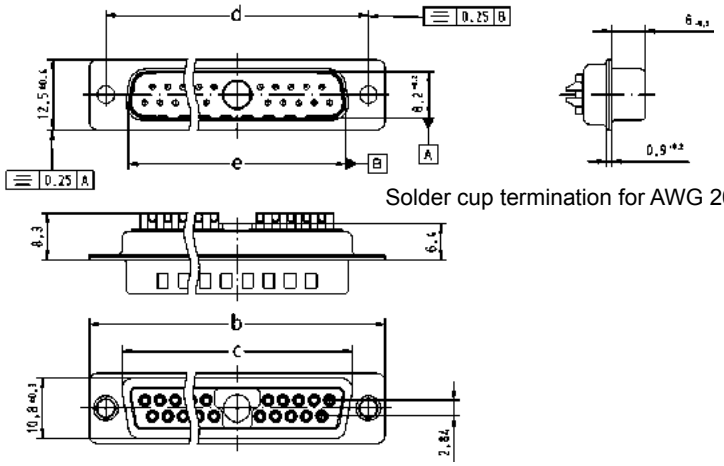

Solder cup termination for AWG 20 (0.5 mm²)

Female connectors

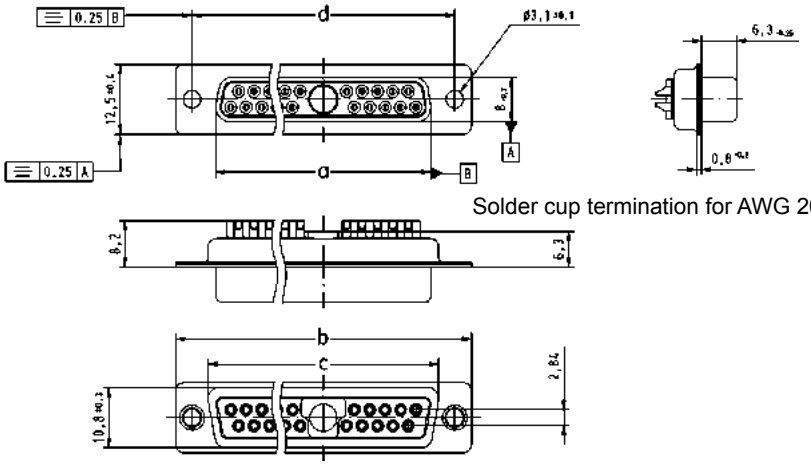

Solder cup termination for AWG 20 (0.5 mm²)

	a	b	c	d	e
5W1	16.4	30.8	19.3	25.00	16.9
11W1	24.7	39.1	27.5	33.30	25.2
21W1	38.5	53.0	41.3	47.04	38.9

Dimensions in mm

[1] Explanations see page 05.51
[2] S4 = 0.76 µm Au or PdNi equivalent
Board drillings see pages 05.78 ff

Order special contacts separately. See pages 05.69 ff

Number of contacts

13

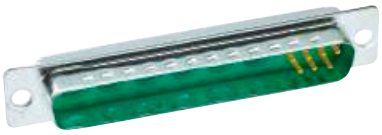

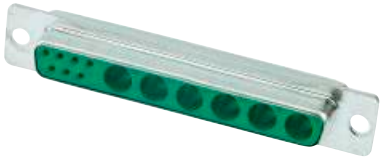

Mixed shells with pre-mounted signal solder cup contacts

Identification	No. of contacts[1]	Part number			
		male connectors		female connectors	
		Performance level 3	S4[2]	Performance level 3	S4[2]
	13W6	09 69 411 7136	09 69 411 5136	09 69 401 7136	09 69 401 5136

Male connectors

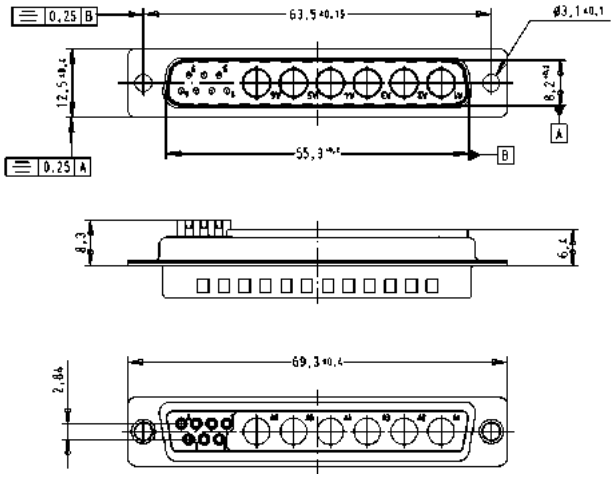

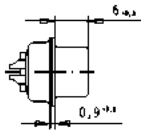

Solder cup termination for AWG 20 (0.5 mm²)

Female connectors

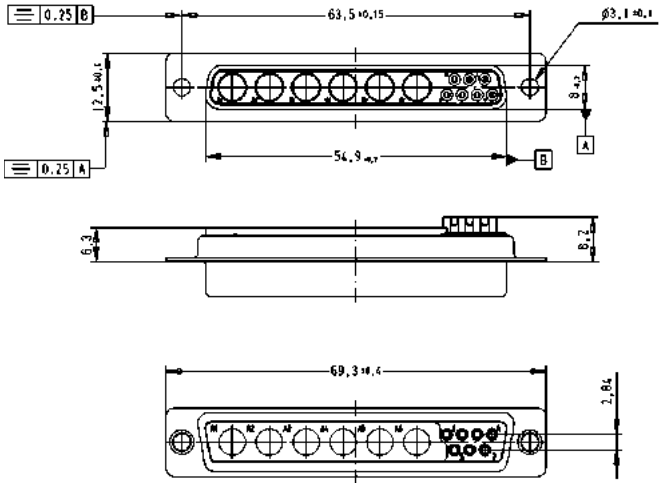

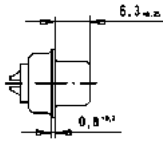

Solder cup termination for AWG 20 (0.5 mm²)

Dimensions in mm

[1] Explanations see page 05.51
[2] S4 = 0.76 µm Au or PdNi equivalent
Board drillings see pages 05.78 ff

Order special contacts separately. See pages 05.69 ff

Number of contacts

24

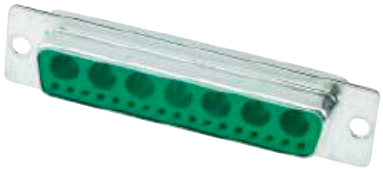

Mixed shells with pre-mounted signal solder cup contacts

Identification	No. of contacts[1]	Part number			
		male connectors		female connectors	
		Performance level 3	S4[2]	Performance level 3	S4[2]
	24W7	09 69 511 7247	09 69 511 5247	09 69 501 7247	09 69 501 5247

Male connectors

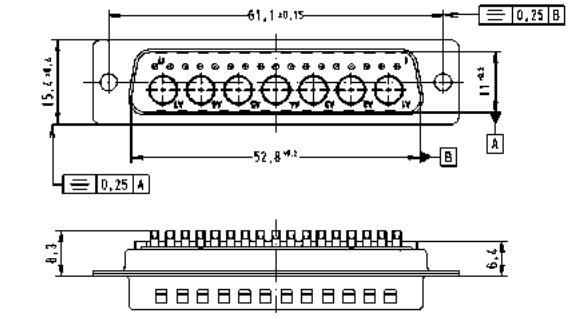

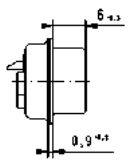

Solder cup termination for AWG 20 (0.5 mm²)

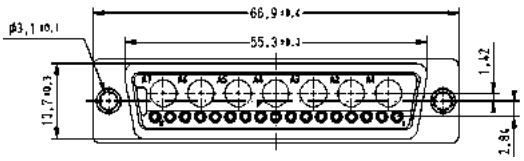

Female connectors

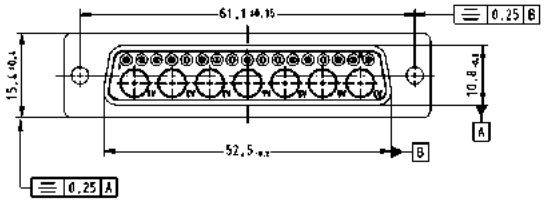

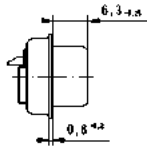

Solder cup termination for AWG 20 (0.5 mm²)

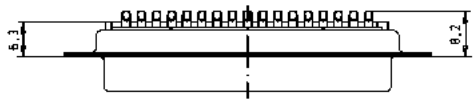

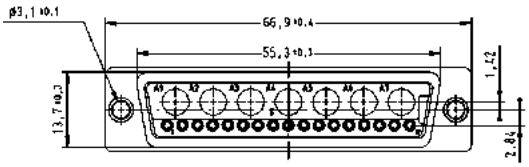

Dimensions in mm

[1] Explanations see page 05.51
[2] S4 = 0.76 µm Au or PdNi equivalent
Board drillings see pages 05.78 ff

Order special contacts separately. See pages 05.69 ff

Number of contacts

36–43

Mixed shells with pre-mounted signal solder cup contacts

Identification	No. of contacts[1]	Part number			
		male connectors		female connectors	
		Performance level 3	S4[2]	Performance level 3	S4[2]
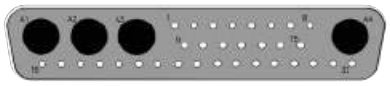	36W4	09 69 511 7364	09 69 511 5364	09 69 501 7364	09 69 501 5364
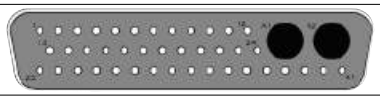	43W2	09 69 511 7432	09 69 511 5432	09 69 501 7432	09 69 501 5432

Male connectors

36W4

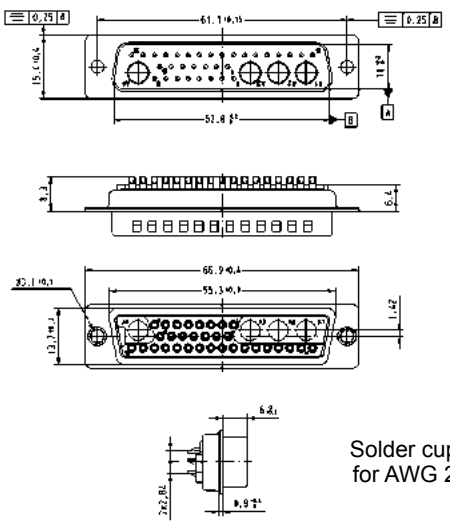

43W2

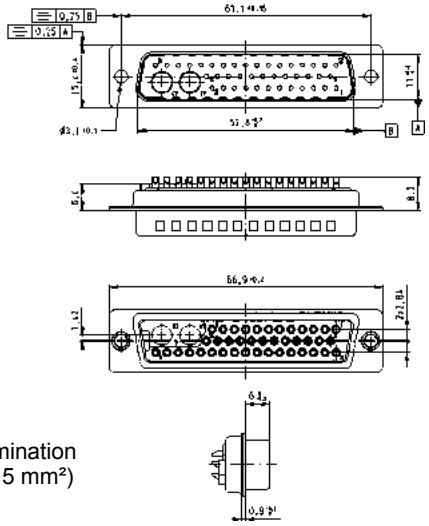

Solder cup termination for AWG 20 (0.5 mm²)

Female connectors

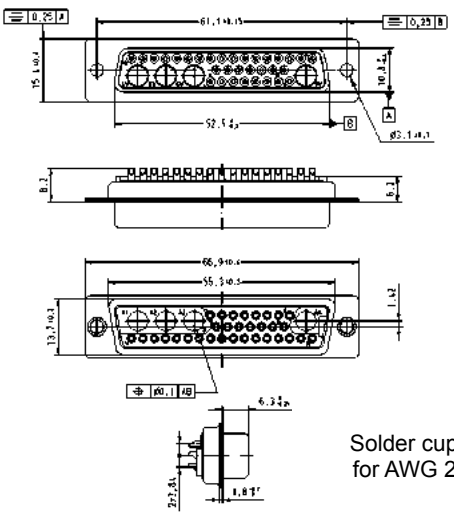

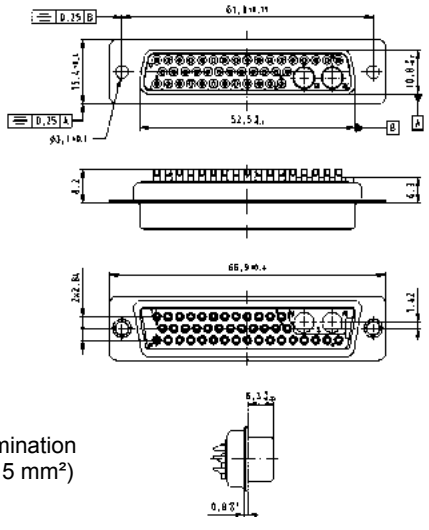

Solder cup termination for AWG 20 (0.5 mm²)

Dimensions in mm

[1] Explanations see page 05.51
[2] S4 = 0.76 µm Au or PdNi equivalent
Board drillings see pages 05.78 ff

Order special contacts separately. See pages 05.69 ff

Number of contacts

2–8

Shells without signal contacts for cable applications

Identification	No. of contacts[1]	Part number	
		male connectors	female connectors
	2W2	09 69 110 0522	09 69 100 0522
	3W3	09 69 210 0033	09 69 200 0033
	5W5	09 69 310 0055	09 69 300 0055
	7W7	09 69 410 0077	09 69 400 0077
	8W8	09 69 410 0088	09 69 400 0088

Male connectors

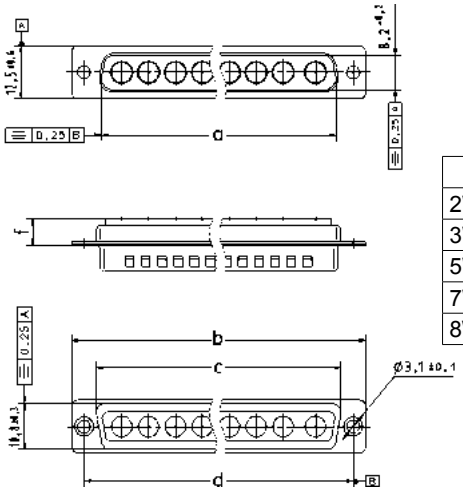

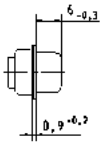

	a	b	c	d	e	f	g
2W2	16.9	30.8	–	25.00	16.4	8.7	8.6
3W3	25.2	39.1	27.5	33.30	24.6	6.4	6.3
5W5	38.9	53.0	41.3	47.04	38.3	6.4	6.3
7W7	55.3	69.3	57.7	63.50	54.9	6.4	6.3
8W8	55.3	69.3	57.7	63.50	54.8	6.4	6.3

Female connectors

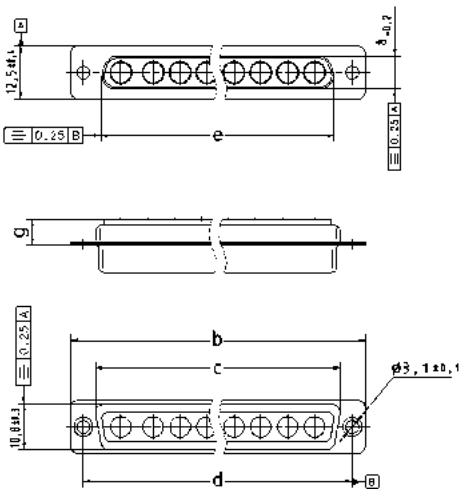

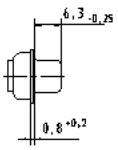

Dimensions in mm

[1] Explanations see page 05.51
Board drillings see pages 05.78 ff
Order special contacts separately. See pages 05.69 ff

Number of contacts

2

Coded shells without signal contacts for cable applications

Identification	No. of contacts[1)]	Part number	
		male connector	female connector
	2W2C	09 69 110 0022	09 69 100 0022

Male connectors

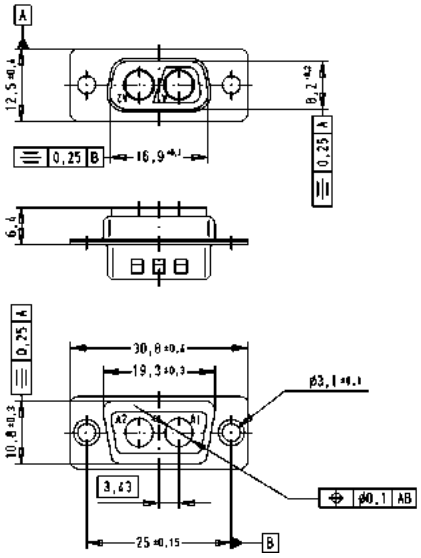

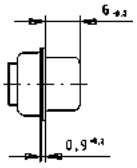

Female connectors

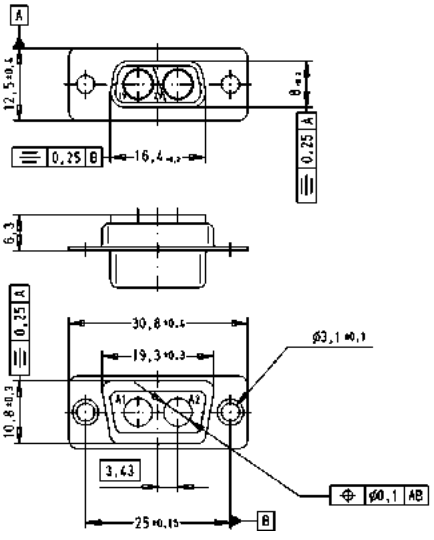

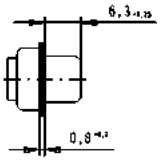

Dimensions in mm

[1)] Explanations see page 05.51
Board drillings see pages 05.78 ff
Order special contacts separately. See pages 05.69 ff

Number of contacts

3

Coded shells without signal contacts for cable applications

Identification	No. of contacts[1)]	Part number	
		male connector	female connector
	3W3C	09 69 210 0633	09 69 200 0633

Male connectors

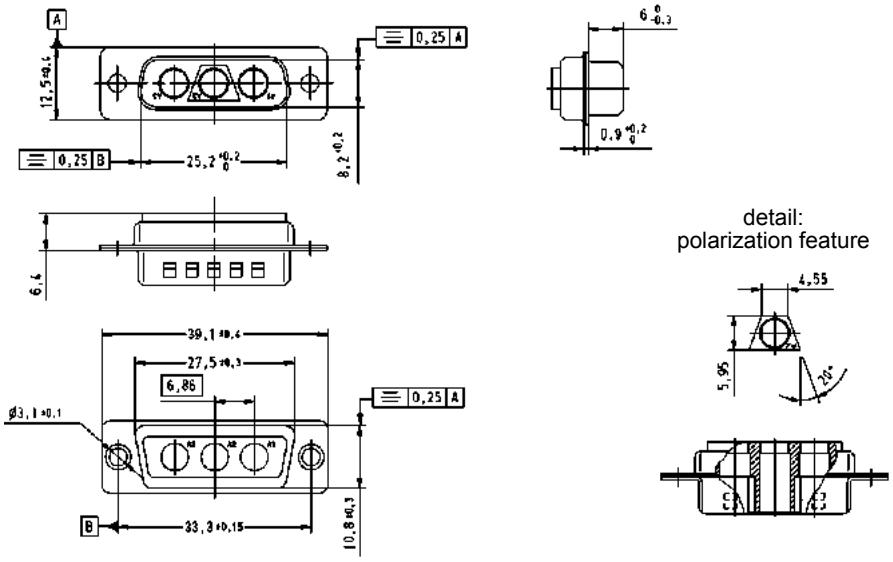

Female connectors

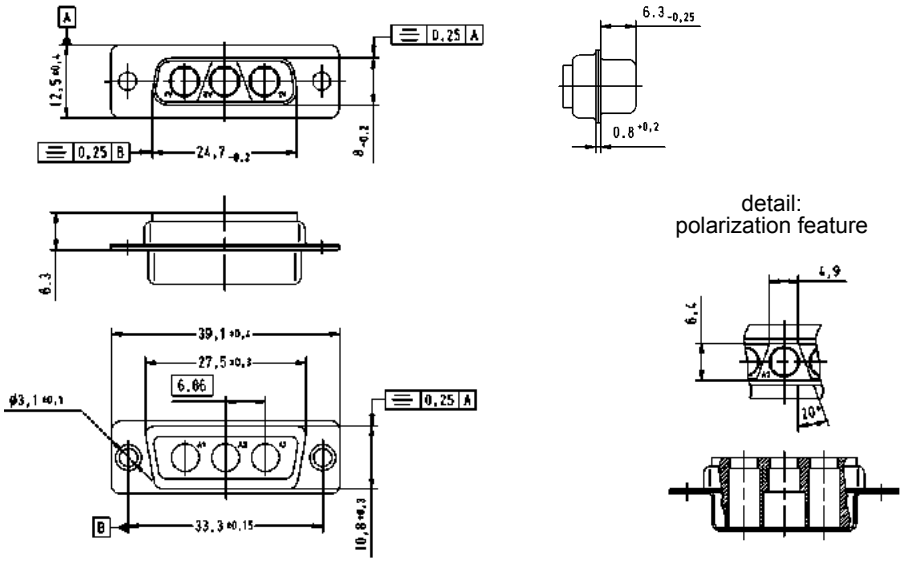

Dimensions in mm

[1)] Explanations see page 05.51
Board drillings see pages 05.78 ff
Order special contacts separately. See pages 05.69 ff

Number of contacts

7–27

Mixed shells for signal crimp contacts

Identification	No. of contacts[1)]	Part number	
		male connectors	female connectors
	7W2	09 69 212 0072	09 69 202 0072
	17W2	09 69 312 0172	09 69 302 0172
	21WA4	09 69 412 0214	09 69 402 0214
	27W2	09 69 412 0272	09 69 402 0272

Male connectors

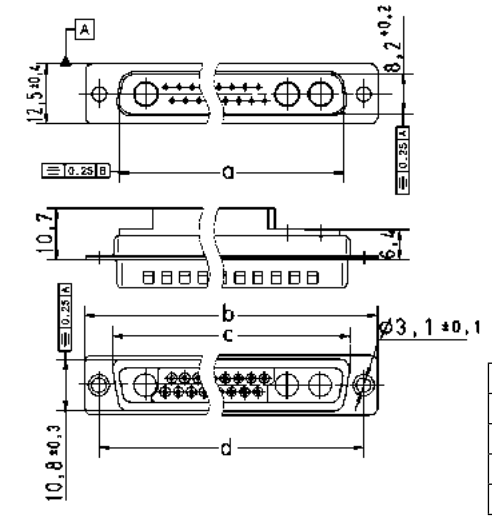

	a	b	c	d	e
7W2	25.2	39.1	27.5	33.30	24.7
17W2	38.9	53.0	41.3	47.04	38.5
21WA4	55.3	69.3	57.7	63.50	54.9
27W2	56.3	69.3	–	63.50	54.9

Female connectors

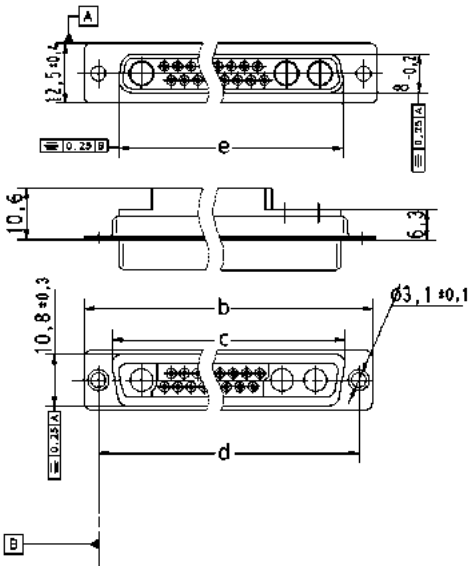

Dimensions in mm

[1)] Explanations see page 05.51
Board drillings see pages 05.78 ff
Order special contacts separately. See pages 05.69 ff

Number of contacts

13–25

Mixed shells for signal crimp contacts

Identification	No. of contacts[1]	Part number	
		male connectors	female connectors
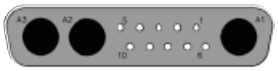	13W3	09 69 312 0133	09 69 302 0133
	25W3	09 69 412 0253	09 69 402 0253

Male connectors

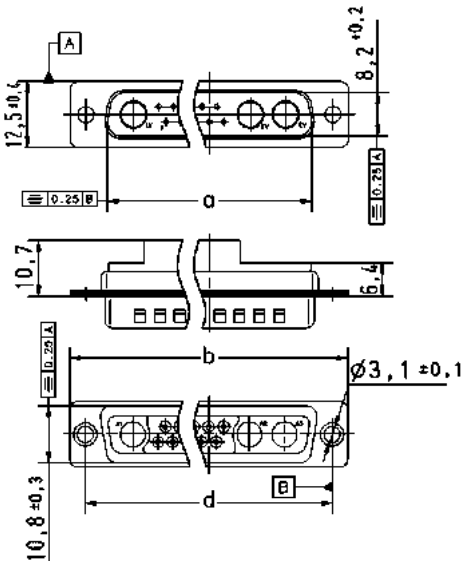

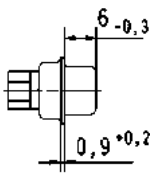

	a	b	d	e
13W3	38.9	53.0	47.04	38.5
25W3	55.3	69.3	63.50	54.9

Female connectors

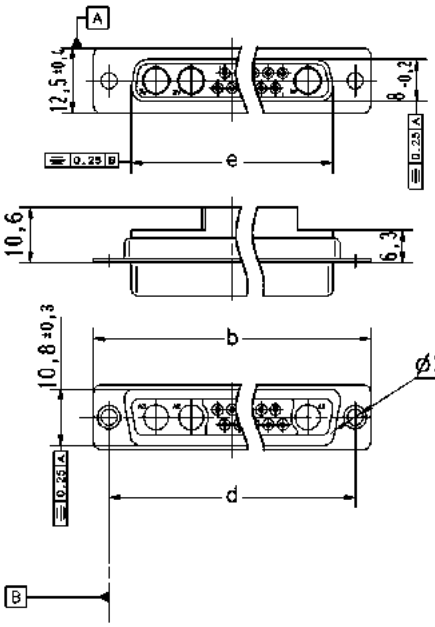

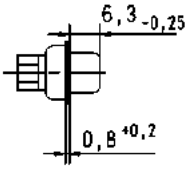

Dimensions in mm

[1] Explanations see page 05.51
Board drillings see pages 05.78 ff
Order special contacts separately. See pages 05.69 ff

Number of contacts

11–21

Mixed shells for signal crimp contacts

Identification	No. of contacts[1)]	Part number	
		male connectors	female connectors
	11W1	09 69 212 0111	09 69 202 0111
	21W1	09 69 312 0211	09 69 302 0211

Male connectors

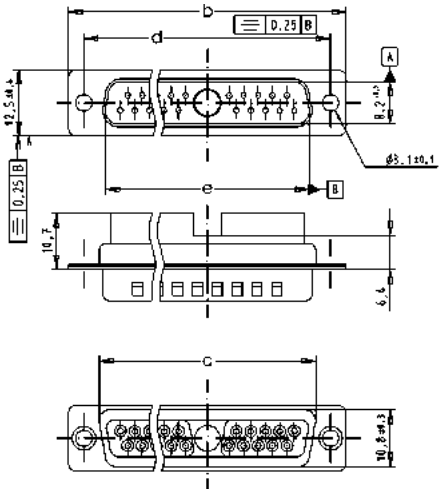

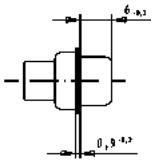

	a	b	c	d	e
11W1	24.7	39.1	27.5	33.30	25.2
21W1	38.5	53.0	41.3	47.04	38.9

Female connectors

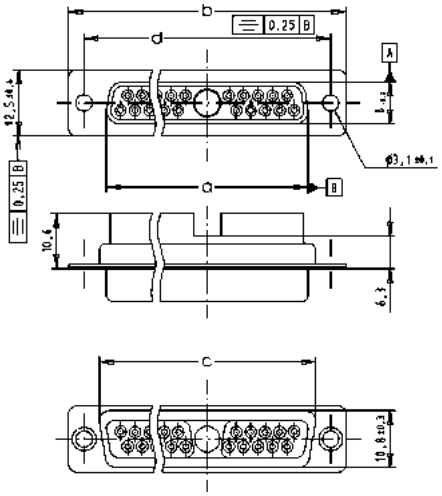

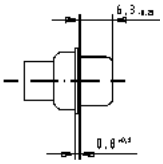

Dimensions in mm

[1)] Explanations see page 05.51
Order special contacts separately. See pages 05.69 ff
Board drillings see pages 05.78 ff

Number of contacts

36

Mixed shells for signal crimp contacts

Identification	No. of contacts[1]	Part number	
		male connector	female connector
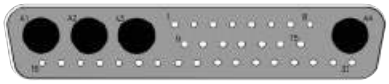	36W4	09 69 512 0364	09 69 502 0364

Male connectors

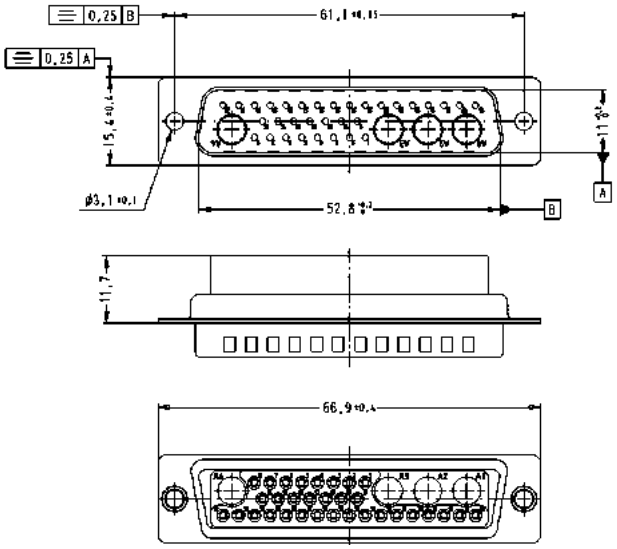

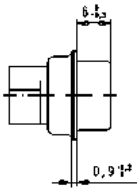

Female connectors

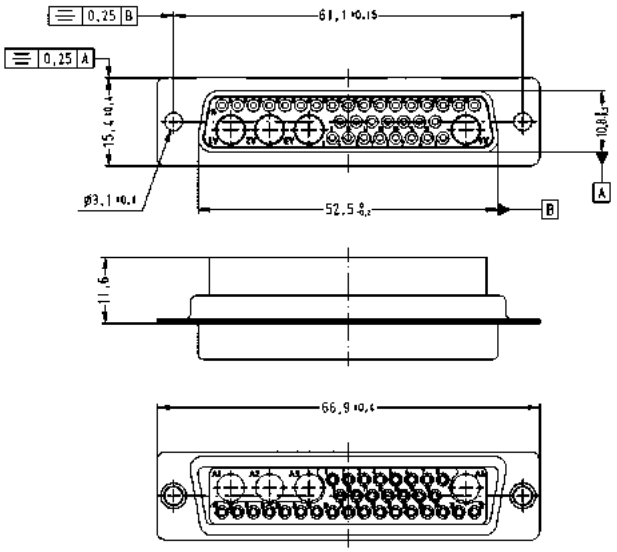

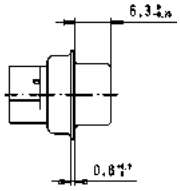

Dimensions in mm

[1] Explanations see page 05.51
Board drillings see pages 05.78 ff
Order special contacts separately. See pages 05.69 ff

	Signal contacts see page 05.70	Coaxial contacts see pages 05.74 – 05.76	Power contacts see pages 05.72 + 05.73	High voltage contacts see page 05.71	Pneumatic contacts see page 05.77
Working current	5 A	2 A	10 A, 20 A, 30 A or 40 A	10 A DC	–
Test voltage $U_{r.m.s.}$	–	750 V / 50 Hz	–	4 kV / 50 Hz	–
Operating voltage	–	–	–	≤ 3 kV	–
Contact resistance	–	≤ 10 mΩ (inner and outer conductor)	≤ 1 mΩ	≤ 3 mΩ (outer conductor)	–
Impedance	–	50 / 75 Ω	–	–	–
Frequency range	–	0 - 2 GHz	–	–	–
Temperature range	–	-55 °C … +135 °C	-55 °C … +155 °C	-55 °C … +125 °C	-10 °C … +60 °C
Mating cycles					
high performance level	≥ 500	≥ 500	≥ 500	–	–
standard performance level	–	≥ 200	≥ 200	≥ 500	–
Mating force	≤ 3.4 N	≤ 7 N/mated pair	≤ 7 N/mated pair	≤ 5 N	–
Unmating force	≥ 0.2 N	≤ 7 N/mated pair	appr. 5 N	appr. 2.5 N	–
Max. pressure	–	–	–	–	7 bars at 20 °C
Materials					
Contacts	Copper alloy	Copper alloy	Copper alloy	Copper alloy	German silver
Plating for PCB applications*					
Mating side / terminating side	**0.76 µm Au / 0.76 µm Au**		**0.76 µm Au / 5 µm Sn** or 0.2 µm Au / 5 µm Sn	**1.3 µm Au / 1.3 µm Au**	–
Inner conductor mating side / terminating side	–	**1.3 µm Au / 1.3 µm Au** or 0.2 µm Au / 0.2 µm Au	–	–	–
Outer conductor mating side / terminating side	–	**0.76 µm Au / 0.2 µm Au** or 0.2 µm Au / 5 µm Sn	–	–	–
Retaining clip	–	Copper alloy	Copper alloy	PI	–
Insulator	–	PBFE/PBTP/PI	–	PTFE	–
O-ring	–	–	–	–	Vitton

Technical characteristics for shells see page 05.04

* **High performance** or standard performance level

Turned crimp contacts

Identification	Wire gauge (mm^2)	Part number		
		Male contacts	Female contacts	High-end female contacts
		Performance level 1*	Performance level 1*	Performance level 1*
Individual contacts[1)]	AWG 22-18 0.33-0.82	09 67 000 3576	09 67 000 3476	09 67 000 3676
	AWG 24-20 0.25-0.52	09 67 000 8576	09 67 000 8476	09 67 000 8676
	AWG 26-22 0.13-0.33	09 67 000 5576	09 67 000 5476	09 67 000 5676
	AWG 28-24 0.09-0.25	09 67 000 7576	09 67 000 7476	09 67 000 7676

[1)] Minimum order 100 pieces or multiples of 100

Male contacts

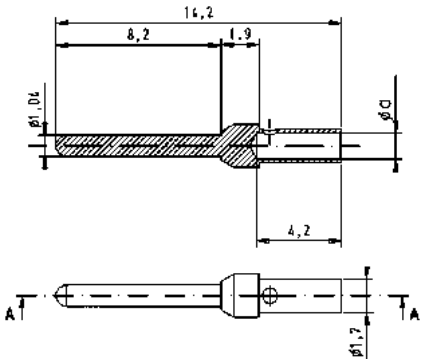

	a	groove
AWG 22-18	1.34	none
AWG 24-20	1.13	1
AWG 26-22	0.88	2
AWG 28-24	0.64	3

Female contacts

Standard

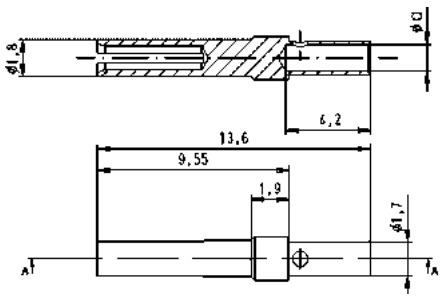

High-end with groove

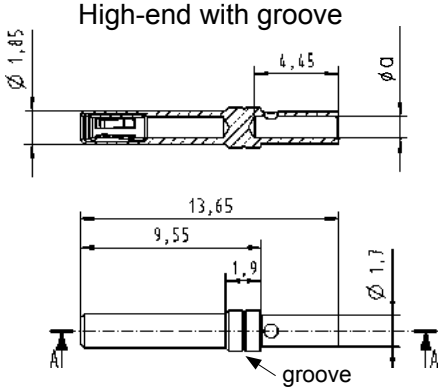

* Performance level 1 as per CECC 75301-802, 500 mating cycles, 10 days 4 mixed gas test – IEC 60512
Use crimp tool with the part no. 09 99 000 0501 and the locator with the part no. 09 99 000 0531. Details see chapter 20

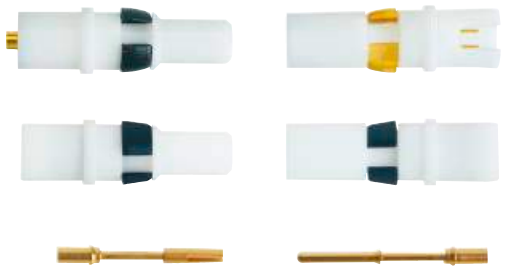

High voltage contacts for cable applications

Identification	Wire gauge (mm²)	Part number	
		Male contacts Plating: 1.3 µm Au[1]	Female contacts Plating: 1.3 µm Au[1]
Straight versions			
with solder termination	AWG 24 - 20 0.25 - 0.56	09 69 281 2550	09 69 181 2550
with crimp termination[2]	AWG 30 - 24 0.05 - 0.25	09 69 282 2550	09 69 182 2550
Right angled versions			
with solder termination	AWG 24 - 20 0.25 - 0.56	09 69 681 2550	09 69 581 2550

Male contacts

Female contacts

Straight versions

with solder termination

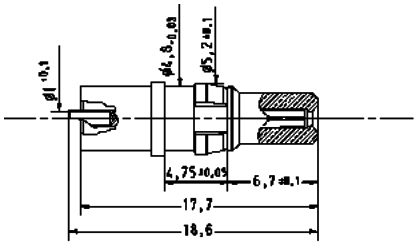

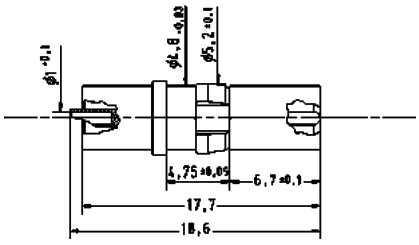

stripping dimensions

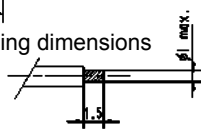

with crimp termination[2]

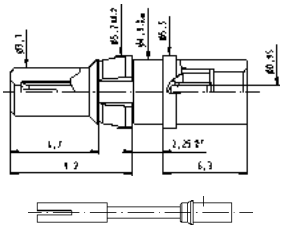

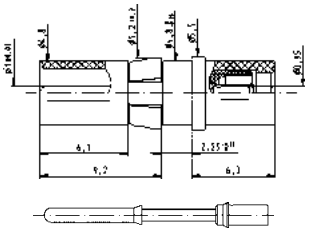

Right angled versions

with solder termination

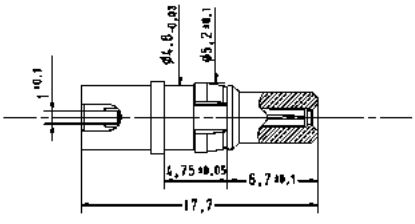

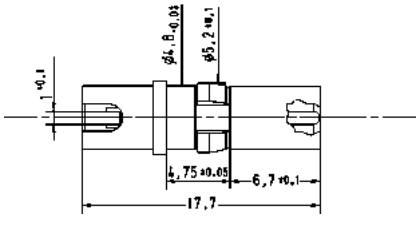

stripping dimensions

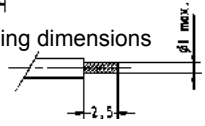

Dimensions in mm

[1] for mating and terminating side
[2] Tooling see chapter 20

Straight power contacts for cable applications

Identification	Rating (A)	Part number	
Performance levels ▶		Performance level 3	S4[1]
Solder version			
Male contacts	10	09 69 281 7420	09 69 281 5420
	20	09 69 281 7421	09 69 281 5421
	30	09 69 281 7422	09 69 281 5422
	40	09 69 281 7423	09 69 281 5423
Short male contacts	20	09 69 281 7821	09 69 281 5821
	40	09 69 281 7823	09 69 281 5823
Female contacts	10	09 69 181 7420	09 69 181 5420
	20	09 69 181 7421	09 69 181 5421
	30	09 69 181 7422	09 69 181 5422
	40	09 69 181 7423	09 69 181 5423
Short female contacts	20	09 69 181 7821	09 69 181 5821
	40	09 69 181 7823	09 69 181 5823
Crimp version[2]			
Male contacts	10	09 69 282 7420	09 69 282 5420
	20	09 69 282 7421	09 69 282 5421
	30	09 69 282 7422	09 69 282 5422
	40	09 69 282 7423	09 69 282 5423
Short male contacts	20	09 69 282 7821	09 69 282 5821
	40	09 69 282 7823	09 69 282 5823
Female contacts	10	09 69 182 7420	09 69 182 5420
	20	09 69 182 7421	09 69 182 5421
	30	09 69 182 7422	09 69 182 5422
	40	09 69 182 7423	09 69 182 5423
Short female contacts	20	09 69 182 7821	09 69 182 5821
	40	09 69 182 7823	09 69 182 5823

[1] S4 = 0.76 µm Au or PdNi equivalent
[2] Tooling see chapter 20

Dimensions see page 05.73

Straight power contacts for cable applications

Identification | Drawing | Dimensions in mm

Male contacts

solder

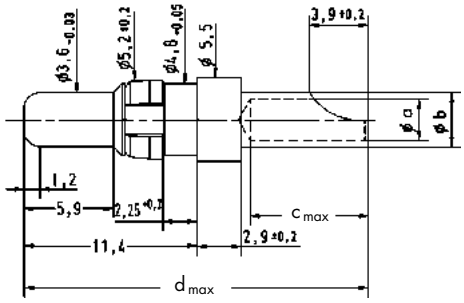

crimp

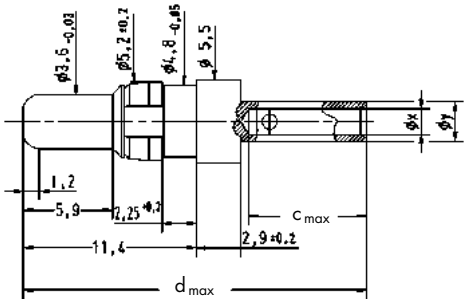

	Rating (A)	ø a -0.1	ø b ±0.05	c_{max}	d_{max}	e	ø x -0.1	ø y ±0.05	AWG
	10	1.8	2.54	7.8	23	7.5	1.7	2.6	16 - 20
	20	2.7	3.63	7.8	23	7.5	2.6	3.6	12 - 14
short version	20	2.7	3.63	4.7	17.4	4.5	2.6	3.6	12 - 14
	30	3.5	4.40	7.8	23	7.5	3.7	4.7	10 - 12
	40	4.8	5.50	7.8	23	7.5	4.6	5.8	8 - 10
short version	40	4.8	5.50	6.4	20	6.1	4.6	5.8	8 - 10

	Rating (A)	min./max. conductor ø	min./max. conductor cross section [mm²]
	10	0.9 to 1.7	0.64 to 2.27
	20	1.8 to 2.6	2.54 to 5.31
short version	20	1.8 to 2.6	2.54 to 5.31
	30	2.2 to 3.7	3.80 to 10.75
	40	2.9 to 4.6	6.61 to 16.62
short version	40	2.9 to 4.6	6.61 to 16.62

Female contacts

solder

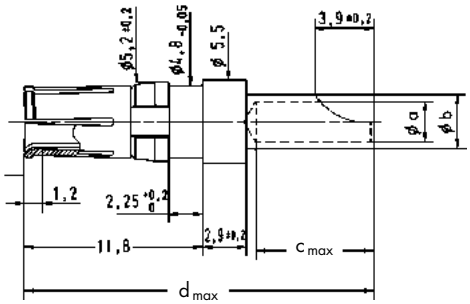

crimp

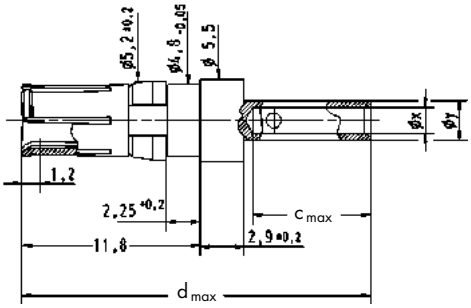

stripping dimensions for male and female contacts

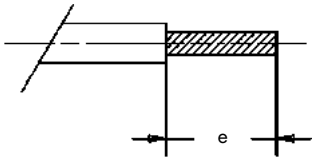

Coaxial contacts for cable applications

Identification	Impedance (Ω)	Part number			
		Straight male contacts		Straight female contacts	
		Performance level 3	S4[1]	Performance level 3	S4[1]
Solder / crimp contact					
for cables RG 174 U, 188 AU, 316 U	50	09 69 281 7140	09 69 281 5140	09 69 181 7140	09 69 181 5140
for cables RG 178 BU, 196 AU, 404 U	50	09 69 281 7141	09 69 281 5141	09 69 181 7141	09 69 181 5141
for cables RG 58 CU, 141 AU	50	09 69 281 7143	09 69 281 5143	09 69 181 7143	09 69 181 5143
for cables RG 179 BU, 187 AU	75	09 69 281 7230	09 69 281 5230	09 69 181 7230	09 69 181 5230
for cables RGD 179	75	09 69 281 7233	09 69 281 5233	09 69 181 7233	09 69 181 5233
Crimp / crimp contact					
for cables RG 174 U, 188 AU, 316 U	50	09 69 282 7140	09 69 282 5140	09 69 182 7140	09 69 182 5140
for cables RG 179 BU, 187 AU	75	09 69 282 7230	09 69 282 5230	09 69 182 7230	09 69 182 5230
for cables RG 59	75	09 69 282 7232	09 69 282 5232	09 69 182 7232	09 69 182 5232
for cables RGD 179	75	09 69 282 7233	09 69 282 5233	09 69 182 7233	09 69 182 5233

Harnessing dimensions (mm)

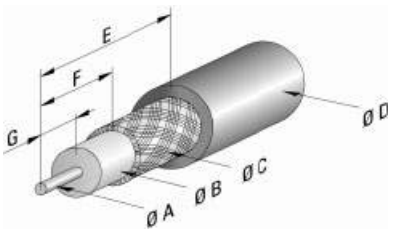

Part number	Ø A	Ø B	Ø C	Ø D	E	F	G
09 69 181 x140 09 69 281 x140	0.85	1.9	2.3	3.2	9.5	5.0	3.0
09 69 181 x141 09 69 281 x141	0.85	1.2	1.4	2.3	9.5	5.0	3.0
09 69 181 x143 09 69 281 x143	1.00	3.0	4.4	5.2	9.5	5.0	3.0
09 69 181 x230 09 69 281 x230	0.50	1.9	2.3	3.2	9.5	5.0	3.0
09 69 182 x140 09 69 282 x140	0.60	1.9	2.4	3.2	9.0	5.0	3.0
09 69 182 x230 09 69 282 x230	0.60	1.9	2.4	3.2	9.0	5.0	3.0
09 69 182 x232 09 69 282 x232	0.95	3.8	5.1	6.2	9.0	4.3	3.7
09 69 181 x233 09 69 281 x233	0.50	1.9	2.6	3.5	9.5	5.0	3.0
09 69 182 x233 09 69 282 x233	0.60	1.9	2.6	3.5	9.3	4.3	3.0

[1] S4 = 0.76 µm Au or PdNi equivalent
Dimensions see pages 05.75 and 05.76
Tooling see chapter 20

Coaxial contacts for cable applications

Identification | Drawing | Dimensions in mm

Male contacts

Part number	ø a	ø b	ø c	ø d
09 69 281 x140	0.85	1.9	2.6	3.2
09 69 281 x141	0.85	1.2	1.7	2.3
09 69 281 x230	0.50	1.9	2.6	3.2

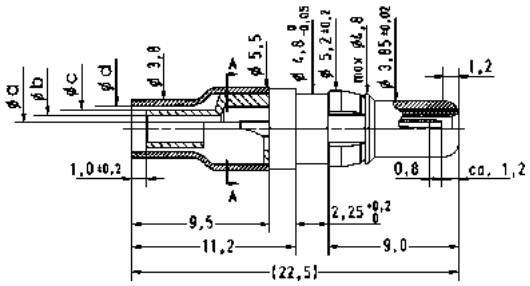

Points of plating thickness measurement

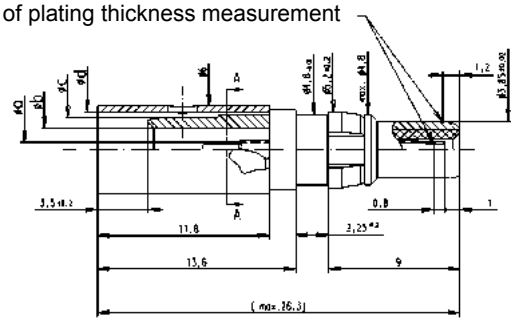

Part number	ø a	ø b	ø c	ø d
09 69 281 x143	1.0	3.0	4.4	5.2

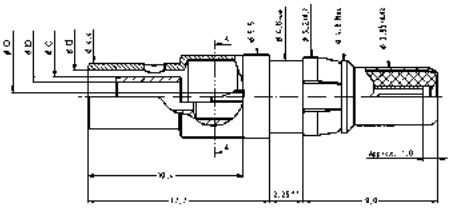

Part number	ø a	ø b	ø c	ø d
09 69 281 x233	0.5	1.9	2.6	3.5

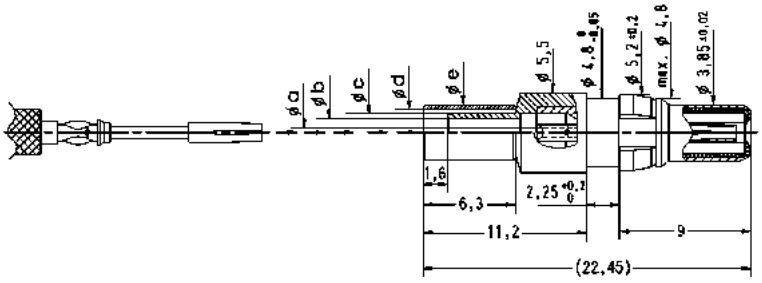

Part number	ø a	ø b	ø c	ø d	ø e
09 69 282 x140	0.6	1.9	2.6	3.2	3.8
09 69 282 x230	0.6	1.9	2.6	3.2	3.8
09 69 282 x233	0.6	1.9	2.6	3.5	4.4

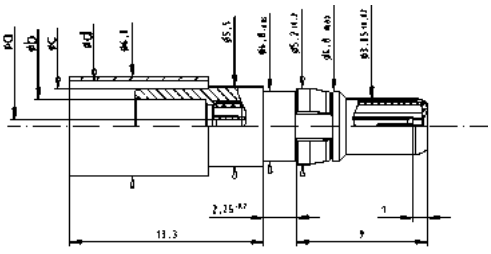

Part number	ø a	ø b	ø c	ø d
09 69 282 x232	0.95	3.8	5.1	6.2

Coaxial contacts for cable applications

Identification | Drawing | Dimensions in mm

Female contacts

Part number	ø a	ø b	ø c	ø d
09 69 181 x140	0.85	1.9	2.6	3.2
09 69 181 x141	0.85	1.2	1.7	2.3
09 69 181 x230	0.50	1.9	2.6	3.2

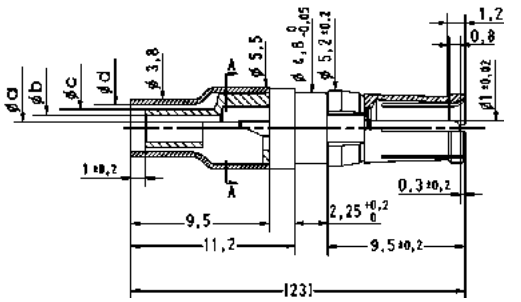

Part number	ø a	ø b	ø c	ø d
09 69 181 x143	1.0	3.0	4.4	5.2

Points of plating thickness measurement

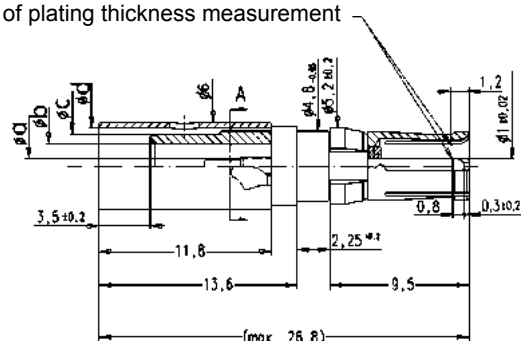

Part number	ø a	ø b	ø c	ø d
09 69 181 x233	0.5	1.9	2.6	3.5

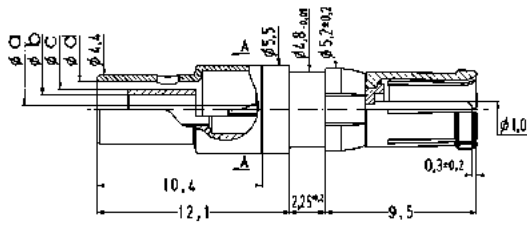

Part number	ø a	ø b	ø c	ø d	ø e
09 69 182 x140	0.6	1.9	2.6	3.2	3.8
09 69 182 x230	0.6	1.9	2.6	3.2	3.8
09 69 182 x233	0.6	1.9	2.6	3.5	4.4

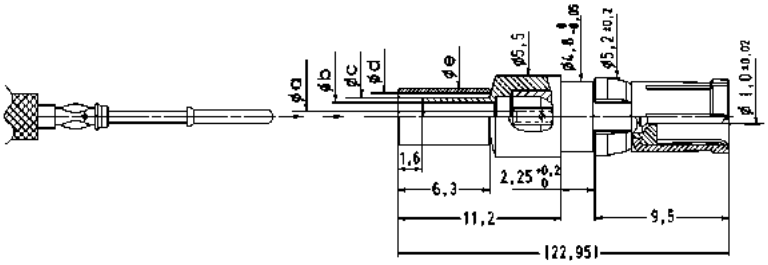

Part number	ø a	ø b	ø c	ø d
09 69 182 x232	0.95	3.8	5.1	6.2

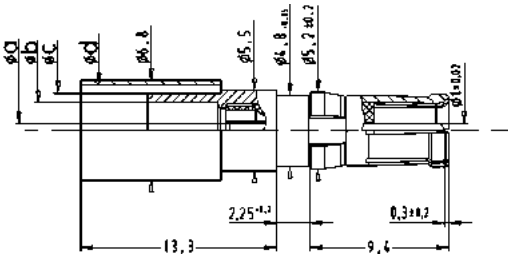

Pneumatic contacts for cable applications

Identification	Inner diameter air tube (mm)	Part number
Male contacts		
	2	09 69 287 0060
	2.6	09 69 287 0061
	3	09 69 287 0062
	4	09 69 287 0063
Female contacts		
	2	09 69 187 0060
	2.6	09 69 187 0061
	3	09 69 187 0062
	4	09 69 187 0063

Male contacts

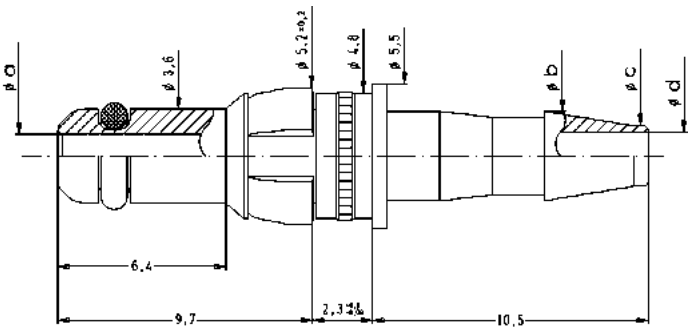

Part number	ø a	ø b	ø c	ø d
09 69 x87 0060	1.45	2.6	1.5	0.95
09 69 x87 0061	1.65	3.1	2.0	1.65
09 69 x87 0062	1.65	3.4	2.3	1.85
09 69 x87 0063	1.65	4.8	3.7	2.95

Female contacts

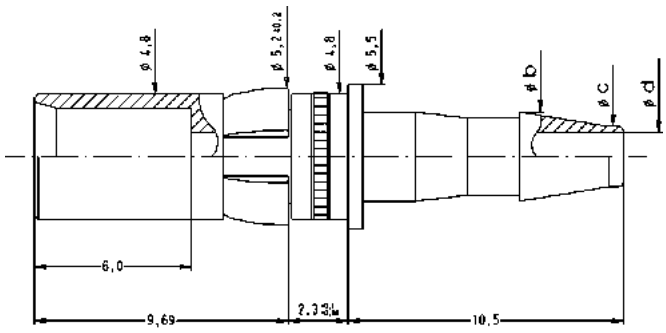

Dimensions in mm

Board drillings for connectors with straight pcb contacts

Pcb hole patterns

In the next pages, the pcb hole pattern is given for the power and the coaxial contact per connector layout. In the case of the power contact, the drilling hole dimension is not mentioned; the table here under provides relevant information according to the current rating of the contact and its version.

Power contact diameter and pcb related drilling diameter

	Straight connectors		Right angled connectors	
Rating	Pin Ø (mm)	Pcb drilling Ø (mm)	Pin Ø (mm)	Pcb drilling Ø (mm)
20 A	2.60	2.9	2.85	3.15
30 A	–	–	3.20	3.50
40 A	3.75	4.0	3.75	4.05

Identification | Drawing | Dimensions in mm

Male connector*

	Power contact	Coaxial contact
2W2 / 2W2C	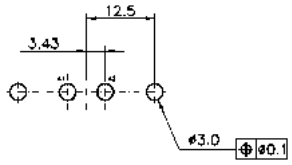	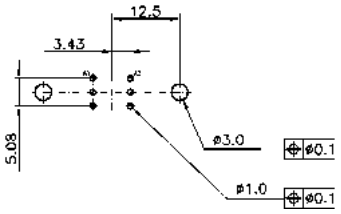
3W3 / 3W3C	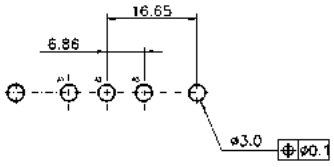	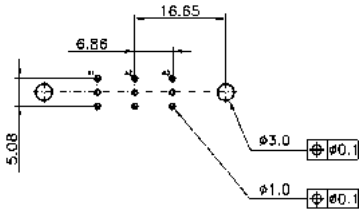
5W1	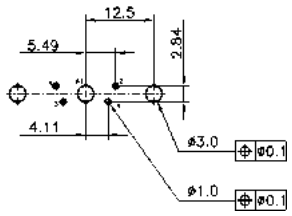	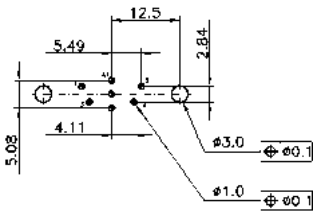
5W5	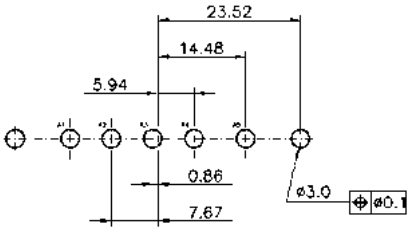	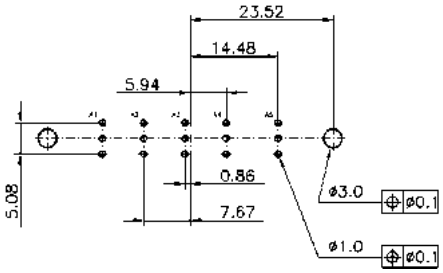
7W2	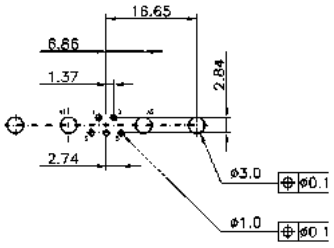	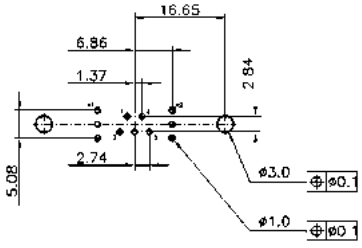

* When using a female connector with straight pcb contacts the board drilling pattern must be mirrored in the Y axis.

Board drillings for connectors with straight pcb contacts

Identification	Drawing	Dimensions in mm
Male connector*	Power contact	Coaxial contact
7W7	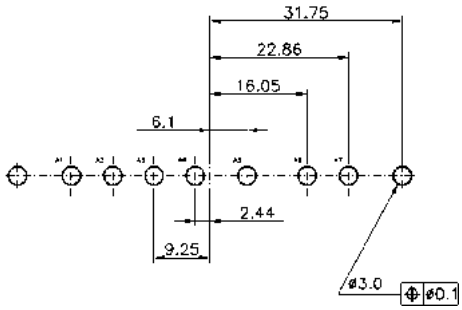	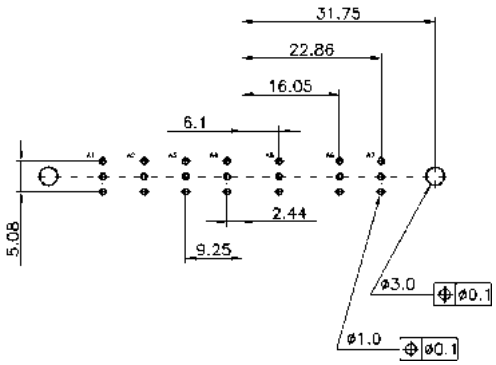
8W8	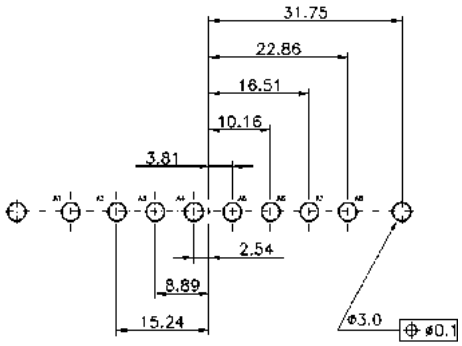	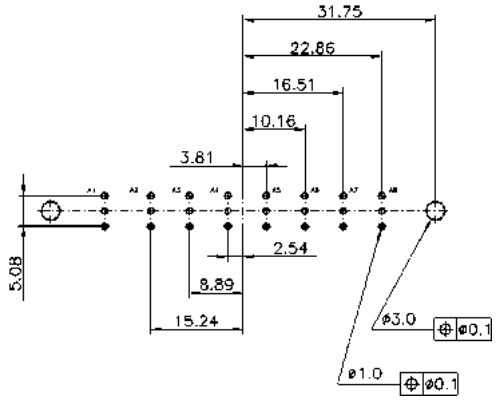
9W4	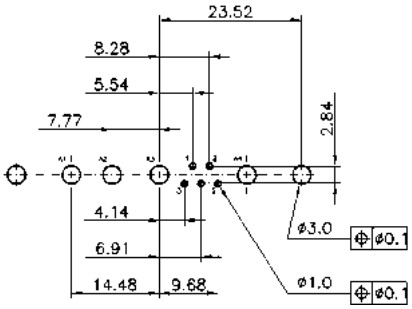	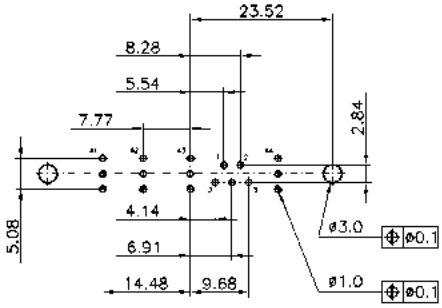
11W1	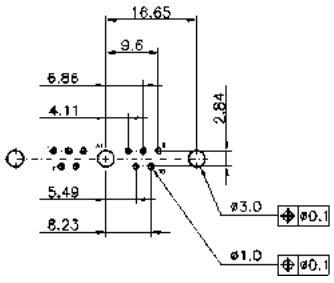	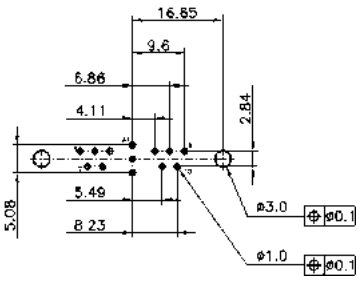

* When using a female connector with straight pcb contacts the board drilling pattern must be mirrored in the Y axis.

Board drillings for connectors with straight pcb contacts

Identification	Drawing	Dimensions in mm
Male connector*	Power contact	Coaxial contact
13W3	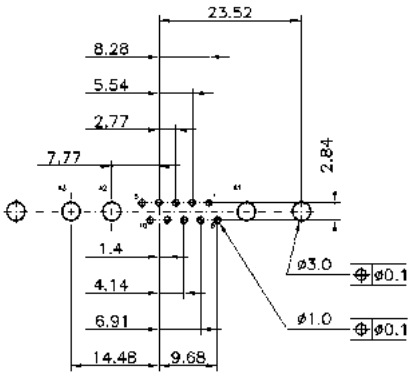	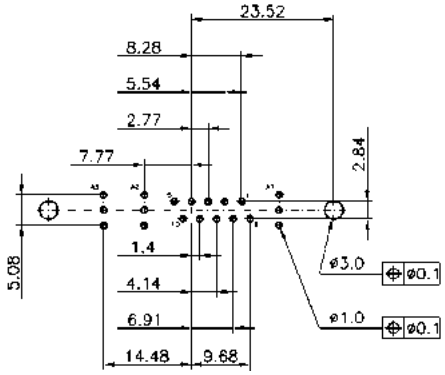
13W6	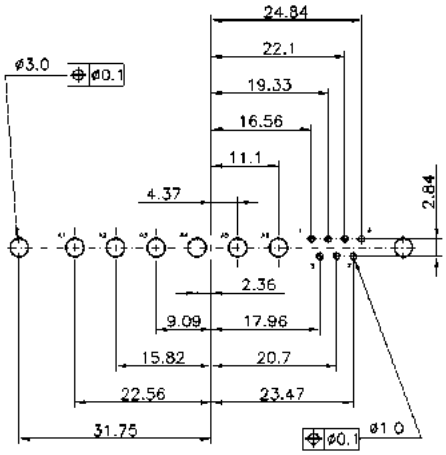	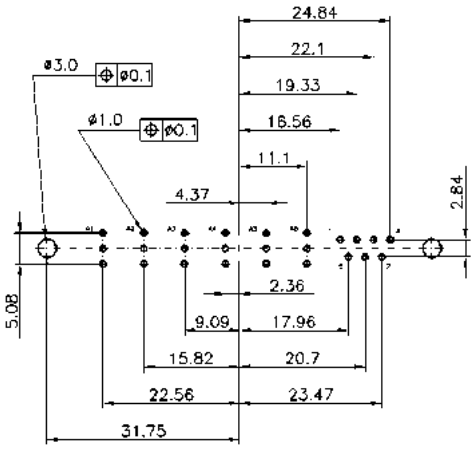
17W2	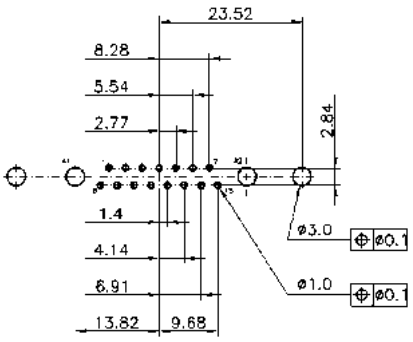	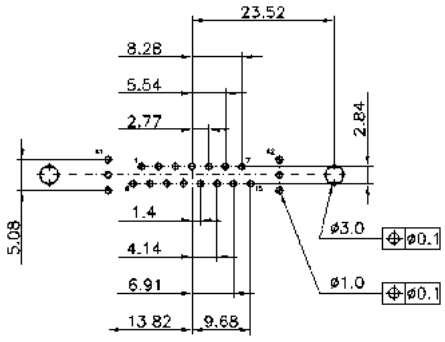
21W1	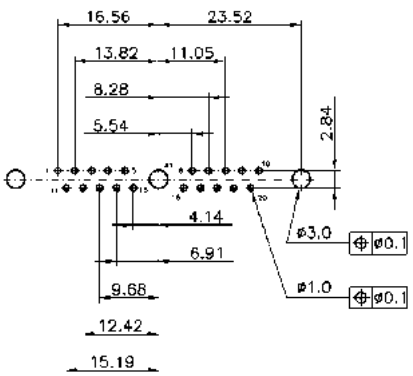	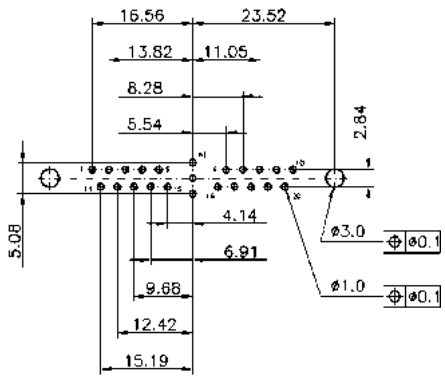

* When using a female connector with straight pcb contacts the board drilling pattern must be mirrored in the Y axis.

Board drillings for connectors with straight pcb contacts

Identification	Drawing	Dimensions in mm

Male connector*

21WA4

Power contact

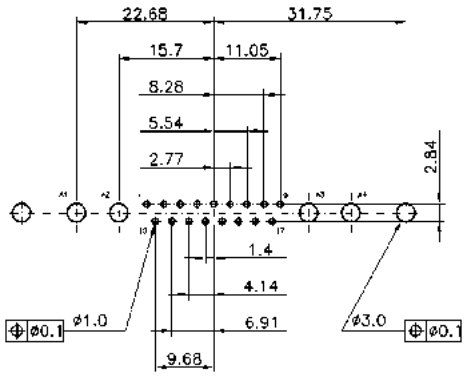

Coaxial contact

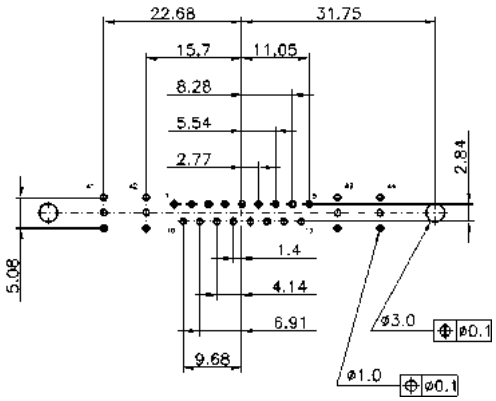

24W7

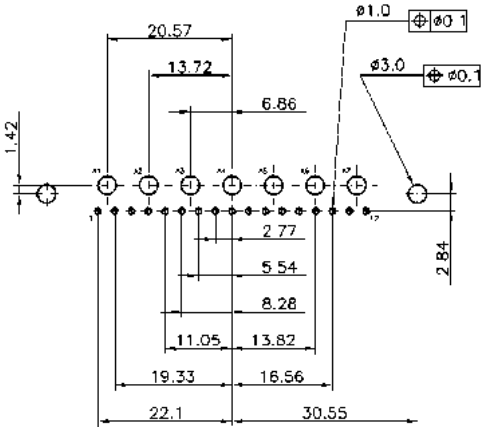

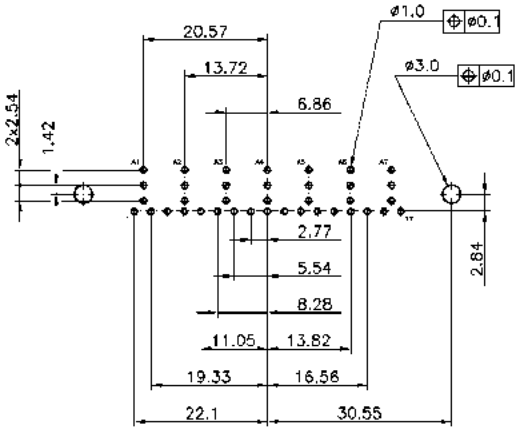

25W3

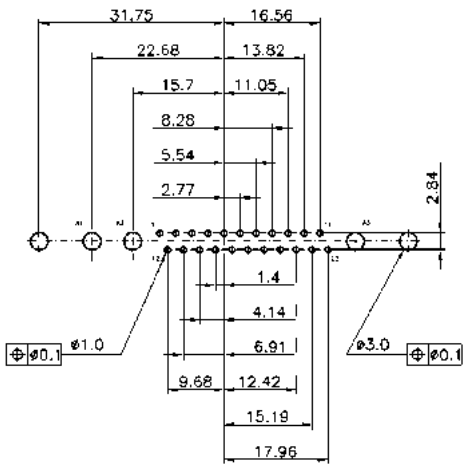

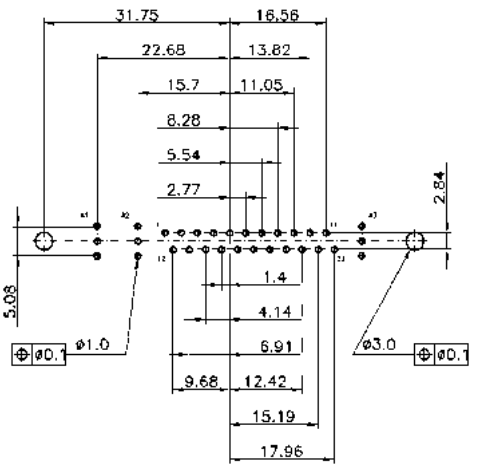

* When using a female connector with straight pcb contacts the board drilling pattern must be mirrored in the Y axis.

Board drillings for connectors with straight pcb contacts

Identification	Drawing	Dimensions in mm

Male connector*

27W2

Power contact

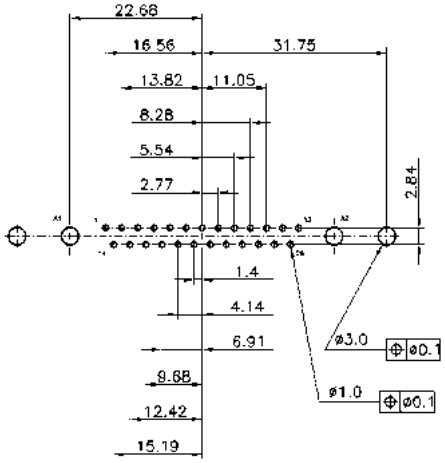

Coaxial contact

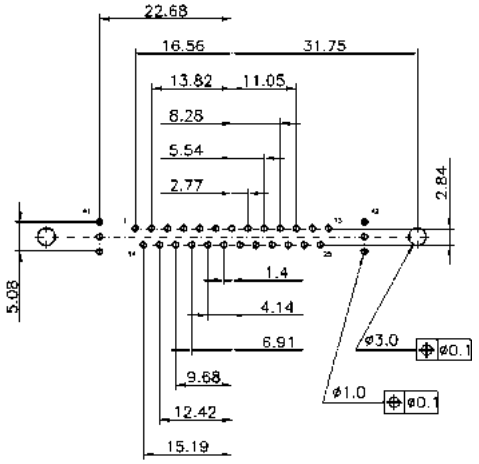

36W4

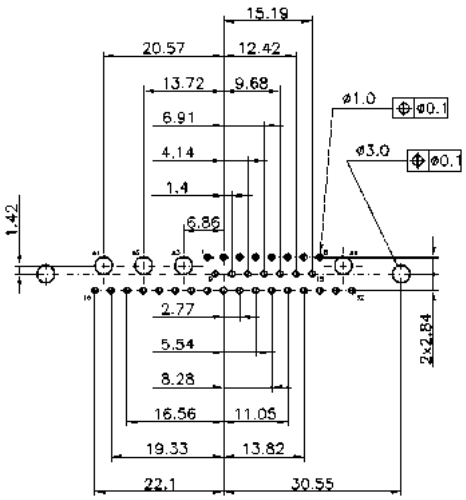

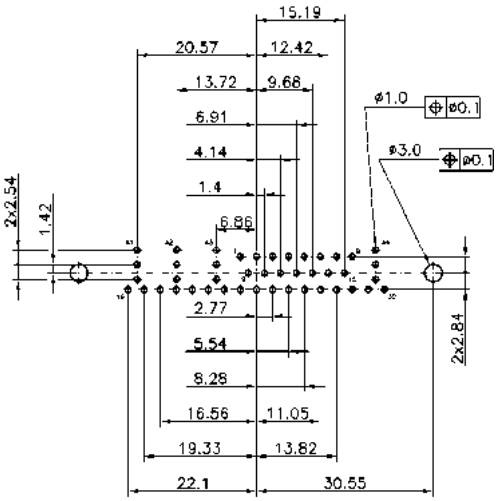

43W2

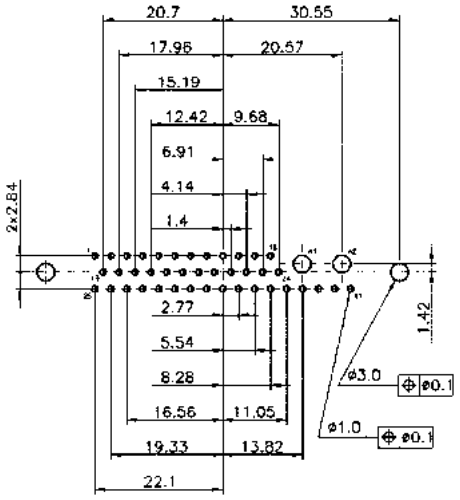

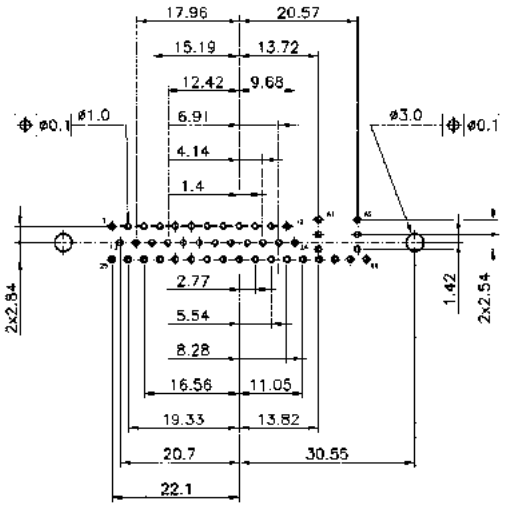

* When using a female connector with straight pcb contacts the board drilling pattern must be mirrored in the Y axis.

Board drillings for connectors with right angled pcb contacts

Identification	Drawing	Dimensions in mm
Male connector*	Power contact	Coaxial contact
2W2 / 2W2C	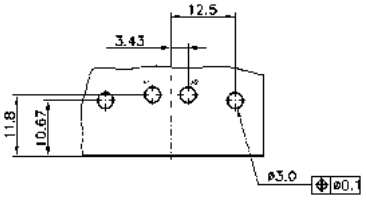	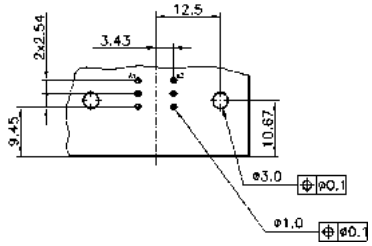
3W3 / 3W3C	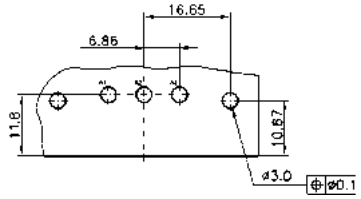	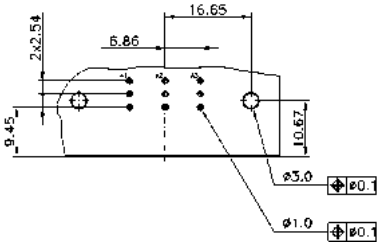
5W1	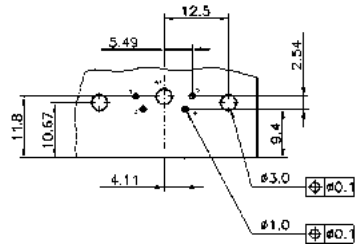	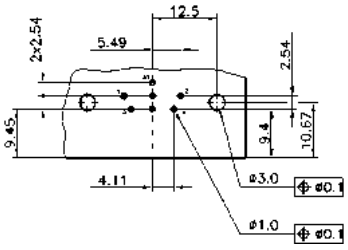
5W5	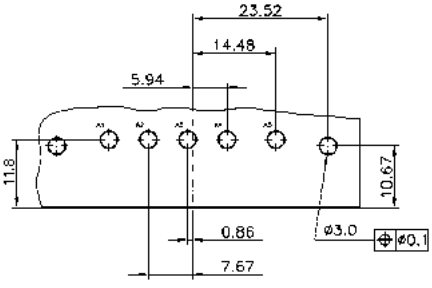	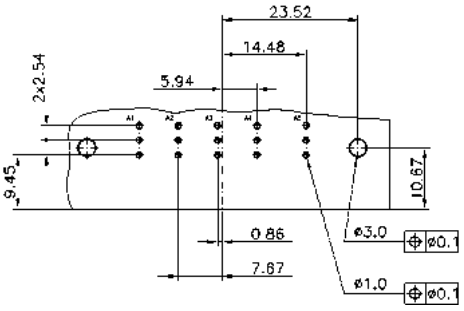
7W2	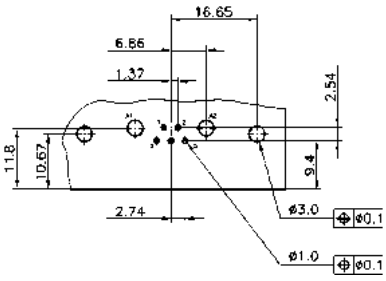	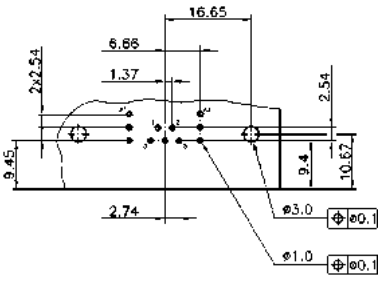

* When using a female connector with right angled pcb contacts the board drilling pattern must be mirrored in the Y axis.

Board drillings for connectors with right angled pcb contacts

Identification	Drawing	Dimensions in mm
Male connector*	Power contact	Coaxial contact
7W7	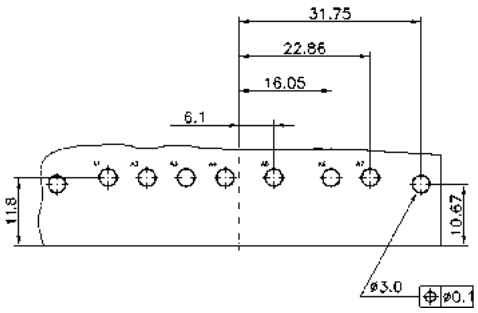	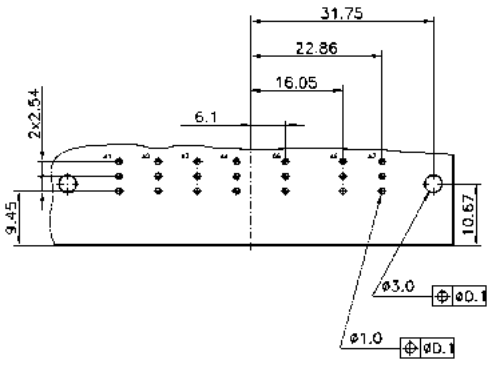
8W8	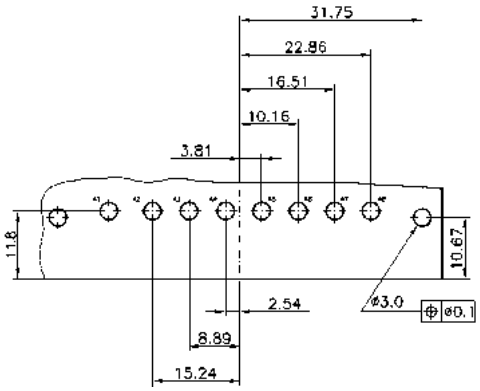	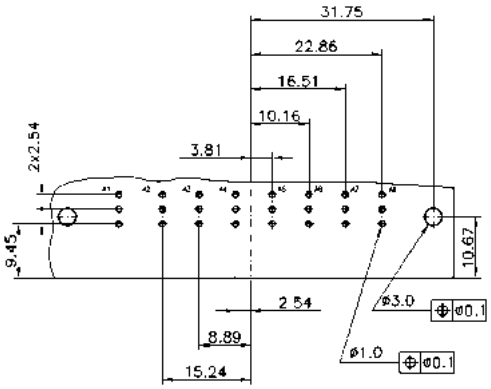
9W4	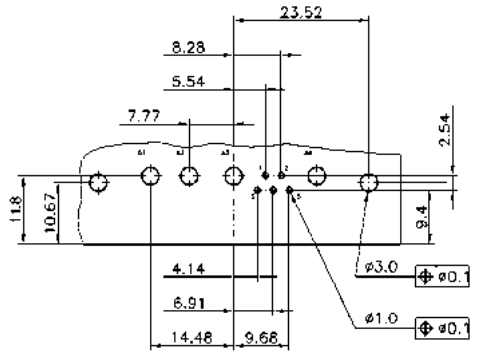	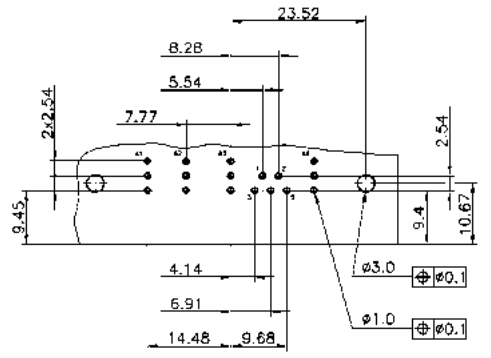
11W1	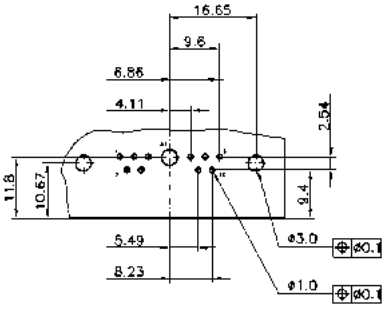	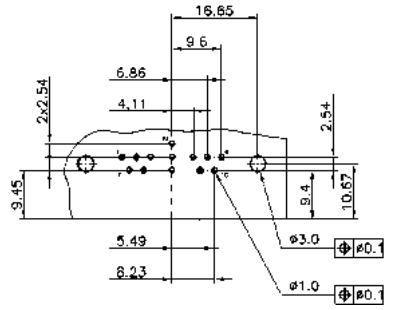

* When using a female connector with right angled pcb contacts the board drilling pattern must be mirrored in the Y axis.

Board drillings for connectors with right angled pcb contacts

Identification	Drawing	Dimensions in mm
Male connector*	Power contact	Coaxial contact
13W3	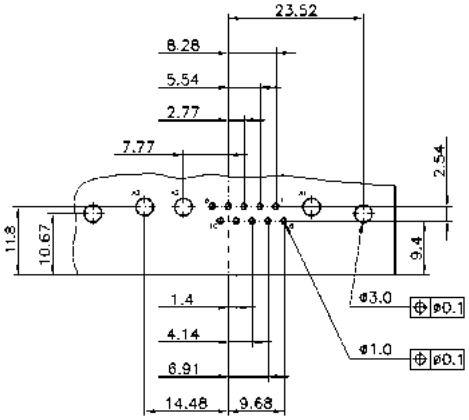	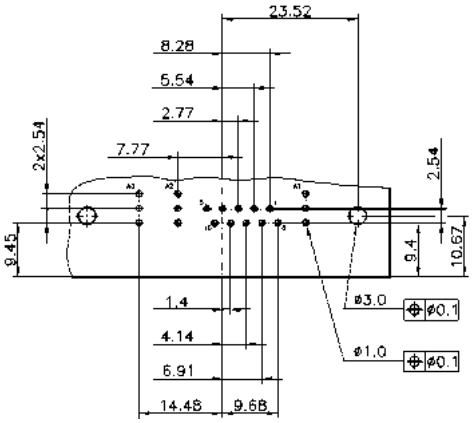
13W6	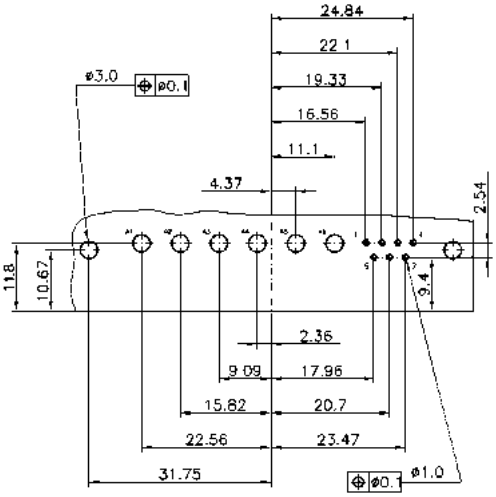	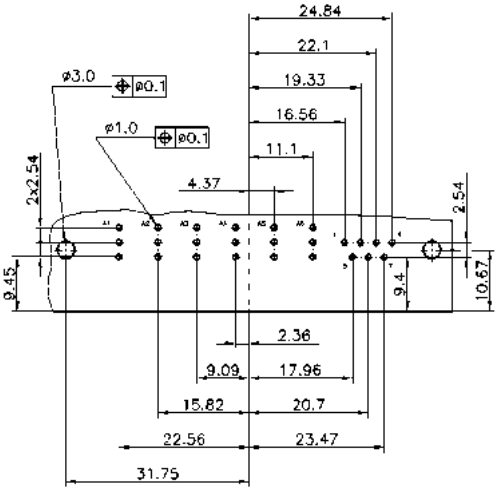
17W2	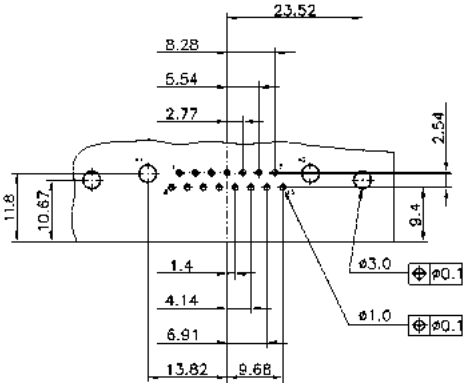	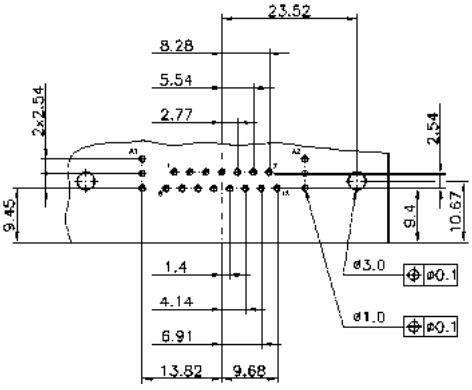
21W1	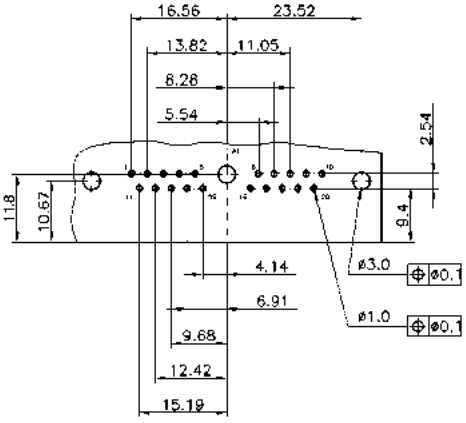	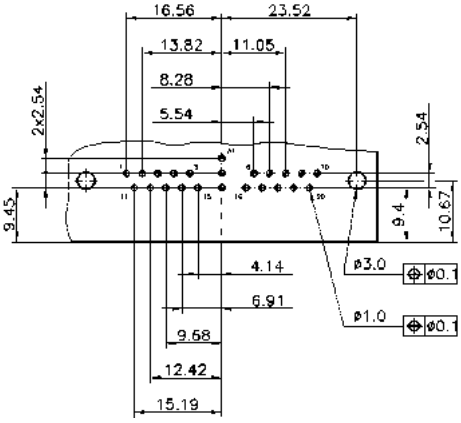

* When using a female connector with right angled pcb contacts the board drilling pattern must be mirrored in the Y axis.

Board drillings for connectors with right angled pcb contacts

Identification	Drawing	Dimensions in mm

Male connector*

21WA4

Power contact

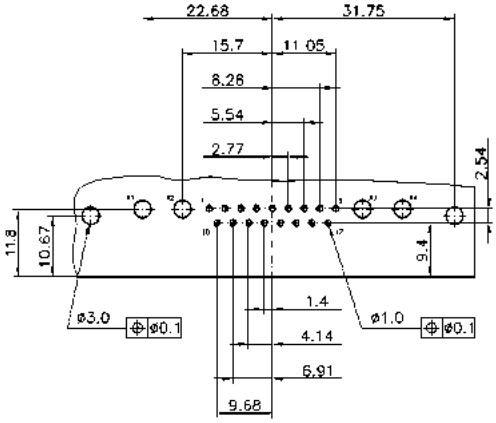

Coaxial contact

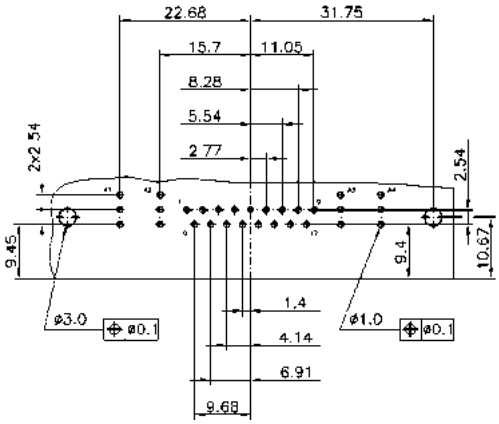

24W7

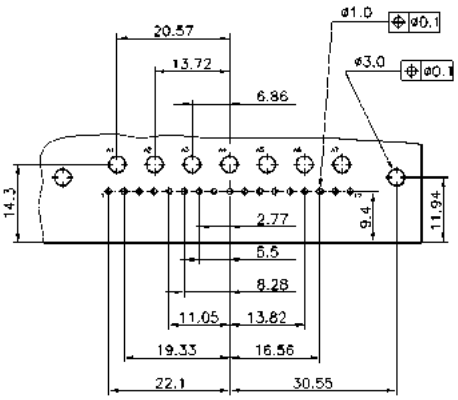

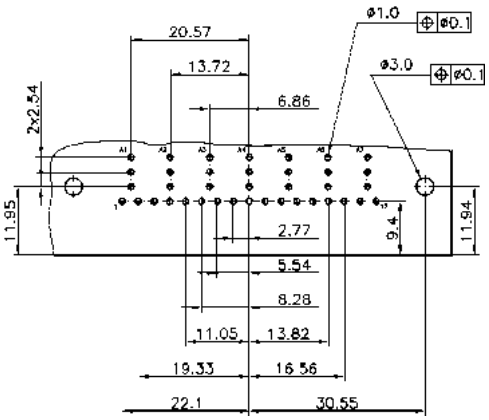

25W3

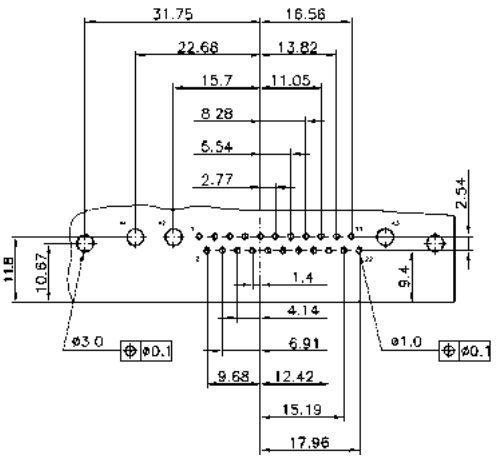

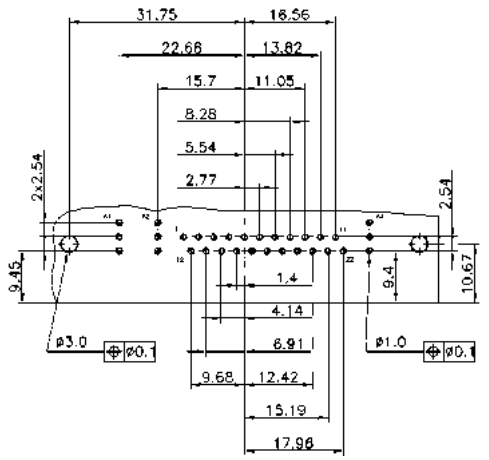

* When using a female connector with right angled pcb contacts the board drilling pattern must be mirrored in the Y axis.

Board drillings for connectors with right angled pcb contacts

Identification	Drawing	Dimensions in mm

Male connector*

Power contact

27W2

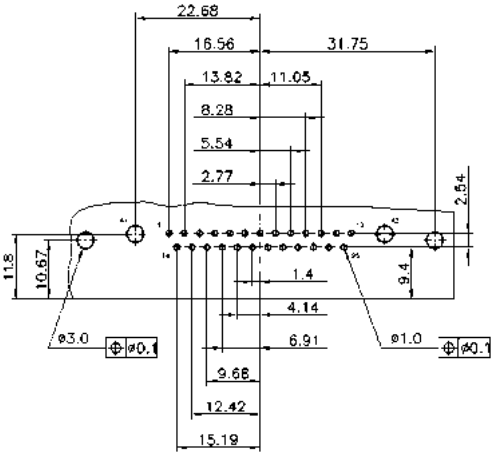

36W4

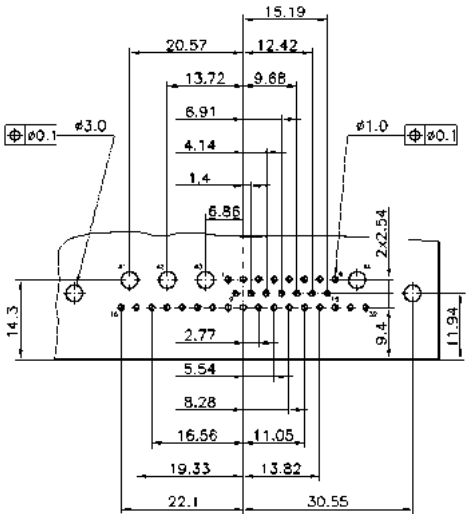

43W2

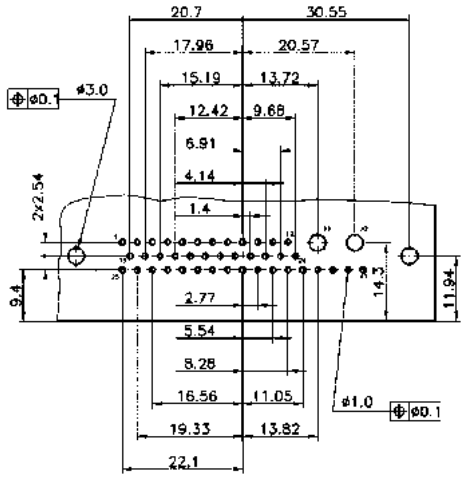

Coaxial contact

27W2

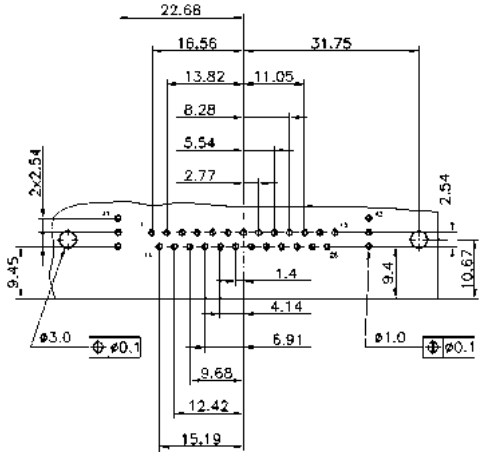

36W4

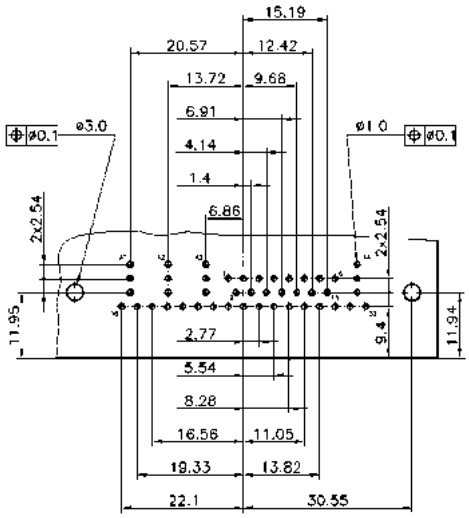

43W2

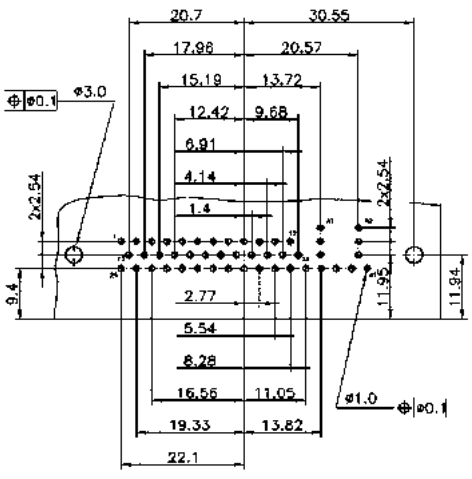

* When using a female connector with right angled pcb contacts the board drilling pattern must be mirrored in the Y axis.

HARTING customer request form for pcb connectors

1 Connector gender and type

☐ Plug (male contacts)
☐ Receptacle (female contacts)

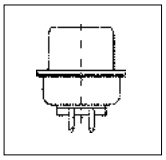

☐ Straight

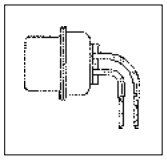

☐ Right angled

2 Contact arrangement

Standard

☐ 2W2	☐ 7W7	☐ 13W6	☐ 25W3
☐ 3W3	☐ 8W8	☐ 17W2	☐ 27W2
☐ 5W1	☐ 9W4	☐ 21W1	☐ 36W4
☐ 5W5	☐ 11W1	☐ 21WA4	☐ 43W2
☐ 7W2	☐ 13W3	☐ 24W7	

Special configurations (mixed contact genders)

☐ 2W2C ☐ 3W3C

2.1 Any signal contacts?

☐ Yes (fill in questions below) ☐ No (go directly to item 2.2)

☐ Right angled 2.54 mm pitch
☐ Other pitch: _____

2.2 Any power contacts?

☐ Yes (fill in questions below) ☐ No (go directly to item 2.3)

Current rating

☐ 10 A ☐ 30 A
☐ 20 A ☐ 40 A

Termination type

☐ Solder pin for pcb
☐ Press-in for pcb (30 A, straight version only)

Performance level
[mating side / termination side]

☐ S4 [0.76 µm Au / 0.2 µm Au]
☐ PL 3 [0.2 µm Au / 5.0 µm Sn]

2.3 Any coaxial contacts?

☐ Yes (fill in questions below) ☐ No (go directly to item 2.4)

Impedance

☐ 50 Ω
☐ 75 Ω

Performance level
[mating side inner / outer conductor]

☐ S4 [1.3 µm Au / 0.76 µm Au]
☐ PL 3 [0.2 µm Au / 0.2 µm Au]

2.4 Any high voltage contacts?

☐ Yes ☐ No (go directly to item 2.5)

2.5 Any pneumatic contacts?

☐ Yes (fill in questions below) ☐ No (go directly to item 3)

Tube inner diameter / suitable compressed air tube

☐ 2 mm / PU-2 ☐ 2.6 mm / PU-N4* 2.5
☐ 3 mm / PU-3 ☐ 4 mm / PU-4

HARTING customer request form for pcb connectors

3 Pcb mounting accessories (select appropriate fixing accessories)

3.1 Right angled version

- ☐ Through hole
- ☐ Nut 4-40 UNC
- ☐ Nut M3
- ☐ Metal bracket
- ☐ Snap clip

Screw lock

- ☐ fixed ☐ removable
- ☐ 4-40 UNC ☐ M3

3.2 Straight version

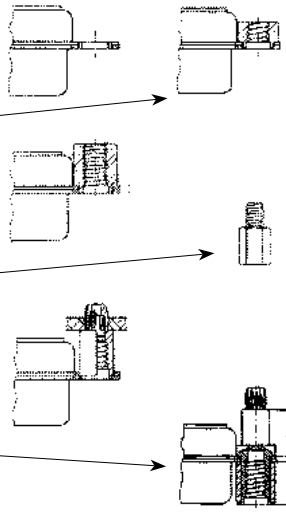

- ☐ Through hole
- ☐ Nut 4-40 UNC
- ☐ Nut M3
- ☐ Spacer 4-40 UNC
- ☐ Spacer M3
- ☐ Screw lock 4-40 UNC
- ☐ Spacer 4-40 UNC + clip
- ☐ Spacer M3 + clip

Spacer + clip and screw lock

- ☐ M3 ☐ 4-40 UNC

4 Additional information

Pcb thickness: ***(if possible provide pcb layout with plating specifications)***

Operating temperature: ☐ standard ☐ SMC compatible

Is hot plugging required ☐ No ☐ Yes Short description: _____

Is blind mating feature required? ☐ No ☐ Yes (provide precise requirements)

Name: _____ Drawing: ☐ no ☐ yes

Company: _____ Samples: ☐ no ☐ yes, quantity

Address: _____ Volume (pcs./year): _____

Phone: _____ Special requirements: _____

Fax: _____

E-Mail: _____

Interference – Yesterdays problem!

In a fast developing technological environment the management of electromagnetic interference is becoming more challenging.

Therefore HARTING developed a range of filter solutions to help designers of electronic equipments to achieve the demanding goal of electromagnetic compatibility.

HARTING offers a wide range of solutions by the integration of a filter inside one of the most standard I/O ports on the market; the D-Sub.

From standard simple ferrite-filter solution to complex customized high performance filters, you will be able to find in the HARTING filter D-Sub range the adequate solution to protect your application from any introduction or radiation of noise through D-Sub port apertures.

Advantages

Wide range:

- 9, 15, 25 and 37 contact versions
- Various terminations such as solder buckets, straight and right angled solder pins
- A large range of accessories
- High performance (C-filter) as well as simple, quick and cost effective solutions (ferrite-filter)

Compatible with standard wave and lead-free reflow soldering (C-filter)

Same layout and shell dimensions as standard D-Sub connectors, no modification of PCB design necessary

Elimination of ringing, crosstalk phenomenon thanks to specific multilayer PCB used in C-filter design.

Flexible filter structure allowing a wide range of customization:

- Filter value (even pin by pin approach)
- Pi-filter
- Dielectric withstanding and working voltage
- Specific ESD / lightening protection

HARTINGs broad Filter range

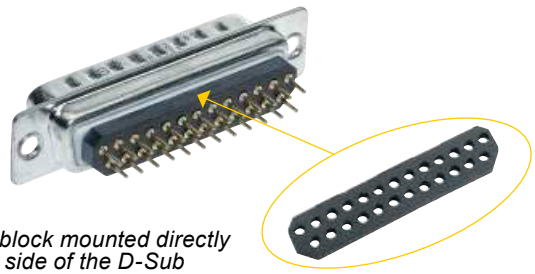

Ferrite block mounted directly on rear side of the D-Sub

Ferrite-filter
Ferrite-filter D-Subs providing a low level of filtering thanks to simple blocks of inductive ferrite attached to the back end of the connectors.
Providing a few dB attenuation only at high frequencies HARTING ferrite-filter D-Subs represent a cost effective solution in applications where the emission level is close to the limit.

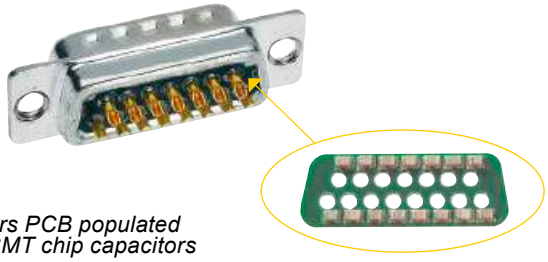

4 layers PCB populated with SMT chip capacitors

C-filter
To address higher EMI disturbances HARTING propose a comprehensive range of C-filter D-Sub connectors. HARTING C-filter D-Sub integrates a patented 4 layer printed circuit board equipped with chip capacitors. This patented solution provides complete protection of the I/O port due to the filtering performance of the capacitors and the screening effect of the PCB. Further more the 4 layers PCB also limits the ability of interference to enter the equipment through the D-Sub aperture. Available in 4 standard filter values 47, 470, 1000 and 3900 pF HARTING C-filter D-Subs represent for all designers a smart filtering solution allowing replacement of a “defective” port by a filtered one without any change of the PCB design.

Filter adapter
To support engineers in the diagnosis of EMI disturbances HARTING has developed, in addition to its filter series a range of male/female filter D-Sub adapters.
These back-to-back adapters can be used as testing tools and replaced later on in production directly by a filtered D-Sub connector.

Number of contacts	9, 15, 25, 37
Working current	7.5 A max.
Working voltage	250 V AC max.
Dielectric withstanding voltage	500 V AC for 1 minute
Contact resistance	≤ 15 mΩ
Insulation resistance	≥ 1000 MΩ
Temperature range	-55 °C … +105 °C
Terminations	a) Solder buckets AWG 20 b) Solder pins for P.C.B. holes Ø 1 ± 0.05 mm c) Solder pins, angled 90° for P.C.B. holes Ø 1 ± 0.05 mm
Materials	
Insulation	PBT, flame retardant acc. to UL 94-V0
Contacts	Copper alloy
Contact surface	
Performance level	Performance level 3, as per IEC 60807-2, IEC 60512-25-2
Metal shell	Steel (tin-plated)

Contact arrangement

View from termination side

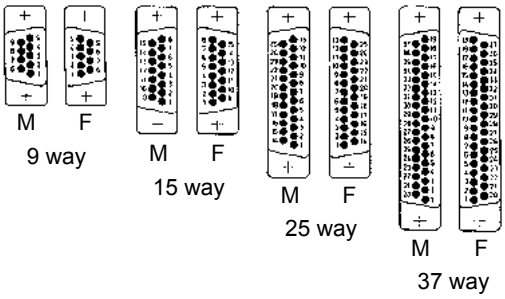

M = Male connector
F = Female connector

Mating conditions as per CECC 75301

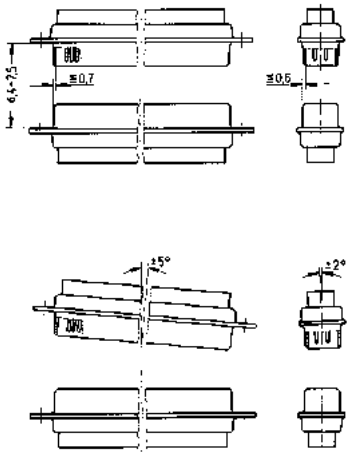

Minimum insertion loss

Frequency [MHz]	Attenuation [dB]
1	0.5
10	1.0
50	2.5
100	3.0
500	3.5
1000	4.0

Number of contacts

9–25

Solder pins, straight, through hole

Identification	No. of contacts	Part number	
		male connectors	female connectors
Connectors with ferrite-filter	9	09 64 122 7800	09 64 112 7800
	15	09 64 222 7800	09 64 212 7800
	25	09 64 322 7800	09 64 312 7800

Male connector

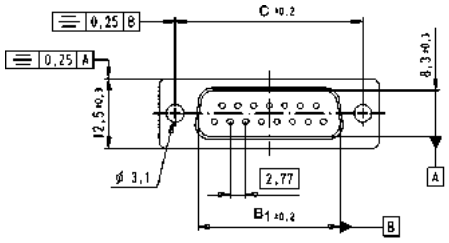

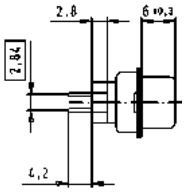

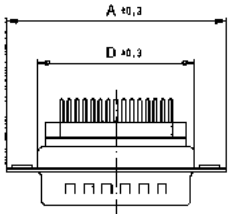

No. of contacts	A	B_1	B_2	C	D
9	30.8	16.92	16.3	25.0	19.2
15	39.2	25.25	24.6	33.3	27.7
25	53.1	38.96	38.3	47.1	41.1

Female connector

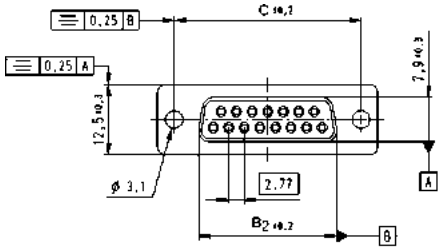

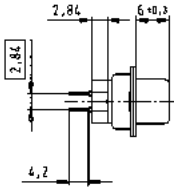

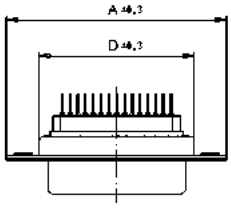

Board drillings

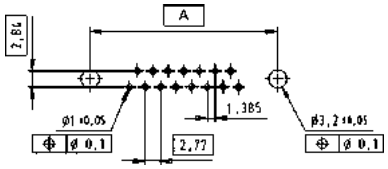

Dimensions in mm

Number of contacts

9–37

Solder pins, right angled, board lock and clinch nut

Identification	No. of contacts	Part number	
		male connectors	female connectors
Connectors with ferrite-filter	9	09 64 123 7802	09 64 113 7802
	15	09 64 223 7802	09 64 213 7802
	25	09 64 323 7802	09 64 313 7802
	37	09 64 423 7802	09 64 413 7802

Male connector

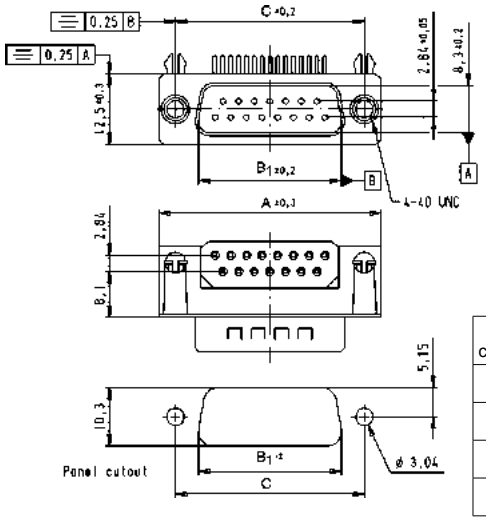

No. of contacts	A	B_1	B_2	C	E	F
9	30.8	16.92	16.3	25.0	3	4
15	39.2	25.25	24.6	33.3	6	7
25	53.1	38.96	38.3	47.1	11	12
37	69.4	55.42	54.8	63.5	17	18

Female connector

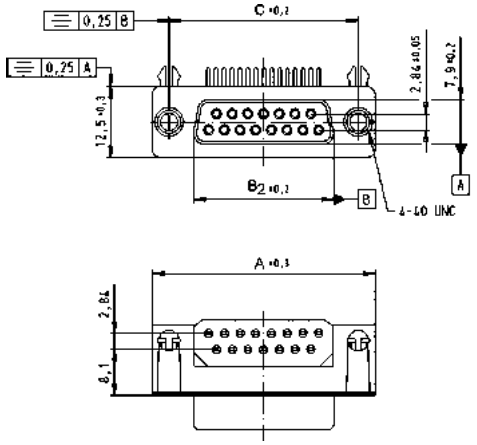

Board drillings

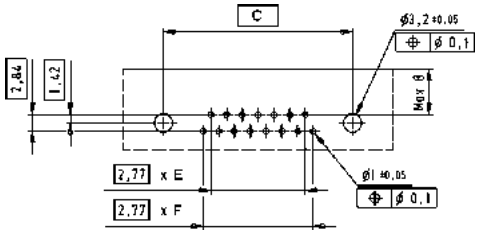

Dimensions in mm

Number of contacts

9–37

Solder buckets, through hole

Identification	No. of contacts	Part number	
		male connectors	female connectors
Connectors with ferrite-filter	9	09 64 121 7800	09 64 111 7800
	15	09 64 221 7800	09 64 211 7800
	25	09 64 321 7800	09 64 311 7800
	37	09 64 421 7800	09 64 411 7800

Male connector

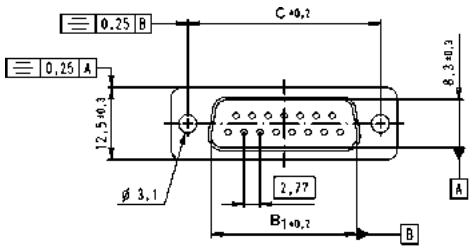

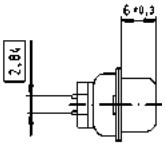

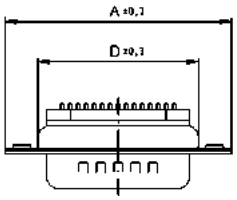

No. of contacts	A	B_1	B_2	C	D
9	30.8	16.92	16.3	25.0	19.2
15	39.2	25.25	24.6	33.3	27.7
25	53.1	38.96	38.3	47.1	41.1
37	69.4	55.42	54.8	63.5	57.3

Female connector

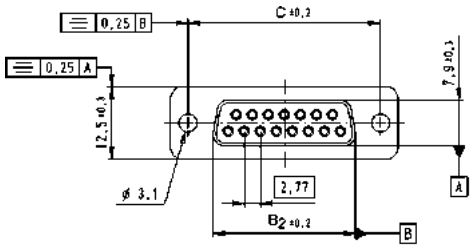

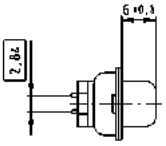

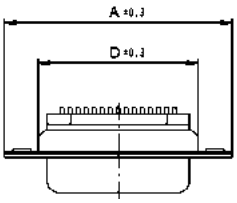

Dimensions in mm

Number of contacts	9, 15, 25, 37
Working current	7.5 A max. (connectors) 6.5 A max. (filter adapters)
Working voltage	100 V max. for standard capacitance values – higher working voltages are available as specific.
Dielectric withstanding voltage	250 V DC max. – higher dielectric withstanding voltages are available as specific (see page 05.112)
Contact resistance	≤ 10 mΩ
Insulation resistance	≥ 1000 MΩ
Temperature range	-55 °C … +125 °C (connectors) Heat deflection temperature limit according to DIN 53461: … +255 °C -20 °C … +125 °C (filter adapters)
Terminations	a) Solder buckets max. 0.8 mm² b) Solder pins Ø 0.6 mm for P.C.B. holes Ø 0.8/1 mm c) Solder pins, angled 90° Ø 0.6 mm for P.C.B. holes Ø 0.8/1 mm
Materials	
Insulation	PCT, glass-fibre filled, flame retardant acc. to UL 94-V0 Colour: natural
Contacts	Copper alloy Male and female contacts are turned
Contact surface	
Contact zone	Selectively plated according to performance level
Performance level	Performance level 2, as per CECC 75 301-802, 250 mating cycles, 4 days 4 mixed gas test – IEC 60512
Metal shell	Steel

Contact arrangement

View from termination side

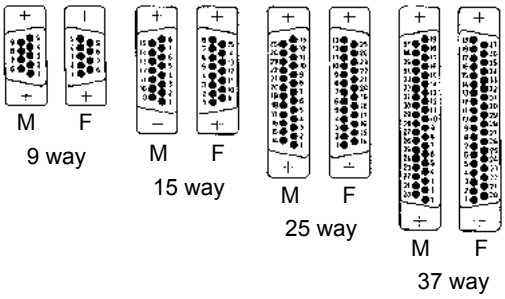

M = Male connector
F = Female connector

Mating conditions as per CECC 75301

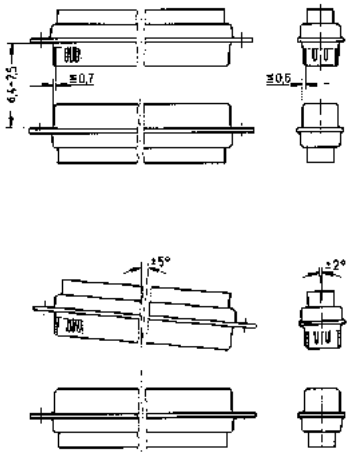

Pi filters are only available for male connectors

Attenuation characteristics for standard capacitance values

Min. insertion loss

Capacitance [pF][1)] / Frequency [MHz]	Attenuation (in dB) vs. frequency [MHz]						
	1	5	10	50	100	500	1000
47						30	35
470			1	11	16	35	32
1000		1	3	12	24	38	30
3900	1	6	11	25	35	38	32

[1)] Capacitance tolerance = ± 20 % (For other capacitor values see pages 05.112 ff).

Measured in 50 Ω system according to MIL-STD-220, no load.

Working voltage: 100 V max. for standard capacitance values – higher working voltages are available as specific.

Dielectric withstanding voltage: 250 V DC max. – higher dielectric withstanding voltages are available as specific (see page 05.112)

Typical insertion loss for different filters (measured)

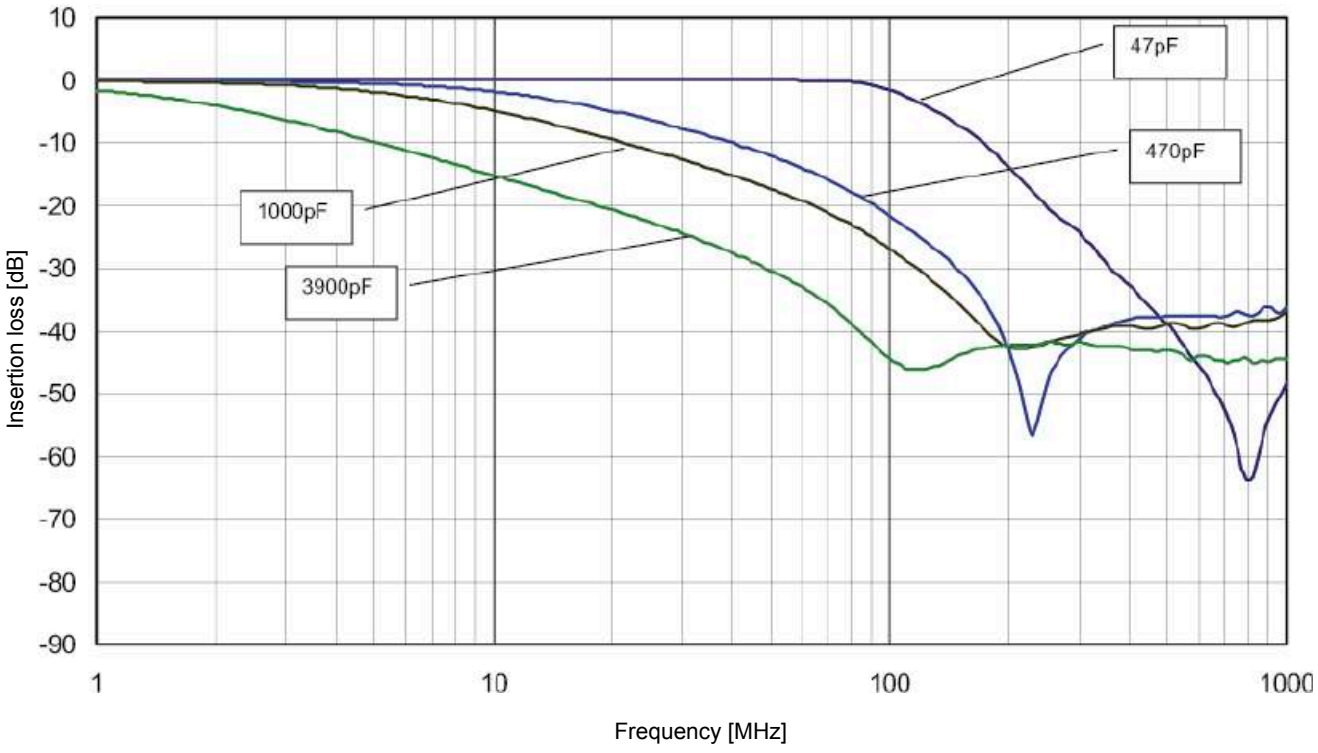

Number of contacts

9–37

Filter adapters

Identification	No. of contacts	Part number
Male / female filter adapters with C filter		
	9	09 64 100 72 . .
	15	09 64 200 72 . .
	25	09 64 300 72 . .
	37	09 64 400 72 . .

Please insert digit for capacitance

- 47 pF ▶ 10
- 470 pF ▶ 20
- 1000 pF ▶ 30
- 3900 pF ▶ 40

Dimensions

	A	B
9	32.8	24.99
15	41.1	33.32
25	55.0	47.04
37	71.3	63.50

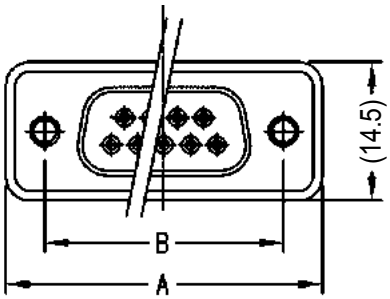

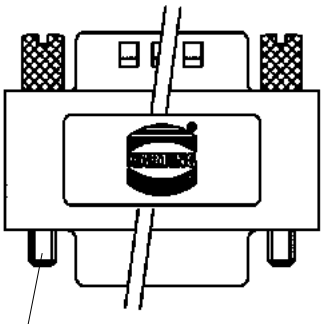

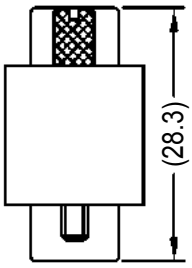

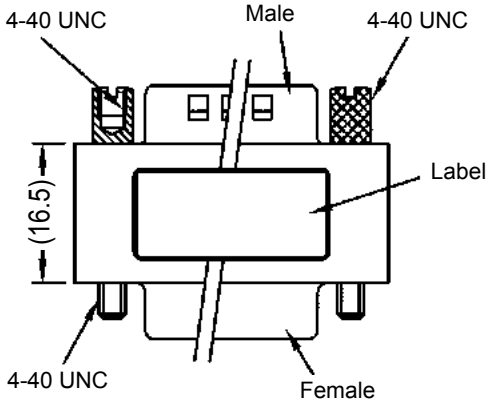

Screws are not pre-mounted to allow mounting from any ends

Dimensions in mm

Number of contacts

9–37

Turned solder pins, straight, through hole

Identification	No. of contacts	Part number	
		male connectors	female connectors
Connectors with **47 pF** C filter	9	09 64 122 7210	09 64 112 7210
	15	09 64 222 7210	09 64 212 7210
	25	09 64 322 7210	09 64 312 7210
	37	09 64 422 7210	09 64 412 7210
Connectors with **470 pF** C filter	9	09 64 122 7220	09 64 112 7220
	15	09 64 222 7220	09 64 212 7220
	25	09 64 322 7220	09 64 312 7220
	37	09 64 422 7220	09 64 412 7220
Connectors with **1000 pF** C filter	9	09 64 122 7230	09 64 112 7230
	15	09 64 222 7230	09 64 212 7230
	25	09 64 322 7230	09 64 312 7230
	37	09 64 422 7230	09 64 412 7230
Connectors with **3900 pF** C filter	9	09 64 122 7240	09 64 112 7240
	15	09 64 222 7240	09 64 212 7240
	25	09 64 322 7240	09 64 312 7240
	37	09 64 422 7240	09 64 412 7240

Number of contacts

9–37

Turned solder pins, straight, through hole

Identification	Drawing	Dimensions in mm

Male connector

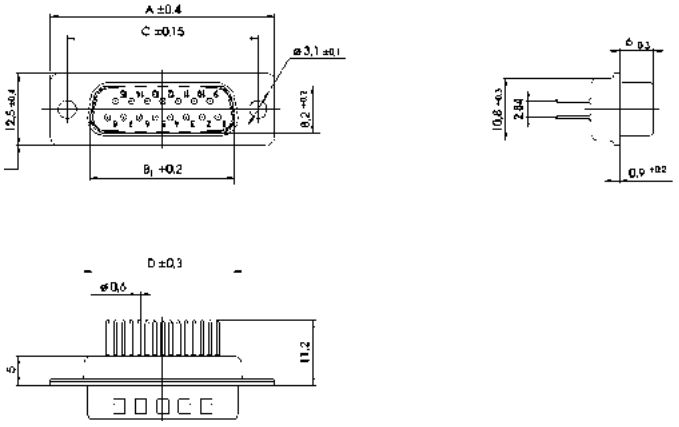

No. of contacts	A	B_1	B_2	C	D	E	F	G
9	30.8	16.9	16.4	25.00	19.3	1.37	2.74	12.50
15	39.1	25.2	24.7	33.30	27.5	1.37	2.74	16.65
25	53.0	38.9	38.5	47.04	41.3	1.40	2.77	23.52
37	69.3	55.3	54.9	63.50	57.7	1.40	2.77	31.75

Female connector

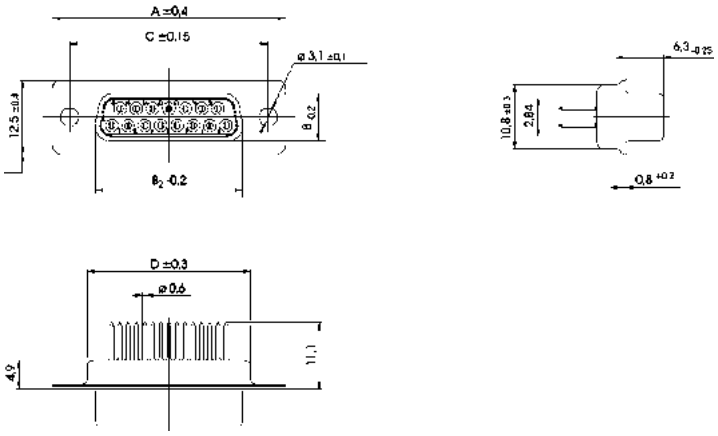

Board drillings

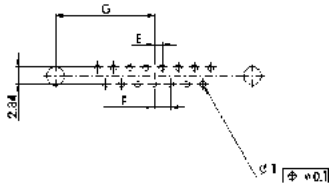

Number of contacts

9–37

Turned solder pins, straight, straight board clips

Identification	No. of contacts	Part number	
		male connectors	female connectors
Connectors with **47 pF** C filter	9	09 64 122 721 .	09 64 112 721 .
	15	09 64 222 721 .	09 64 212 721 .
	25	09 64 322 721 .	09 64 312 721 .
	37	09 64 422 721 .	09 64 412 721 .
Connectors with **470 pF** C filter	9	09 64 122 722 .	09 64 112 722 .
	15	09 64 222 722 .	09 64 212 722 .
	25	09 64 322 722 .	09 64 312 722 .
	37	09 64 422 722 .	09 64 412 722 .
Connectors with **1000 pF** C filter	9	09 64 122 723 .	09 64 112 723 .
	15	09 64 222 723 .	09 64 212 723 .
	25	09 64 322 723 .	09 64 312 723 .
	37	09 64 422 723 .	09 64 412 723 .
Connectors with **3900 pF** C filter	9	09 64 122 724 .	09 64 112 724 .
	15	09 64 222 724 .	09 64 212 724 .
	25	09 64 322 724 .	09 64 312 724 .
	37	09 64 422 724 .	09 64 412 724 .
Please insert digit for flange thread 4-40 UNC ▶ 5 M3 ▶ 6			

Number of contacts

9–37

Turned solder pins, straight, straight board clips

Identification	Drawing	Dimensions in mm

Male connector

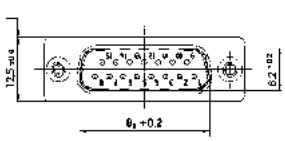
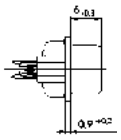
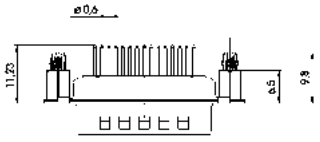
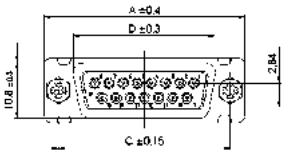

Female connector

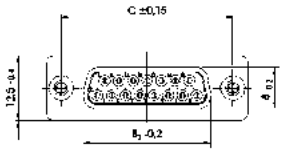
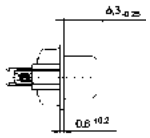
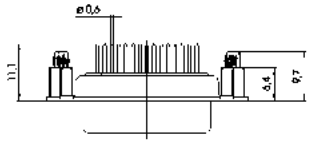

No. of contacts	A	B_1	B_2	C	D	E	F	G
9	30.8	16.9	16.4	25.00	19.3	1.37	2.74	12.50
15	39.1	25.2	24.7	33.30	27.5	1.37	2.74	16.65
25	53.0	38.9	38.5	47.04	41.3	1.40	2.77	23.52
37	69.3	55.3	54.9	63.50	57.7	1.40	2.77	31.75

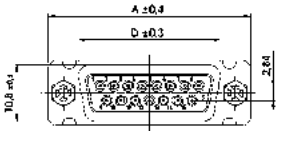

Board drillings

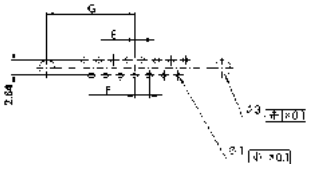

Number of contacts

9–37

Turned solder pins, right angled, bracket, board lock and clinch nut

Identification	No. of contacts	Part number	
		male connectors	female connectors
Connectors with **47 pF** C filter	9	09 64 124 721 .	09 64 114 721 .
	15	09 64 224 721 .	09 64 214 721 .
	25	09 64 324 721 .	09 64 314 721 .
	37	09 64 424 721 .	09 64 414 721 .
Connectors with **470 pF** C filter	9	09 64 124 722 .	09 64 114 722 .
	15	09 64 224 722 .	09 64 214 722 .
	25	09 64 324 722 .	09 64 314 722 .
	37	09 64 424 722 .	09 64 414 722 .
Connectors with **1000 pF** C filter	9	09 64 124 723 .	09 64 114 723 .
	15	09 64 224 723 .	09 64 214 723 .
	25	09 64 324 723 .	09 64 314 723 .
	37	09 64 424 723 .	09 64 414 723 .
Connectors with **3900 pF** C filter	9	09 64 124 724 .	09 64 114 724 .
	15	09 64 224 724 .	09 64 214 724 .
	25	09 64 324 724 .	09 64 314 724 .
	37	09 64 424 724 .	09 64 414 724 .
Please insert digit for flange thread 4-40 UNC ▶ 2 M3 ▶ 3			

Number of contacts

9–37

Turned solder pins, right angled, bracket, board lock and clinch nut

Identification	Drawing	Dimensions in mm

Male connector

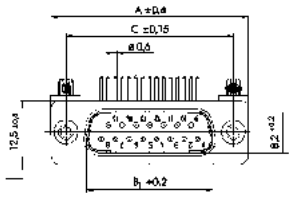

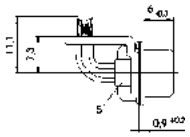

No. of contacts	A	B_1	B_2	C	E	F
9	30.8	16.9	16.4	25.00	1.37	2.74
15	39.1	25.2	24.7	33.30	1.37	2.74
25	53.0	38.9	38.5	47.04	1.40	2.77
37	69.3	55.3	54.9	63.50	1.40	2.77

Female connector

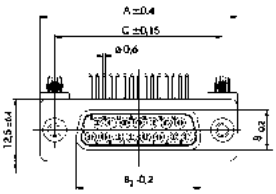

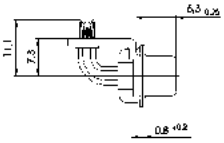

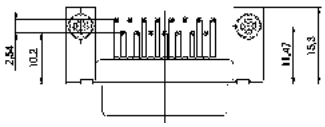

Board drillings

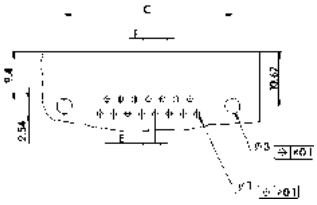

Number of contacts

9–37

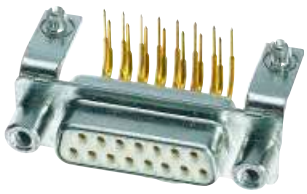

Turned solder pins, right angled, bracket, board lock and female screw

Identification	No. of contacts	Part number	
		male connectors	female connectors
Connectors with **47 pF** C filter	9	09 64 124 721 .	09 64 114 721 .
	15	09 64 224 721 .	09 64 214 721 .
	25	09 64 324 721 .	09 64 314 721 .
	37	09 64 424 721 .	09 64 414 721 .
Connectors with **470 pF** C filter	9	09 64 124 722 .	09 64 114 722 .
	15	09 64 224 722 .	09 64 214 722 .
	25	09 64 324 722 .	09 64 314 722 .
	37	09 64 424 722 .	09 64 414 722 .
Connectors with **1000 pF** C filter	9	09 64 124 723 .	09 64 114 723 .
	15	09 64 224 723 .	09 64 214 723 .
	25	09 64 324 723 .	09 64 314 723 .
	37	09 64 424 723 .	09 64 414 723 .
Connectors with **3900 pF** C filter	9	09 64 124 724 .	09 64 114 724 .
	15	09 64 224 724 .	09 64 214 724 .
	25	09 64 324 724 .	09 64 314 724 .
	37	09 64 424 724 .	09 64 414 724 .
Please insert digit for flange thread 4-40 UNC ▶ 4 M3 ▶ 5			

Number of contacts

9–37

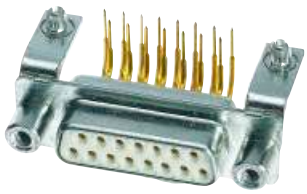

Turned solder pins, right angled, bracket, board lock and female screw

Identification	Drawing	Dimensions in mm

Male connector

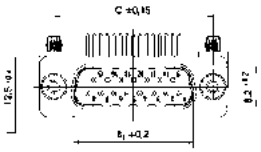
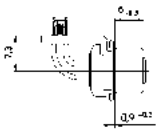

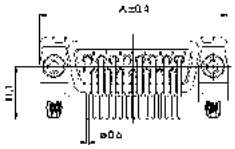

No. of contacts	A	B_1	B_2	C	E	F
9	30.8	16.9	16.4	25.00	1.37	2.74
15	39.1	25.2	24.7	33.30	1.37	2.74
25	53.0	38.9	38.5	47.04	1.40	2.77
37	69.3	55.3	54.9	63.50	1.40	2.77

Female connector

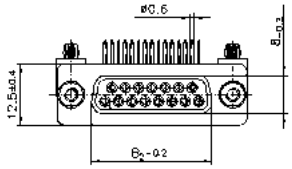
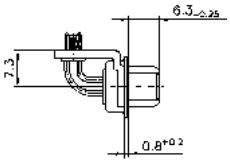
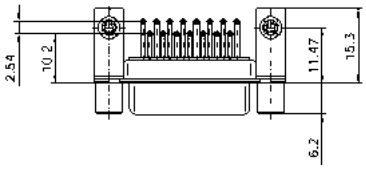
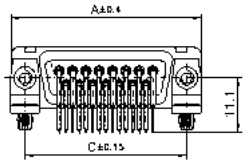

Board drillings

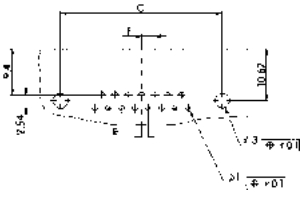

Number of contacts

9–37

Solder buckets, through hole

Identification	No. of contacts	Part number	
		male connectors	female connectors
Connectors with **47 pF** C filter	9	09 64 121 7210	09 64 111 7210
	15	09 64 221 7210	09 64 211 7210
	25	09 64 321 7210	09 64 311 7210
	37	09 64 421 7210	09 64 411 7210
Connectors with **470 pF** C filter	9	09 64 121 7220	09 64 111 7220
	15	09 64 221 7220	09 64 211 7220
	25	09 64 321 7220	09 64 311 7220
	37	09 64 421 7220	09 64 411 7220
Connectors with **1000 pF** C filter	9	09 64 121 7230	09 64 111 7230
	15	09 64 221 7230	09 64 211 7230
	25	09 64 321 7230	09 64 311 7230
	37	09 64 421 7230	09 64 411 7230
Connectors with **3900 pF** C filter	9	09 64 121 7240	09 64 111 7240
	15	09 64 221 7240	09 64 211 7240
	25	09 64 321 7240	09 64 311 7240
	37	09 64 421 7240	09 64 411 7240

Number of contacts

9–37

Solder buckets, through hole

Identification	Drawing	Dimensions in mm

Male connector

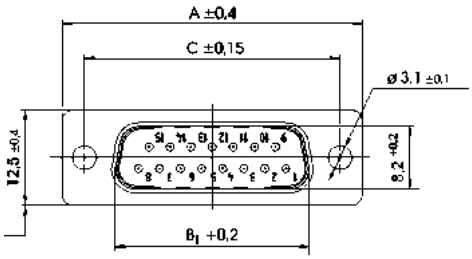

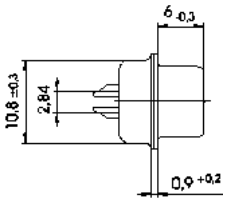

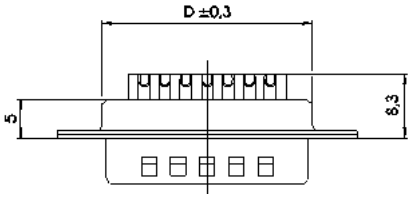

No. of contacts	A	B_1	B_2	C	D
9	30.8	16.9	16.4	25.00	19.3
15	39.1	25.2	24.7	33.30	27.5
25	53.0	38.9	38.5	47.04	41.3
37	69.3	55.3	54.9	63.50	57.7

Female connector

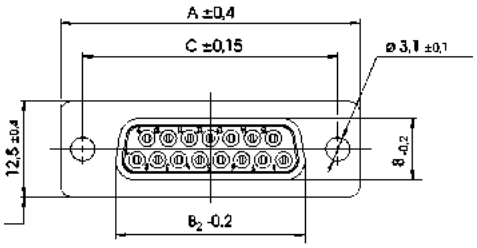

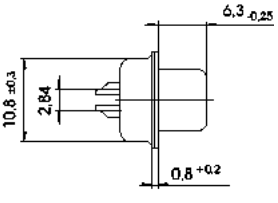

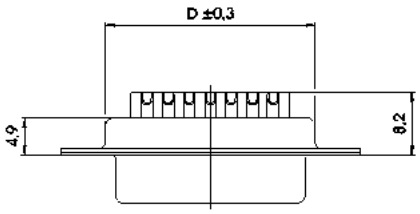

Panel cut outs see page 05.110

Number of contacts

9–37

Solder buckets, clinch nut

Identification	No. of contacts	Part number	
		male connectors	female connectors
Connectors with **47 pF** C filter	9	09 64 121 721 .	09 64 111 721 .
	15	09 64 221 721 .	09 64 211 721 .
	25	09 64 321 721 .	09 64 311 721 .
	37	09 64 421 721 .	09 64 411 721 .
Connectors with **470 pF** C filter	9	09 64 121 722 .	09 64 111 722 .
	15	09 64 221 722 .	09 64 211 722 .
	25	09 64 321 722 .	09 64 311 722 .
	37	09 64 421 722 .	09 64 411 722 .
Connectors with **1000 pF** C filter	9	09 64 121 723 .	09 64 111 723 .
	15	09 64 221 723 .	09 64 211 723 .
	25	09 64 321 723 .	09 64 311 723 .
	37	09 64 421 723 .	09 64 411 723 .
Connectors with **3900 pF** C filter	9	09 64 121 724 .	09 64 111 724 .
	15	09 64 221 724 .	09 64 211 724 .
	25	09 64 321 724 .	09 64 311 724 .
	37	09 64 421 724 .	09 64 411 724 .
Please insert digit for flange thread 4-40 UNC ▶ 7 M3 ▶ 8			

Number of contacts

9–37

Solder buckets, clinch nut

Identification	Drawing	Dimensions in mm

Male connector

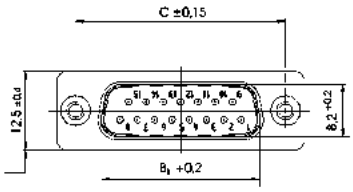

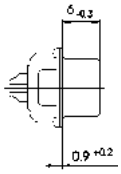

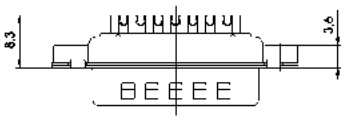

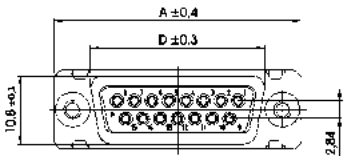

No. of contacts	A	B_1	B_2	C	D
9	30.8	16.9	16.4	25.00	19.3
15	39.1	25.2	24.7	33.30	27.5
25	53.0	38.9	38.5	47.04	41.3
37	69.3	55.3	54.9	63.50	57.7

Female connector

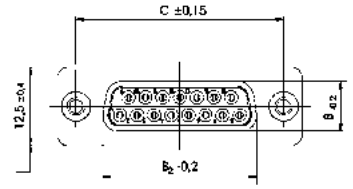

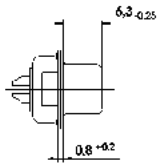

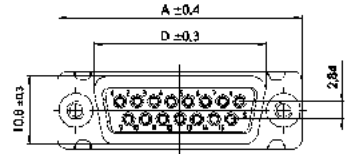

Panel cut outs see page 05.110

Panel cut outs / panel mountings

Panel cut outs

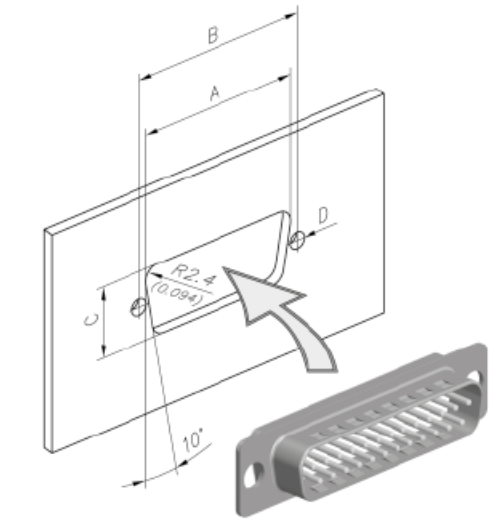

Front mounting

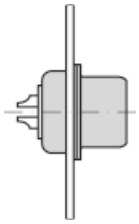

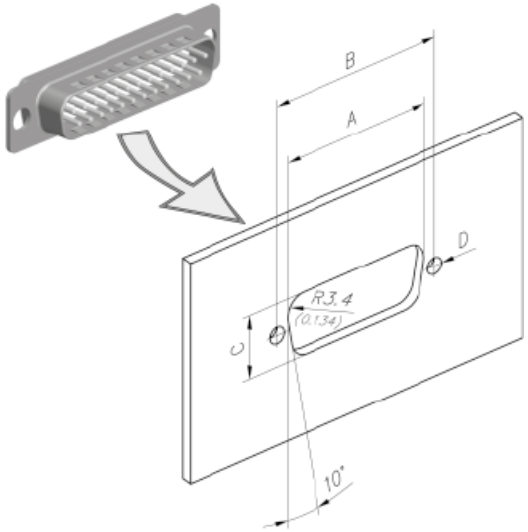

Rear mounting

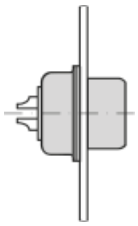

No. of contacts	Mounting assembly	A ± 0.2	B ± 0.2	C ± 0.2
9	Front	22.2	25.0	12.3
	Rear	20.5	25.0	11.4
15	Front	30.5	33.3	12.3
	Rear	28.8	33.3	11.4
25	Front	44.3	47.0	12.3
	Rear	42.5	47.0	11.4
37	Front	60.7	63.5	12.3
	Rear	59.1	63.5	11.4

Panel mountings

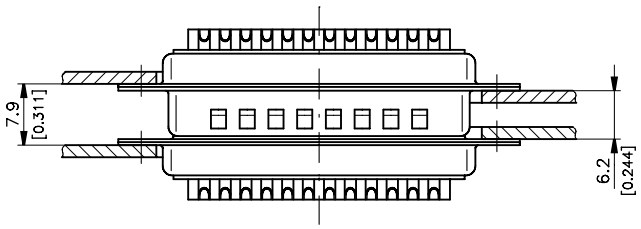

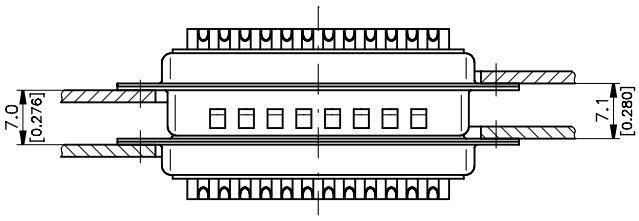

For float mounting option please contact your local HARTING representative.

Dimensions in mm

General information

With the innovative EMC platform approach, this enables customers to select their optimum filter requirements, contact per contact. Allowing not only to segregate the filtering per contact but also to mix the type of filter used. This is then cast in a single competitive product (in a standard D-Sub shell).

The biggest advantage of the HARTING technology is that multiple filter assemblies can be configured to create different filter designs: C, Pi, L and T types. Since any value of capacitor can be placed on any contact, a wide range of configurations can be built, it is even possible to have an individual pin unfiltered if necessary.

Furthermore, ***Pi filters can be supplied in a standard connector size shell***. In addition, protection against lightening and transient voltage can be included upon request.

In the next few pages, you will find all the necessary information plus a selection guide to help you to choose your appropriate solution.

or

+

- C filter
- L filter
- Pi filter
- ESD protection
- Lightening protection
- Combination

With any capacitance on any pin in **a standard D-Sub shell**.

All types of filter mixed D-Sub are also available on request.

General information

Filter possibilities

C filter:

Non exhaustive list of C filter values that HARTING can supply (for specials see page 05.114 ff)

C filter capacitance in pF	Minimum insertion loss								Max. working voltage	Max. dielectric withstanding
	Attenuation [dB] vs frequency [MHz]									
	0.1	1	5	10	50	100	500	1000		
47							30	35	500 V DC	750 V DC
100					1	3	40	35	500 V DC	750 V DC
150					1	6	45	35	500 V DC	750 V DC
180					1	10	40	32	500 V DC	750 V DC
270				1	3	12	35	32	500 V DC	750 V DC
330				1	7	13	35	32	500 V DC	750 V DC
470				1	10	15	35	32	500 V DC	750 V DC
820				2	10	18	30	30	500 V DC	750 V DC
1000			1	3	12	20	34	30	500 V DC	750 V DC
1800			2	6	17	30	35	32	500 V DC	750 V DC
3900		1	6	11	25	35	35	32	500 V DC	750 V DC
4700		1	9	13	30	38	35	32	500 V DC	750 V DC
5600		2	10	14	30	32	32	32	500 V DC	750 V DC
10000		1	10	15	30	32	30	30	200 V DC	500 V DC
33000	1	9	19	29	32	34	39	32	100 V DC	150 V DC
47000	1	11	23	30	32	32	35	32	100 V DC	150 V DC
100000	2	18	32	40	34	34	36	35	25 V DC	40 V DC

Pi filter:

Non exhaustive list of Pi filter values that HARTING can supply (for specials see page 05.114 ff)

Pi filter capacitance in pF	Minimum insertion loss								Max. working voltage	Max. dielectric withstanding
	Attenuation [dB] vs frequency [MHz]									
	0.1	1	5	10	50	100	500	1000		
94						2	35	50	200 V DC	500 V DC
200					1	8	50	40	200 V DC	500 V DC
440				1	8	16	50	40	200 V DC	500 V DC
940				2	12	24	50	40	200 V DC	500 V DC
2000			2	7	17	40	45	40	200 V DC	500 V DC
4400			5	10	28	60	45	40	200 V DC	500 V DC
9400		2	10	15	48	50	45	40	200 V DC	500 V DC
20000		5	14	20	50	60	52	48	100 V DC	250 V DC
94000	2	15	32	50	51	52	48	42	50 V DC	125 V DC
200000	7	21	48	65	55	52	48	42	16 V DC	25 V DC

General information

Other protection possibilities

ESD protection

(Electro Static Discharge protection)

For equipment to comply with:

- IEC-1000-4-2; levels 1 to 4 (Contact discharge test)
- RTCA-160 D; section 25

Typical parasitic capacitance (pF)	Max. clamp voltage (V)	Working voltage (V)
0.5 V_{rms} @ 1 KHz	@ I = 1 A @ 8/20 µS	@ I = 10 µA
1750	7.5	3
1250	13	5
650	22	12
430	33	18
220	48	26
200	51	30

EMP protection

(Electro Magnetic Pulse protection)

For equipment to comply with:

- MIL-STD-461 C: requirements CS 06, CS 10, CS 11, RS 05
- IEC-1000-4-4; EFT TESTS
- RTCA-160 D; section 17

Typical parasitic capacitance (pF)	Max. clamp voltage (V)	Working voltage (V)
0.5 V_{rms} @ 1 KHz	@ I = 10 A @ 8/20 µS	@ I = 10 µA
5675	9	3
3620	15	5
1500	26	14
820	34	18
275	50	26

Lightening protection

For equipment to comply with:

- IEC-1000-4-5; levels 1 and 2 (1.2 µ / 50 µS)
- RTCA-160 D; section 22 (pin injection, level 1)

Typical parasitic capacitance (pF)	Max. clamp voltage (V)	Working voltage (V)
0.5 V_{rms} @ 1 KHz	@ I = 30 A @ 8/20 µS	@ I = 10 µA
5500	12	3
3175	18	5
2000	21	9
1680	30	14
900	38	18
720	60	26
600	63	30

HARTING customer request form

Our innovative technology offers all the possibilities you may need.

For customer solutions, please contact your local HARTING representative.

Here is a summary of the information we need to develop a customer solution:

Connector

Standard D-Sub	Gender	☐ Male		☐ Female		
	No. of contacts	☐ 9	☐ 15	☐ 25	☐ 37	☐ 50
	Termination	☐ Solder bucket		☐ Straight pcb		
		☐ R/A Eur, 2.54 mm		☐ R/A US, 2.84 mm		
Mixed D-Sub	Gender	☐ Male		☐ Female		
	Contact arrangement	☐ 3W3	☐ 3W3C	☐ Other _____		
	Power contact rating	☐ 10 A	☐ 20 A	☐ 30 A	☐ 40 A	
	Termination	☐ Solder bucket		☐ Straight pcb		
		☐ R/A pcb (please specify the board drillings)				

Flange thread and board locking options

Right angled version

☐ Through hole
☐ Clinch nut 4-40 UNC
☐ Clinch nut M3
☐ Bracket
☐ Board lock
☐ Female screw lock 4-40 UNC
☐ Female screw lock M3

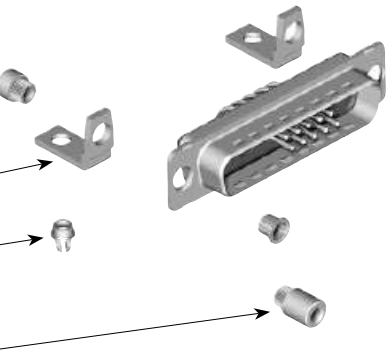

Straight version

☐ Through hole
☐ Clinch nut 4-40 UNC
☐ Clinch nut M3
☐ Spacer 4-40 UNC
☐ Spacer M3
☐ Female screw lock 4-40 UNC
☐ Spacer 4-40 UNC + board lock
☐ Spacer M3 + board lock

Spacer + board lock and female screw lock
☐ M3 ☐ 4-40 UNC

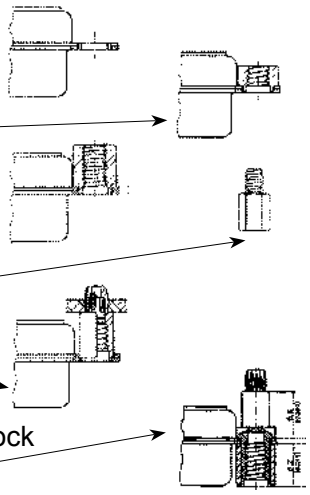

HARTING customer request from

Filter

What working voltage is used? _____

What is the maximum dielectric withstanding voltage needed? _____

Type of filter _____ (C filter, Pi filter*, L filter …)

Capacitance _____

Are there other protections needed? ☐ No ☐ Yes ☐ ESD ☐ Transient ☐ EMP ☐ Lightening

If a pin-to-pin selection has to be done, please state the details Pin 1: ?, Pin 2: ?, …

_____

Name: _____ Drawing: ☐ no ☐ yes

Company: _____ Samples: ☐ no ☐ yes, quantity

Address: _____ Volume (pcs./year): _____

_____ _____

Phone: _____ Special requirements: _____

Fax: _____ _____

E-Mail: _____ _____

* only available for male connectors

Number of contacts	9, 15, 25, 37, 50 UL recognized
Working current	5 A
Test voltage between 2 contacts / contact and shell	1200 V for 1 minute
Clearance and creepage	≥ 1.0 mm
Contact resistance	
Straight contact	≤ 10 mΩ
Angled contact	≤ 25 mΩ
Angled contact 50-pole	≤ 35 mΩ
Insulation resistance	
between contacts	≥ 5000 MΩ
Dielectric strength	50 kV/mm
Temperature range	-25 °C … +70 °C
Protection	IP67 (per DIN 40 050 / IEC 529)
Termination	
Solder cup	max. AWG 20
Solder pin straight	0.6 mm diameter
Solder pin angled	0.6 mm diameter
Material	
Shell	Brass, tin plated
Insulator and plastic watertight frame	Thermoplastic, glass-fibre filled, UL 94-V0
Metal watertight frame	Nickel plated zinc die cast
Contact material	Machined copper alloy
Contact surface	
Contact zone	S4 = 0.76 µm (30 µinch) Au or PdNi equivalent
Waterproofing element	Silicone
Mechanical	
Mating cycles	≥ 500
Mating force per signal contact	≤ 3.4 N
Unmating force per signal contact	≥ 0.2 N

Contact arrangement View from termination side

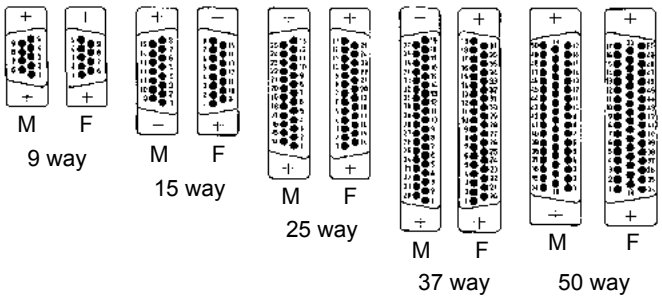

M = Male connector
F = Female connector

Mating conditions as per DIN 41 652

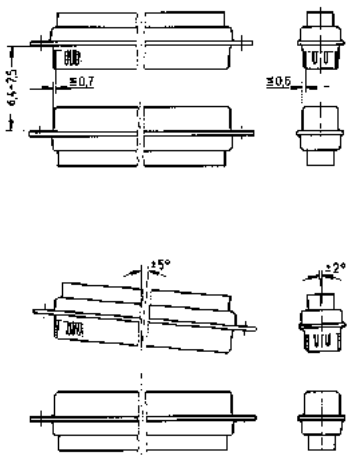

Notes

Number of contacts

9–50

IP67, turned solder cups

Identification	No. of contacts	Part number
		S4[1)]
Male connector metal shell with dimples	9	09 67 409 5615
	15	09 67 415 5615
	25	09 67 425 5615
	37	09 67 437 5615
	50	09 67 450 5615
Female connector metal shell	9	09 67 409 4715
	15	09 67 415 4715
	25	09 67 425 4715
	37	09 67 437 4715
	50	09 67 450 4715

[1)] S4 = 0.76 µm (30 µinch) Au or PdNi eqivalent

Number of contacts

9–50

IP67, turned solder cups

Identification	Drawing	Dimensions in mm

Male connector
9 – 50 contacts

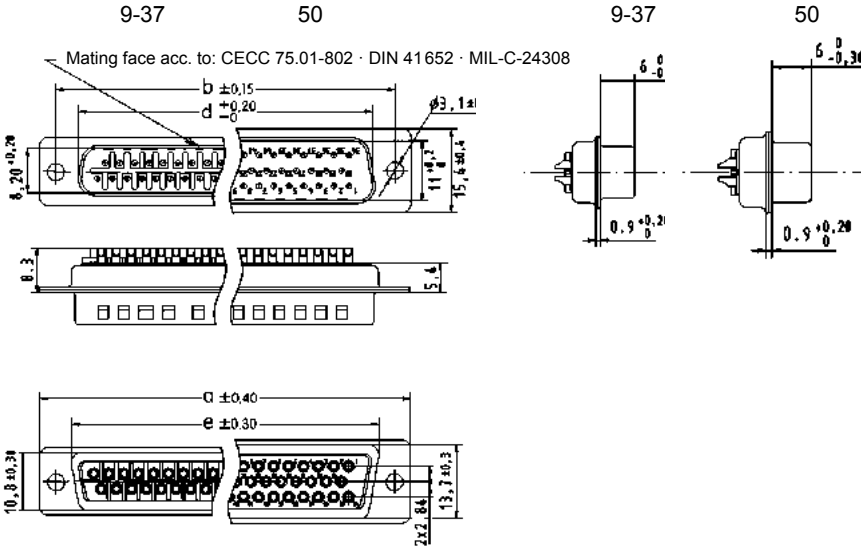

Female connector
9 – 50 contacts

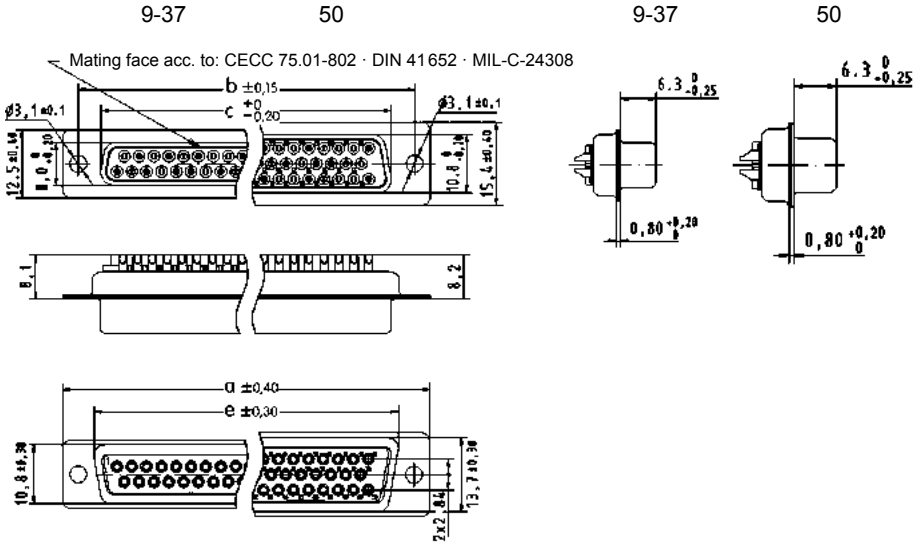

	a	b	c	d	e
9	30.8	25.00	16.4	16.9	19.3
15	39.1	33.30	24.7	25.2	27.5
25	53.0	47.04	38.5	38.9	41.3
37	69.3	63.50	54.9	55.3	57.7
50	66.9	61.10	52.5	52.8	55.3

Number of contacts

9–25

IP67, turned solder cups, with rear plastic mounting plate

Identification	No. of contacts	Part number S4[1)]
Male connector metal shell with dimples		
	9	09 67 509 . 615
	15	09 67 515 . 615
	25	09 67 525 . 615
Please insert digit for flange thread		
4-40 UNC ▶ 7		
M3 ▶ 9		
Female connector metal shell		
	9	09 67 509 . 715
	15	09 67 515 . 715
	25	09 67 525 . 715
Please insert digit for flange thread		
4-40 UNC ▶ 6		
M3 ▶ 8		

[1)] S4 = 0.76 µm (30 µinch) Au or PdNi eqivalent

Number of contacts

9–25

IP67, turned solder cups, with rear plastic mounting plate

Identification	Drawing	Dimensions in mm

Male connector

9 – 25 contacts

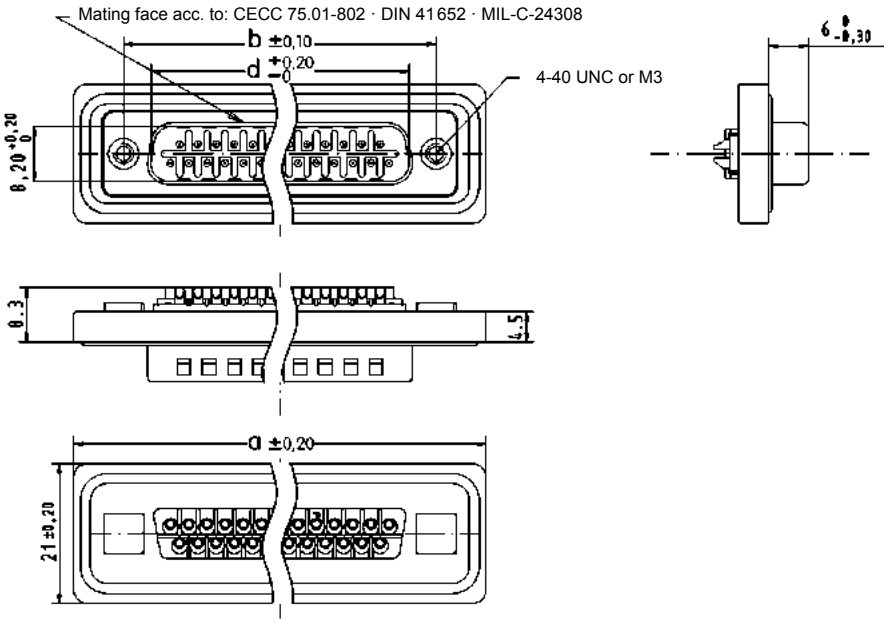

Female connector

9 – 25 contacts

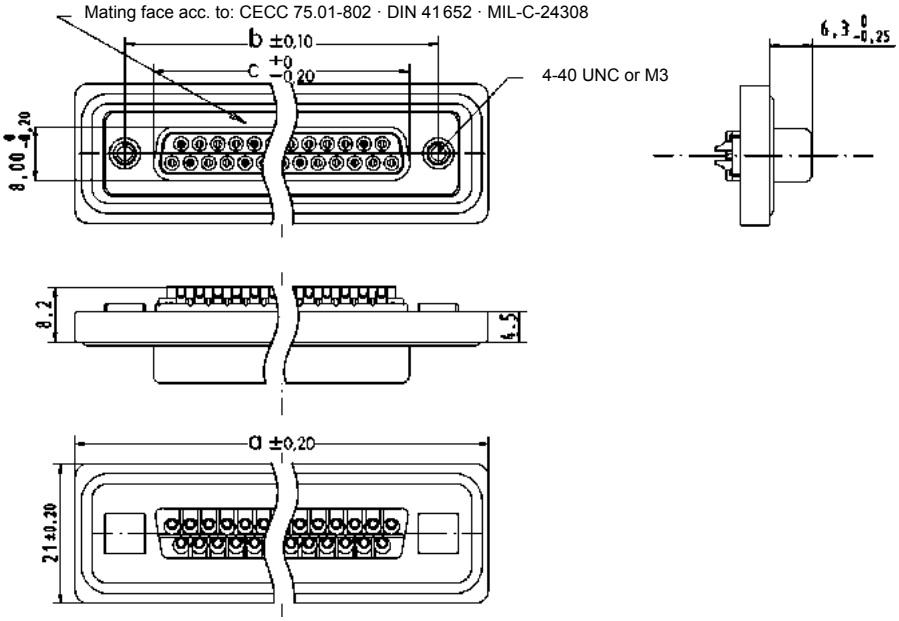

	a	b	c	d
9	40.0	25.00	16.4	16.9
15	48.3	33.30	24.7	25.2
25	62.0	47.04	38.5	38.9

Number of contacts

9–25

IP67, turned solder cups, with front plastic mounting plate

Identification	No. of contacts	Part number
		S4[1)]
Male connector metal shell with dimples		
	9	09 67 709 . 615
	15	09 67 715 . 615
	25	09 67 725 . 615
Please insert digit for flange thread		
4-40 UNC ▶ 7		
M3 ▶ 9		
Female connector metal shell		
	9	09 67 709 . 715
	15	09 67 715 . 715
	25	09 67 725 . 715
Please insert digit for flange thread		
4-40 UNC ▶ 6		
M3 ▶ 8		

[1)] S4 = 0.76 µm (30 µinch) Au or PdNi eqivalent

Number of contacts

9–25

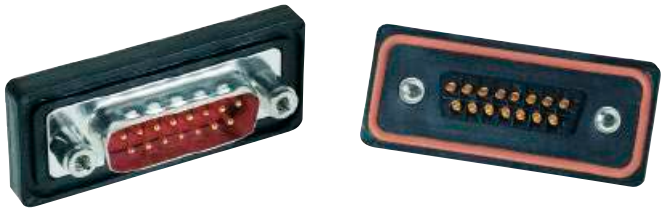

IP67, turned solder cups, with front plastic mounting plate

Identification	Drawing	Dimensions in mm

Male connector

9 – 25 contacts

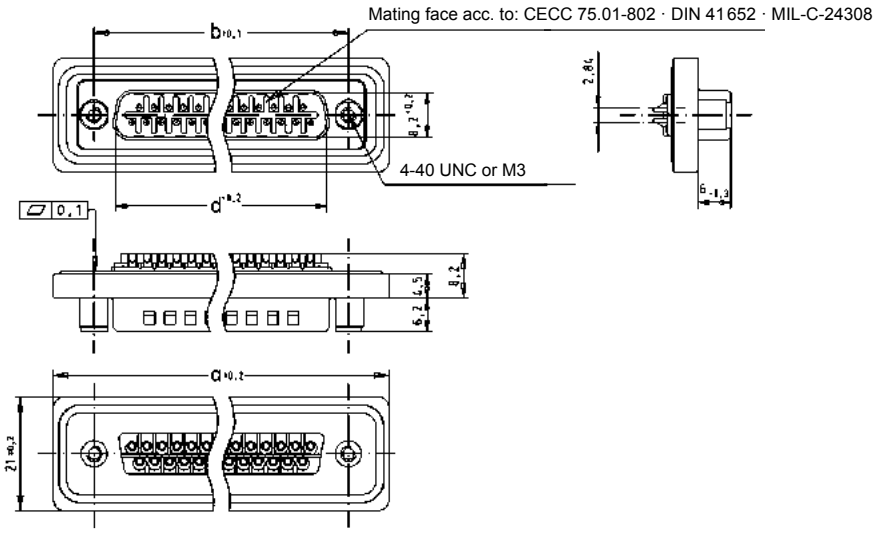

Female connector

9 – 25 contacts

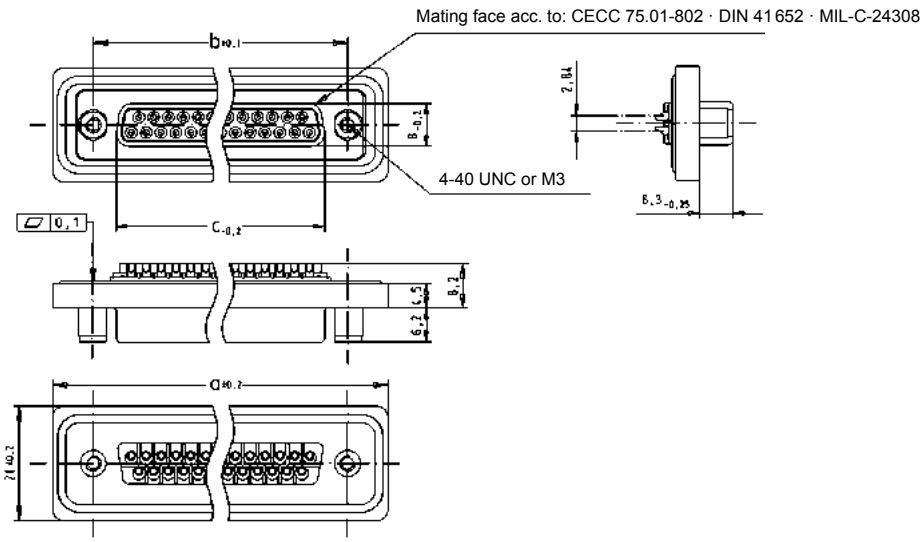

	a	b	c	d
9	40.0	25.00	16.4	16.9
15	48.3	33.30	24.7	25.2
25	62.0	47.04	38.5	38.9

Panel cut out for front/rear mount

Values are taken from the CECC 75301-802

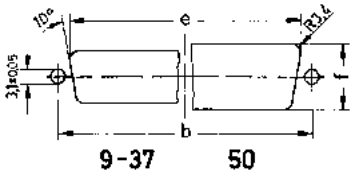

Front mount

	$b_{\pm 0.13}$	$e_{\pm 0.2}$	$f_{\pm 0.2}$
9	25.0	22.2	12.3
15	33.3	30.5	12.3
25	47.0	44.3	12.3

Rear mount

	$b_{\pm 0.13}$	$e_{\pm 0.2}$	$f_{\pm 0.2}$
9	25.0	20.5	11.4
15	33.3	28.8	11.4
25	47.0	42.5	11.4

Number of contacts

9–50

IP67, turned solder cups, with rear metal mounting plate

Identification	No. of contacts	Part number S4[1]
Male connector metal shell with dimples		
	9	09 67 609 . 615
	15	09 67 615 . 615
	25	09 67 625 . 615
	37	09 67 637 . 615
	50	09 67 650 . 615
Please insert digit for flange thread		
4-40 UNC ▶ 7		
M3 ▶ 9		
Female connector metal shell		
	9	09 67 609 . 715
	15	09 67 615 . 715
	25	09 67 625 . 715
	37	09 67 637 . 715
	50	09 67 650 . 715
Please insert digit for flange thread		
4-40 UNC ▶ 6		
M3 ▶ 8		

[1] S4 = 0.76 µm (30 µinch) Au or PdNi eqivalent

Number of contacts

9–50

IP67, turned solder cups, with rear metal mounting plate

Identification	Drawing	Dimensions in mm

Male connector

9 – 50 contacts

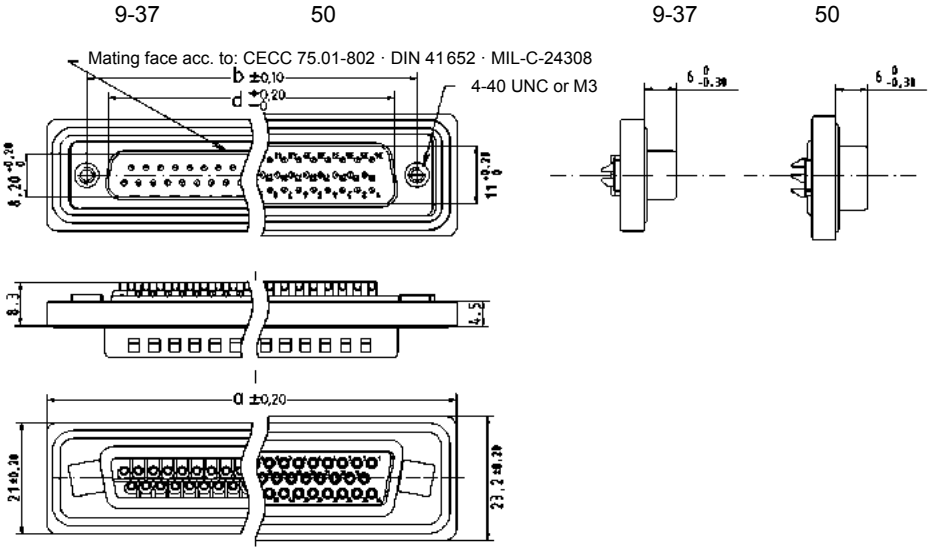

Female connector

9 – 50 contacts

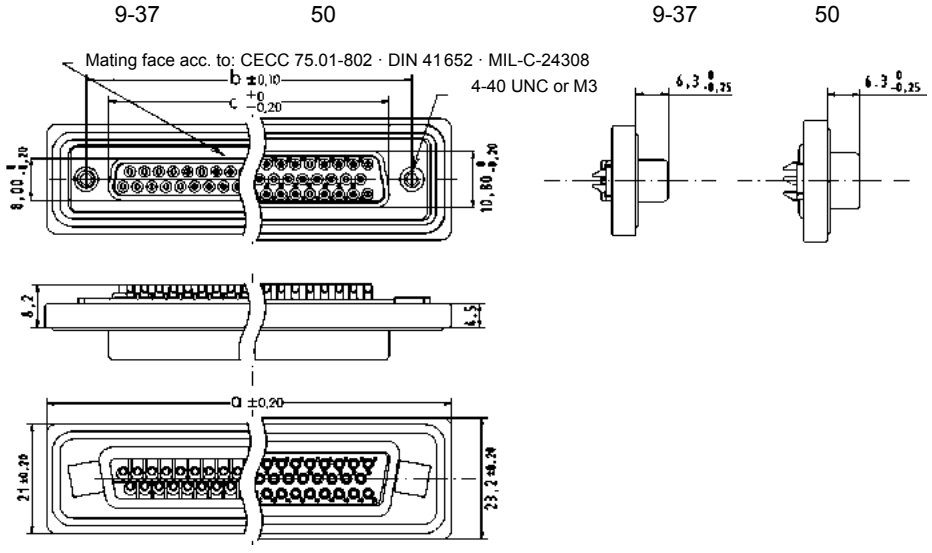

	a	b	c	d
9	40,0	25,00	16,4	16,9
15	48,3	33,30	24,7	25,2
25	62,0	47,04	38,5	38,9
37	78,5	63,50	54,9	55,3
50	76,1	61,10	52,5	52,8

Number of contacts

9–50

IP67, turned solder cups, with front metal mounting plate

Identification	No. of contacts	Part number
		S4[1]
Male connector metal shell with dimples		
	9	09 67 809 . 615
	15	09 67 815 . 615
	25	09 67 825 . 615
	37	09 67 837 . 615
	50	09 67 850 . 615
Please insert digit for flange thread		
4-40 UNC ▶ 7		
M3 ▶ 9		
Female connector metal shell		
	9	09 67 809 . 715
	15	09 67 815 . 715
	25	09 67 825 . 715
	37	09 67 837 . 715
	50	09 67 850 . 715
Please insert digit for flange thread		
4-40 UNC ▶ 6		
M3 ▶ 8		

[1] S4 = 0.76 µm (30 µinch) Au or PdNi eqivalent

Number of contacts

9–50

IP67, turned solder cups, with front metal mounting plate

Identification	Drawing	Dimensions in mm

Male connector

9 – 50 contacts

9-37 50 9-37 50

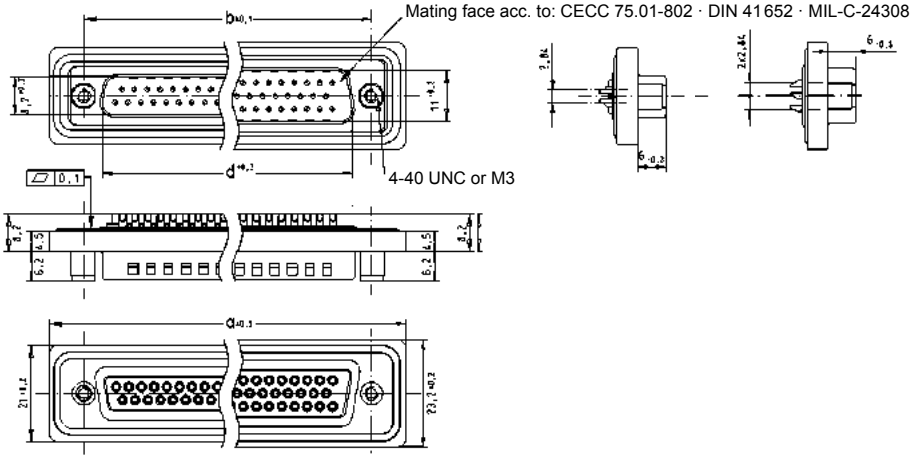

Female connector

9 – 50 contacts

9-37 50 9-37 50

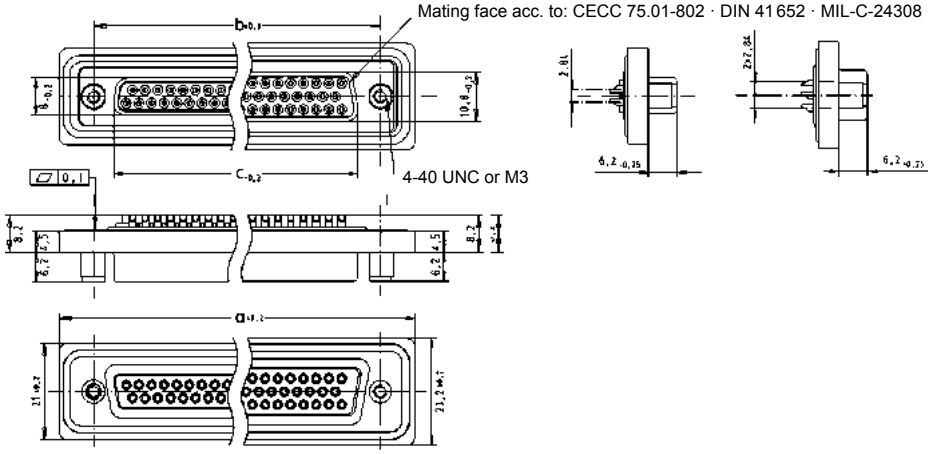

	a	b	c	d
9	40.0	25.00	16.4	16.9
15	48.3	33.30	24.7	25.2
25	62.0	47.04	38.5	38.9
37	78.5	63.50	54.9	55.3
50	76.1	61.10	51.3	52.8

Panel cut out for front/rear mount

Values are taken from the CECC 75301-802

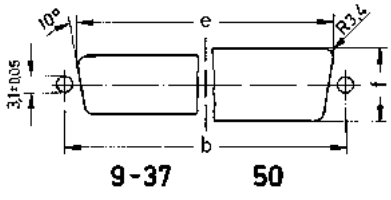

Front mount

	$b_{\pm 0.13}$	$e_{\pm 0.2}$	$f_{\pm 0.2}$
9	25.0	22.2	12.3
15	33.3	30.5	12.3
25	47.0	44.3	12.3
37	63.5	60.7	12.3
50	61.1	58.3	15.1

Rear mount

	$b_{\pm 0.13}$	$e_{\pm 0.2}$	$f_{\pm 0.2}$
9	25.0	20.5	11.4
15	33.3	28.8	11.4
25	47.0	42.5	11.4
37	63.5	59.1	11.4
50	61.1	56.3	14.1

Number of contacts

9–25

IP67, straight turned solder pins,
with rear plastic mounting plate, spacer and board lock

Identification	No. of contacts	Part number S4[1)]
Male connector metal shell with dimples		
	9	09 67 509 . 675
	15	09 67 515 . 675
	25	09 67 525 . 675
Please insert digit for flange thread		
4-40 UNC ▶	7	
M3 ▶	9	
Female connector metal shell		
	9	09 67 509 . 775
	15	09 67 515 . 775
	25	09 67 525 . 775
Please insert digit for flange thread		
4-40 UNC ▶	6	
M3 ▶	8	

[1)] S4 = 0.76 µm (30 µinch) Au or PdNi eqivalent

Number of contacts

9–25

IP67, straight turned solder pins,
with rear plastic mounting plate, spacer and board lock

Identification	Drawing	Dimensions in mm

Male connector
9 – 25 contacts

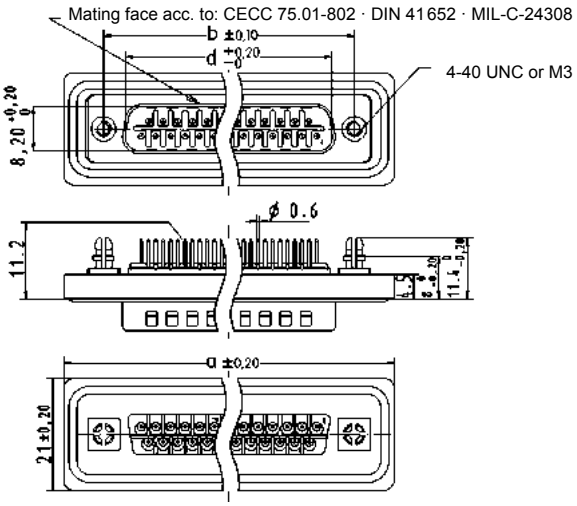

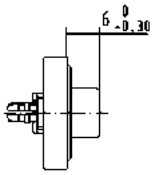

Female connector
9 – 25 contacts

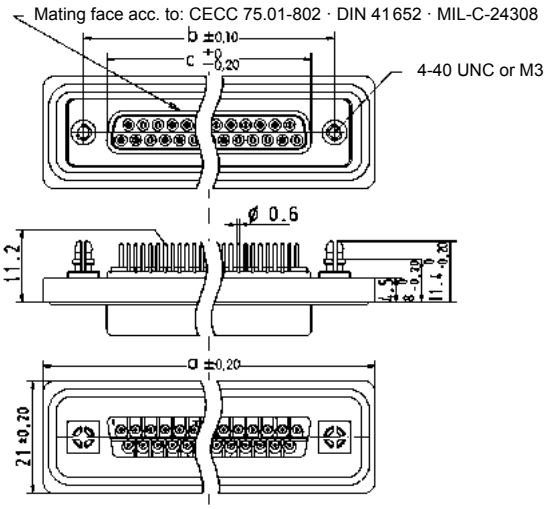

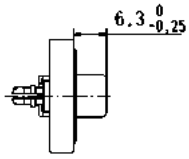

	a	b	c	d	g	h	i
9	40.0	25.00	16.4	16.9	4 x 2.74 = 10.96	3 x 2.74 = 8.22	25.0
15	48.3	33.30	24.7	25.2	7 x 2.74 = 19.18	6 x 2.74 = 16.44	33.3
25	62.0	47.04	38.5	38.9	12 x 2.76 = 33.12	11 x 2.76 = 30.36	47.0

Board drillings

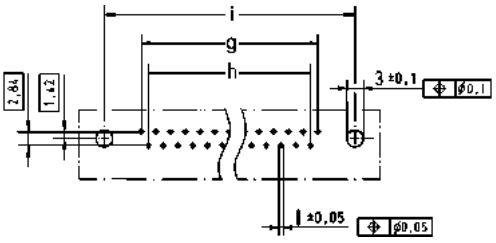

Number of contacts

9–50

IP67, straight turned solder pins,
with rear metal mounting plate, spacer and board lock

Identification	No. of contacts	Part number S4[1)]
Male connector metal shell with dimples		
	9	09 67 609 . 675
	15	09 67 615 . 675
	25	09 67 625 . 675
	37	09 67 637 . 675
	50	09 67 650 . 675
Please insert digit for flange thread		
4-40 UNC ▶ 7		
M3 ▶ 9		
Female connector metal shell		
	9	09 67 609 . 775
	15	09 67 615 . 775
	25	09 67 625 . 775
	37	09 67 637 . 775
	50	09 67 650 . 775
Please insert digit for flange thread		
4-40 UNC ▶ 6		
M3 ▶ 8		

[1)] S4 = 0.76 µm (30 µinch) Au or PdNi eqivalent

Number of contacts

9–50

IP67, straight turned solder pins,
with rear metal mounting plate, spacer and board lock

Identification	Drawing	Dimensions in mm

Male connector

9 – 50 contacts

9-37 50

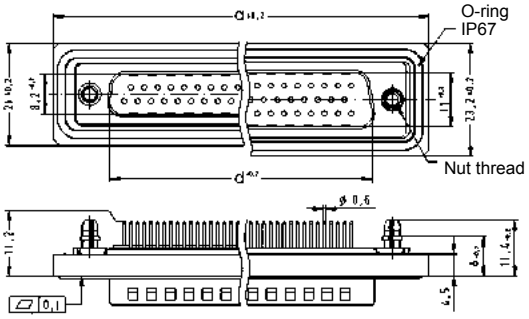

9-37 50

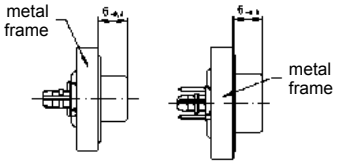

Female connector

9 – 50 contacts

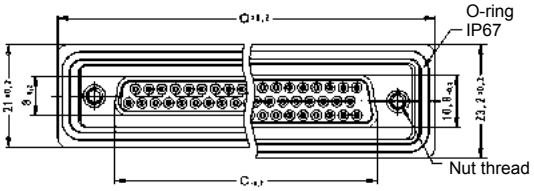

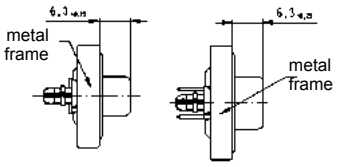

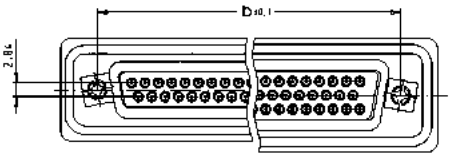

	a	b	c	d	g	h
9	40.0	25.00	16.4	16.9	4 x 2.74 = 10.96	3 x 2.74 = 8.22
15	48.3	33.30	24.7	25.2	7 x 2.74 = 19.18	6 x 2.74 = 16.44
25	62.0	47.04	38.5	38.9	12 x 2.76 = 33.12	11 x 2.76 = 30.36
37	78.5	63.50	54.9	55.3	18 x 2.76 = 49.68	17 x 2.76 = 46.92
50	76.1	61.10	52.5	52.8	16 x 2.76 = 44.16	15 x 2.76 = 41.40

Board drillings

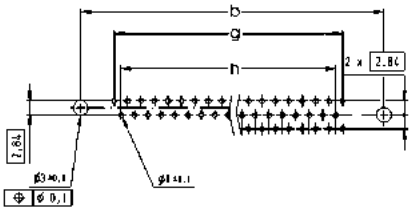

Number of contacts

9–25

IP67, angled turned solder pins,
with rear plastic mounting plate, bracket and board lock

Identification	No. of contacts	Part number S4[1)]
Male connector metal shell with dimples		
	9	09 67 509 . 658
	15	09 67 515 . 658
	25	09 67 525 . 658
Please insert digit for flange thread		
4-40 UNC ▶ 7		
M3 ▶ 9		
Female connector metal shell		
	9	09 67 509 . 758
	15	09 67 515 . 758
	25	09 67 525 . 758
Please insert digit for flange thread		
4-40 UNC ▶ 6		
M3 ▶ 8		

[1)] S4 = 0.76 µm (30 µinch) Au or PdNi eqivalent

Number of contacts

9–25

IP67, angled turned solder pins,
with rear plastic mounting plate, bracket and board lock

Identification	Drawing	Dimensions in mm

Male connector
9 – 25 contacts

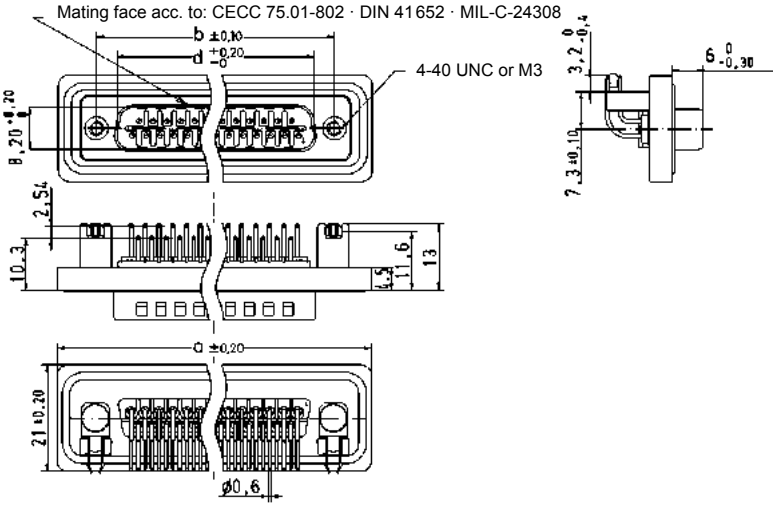

Female connector
9 – 25 contacts

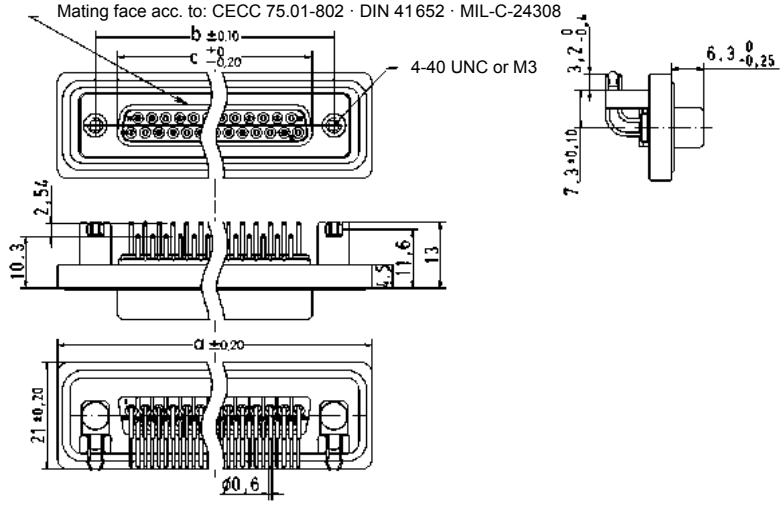

	a	b	c	d	g	h	i
9	40.0	25.00	16.4	16.9	4 x 2.74 = 10.96	3 x 2.74 = 8.22	25.0
15	48.3	33.30	24.7	25.2	7 x 2.74 = 19.18	6 x 2.74 = 16.44	33.3
25	62.0	47.04	38.5	38.9	12 x 2.76 = 33.12	11 x 2.76 = 30.36	47.0

Board drillings

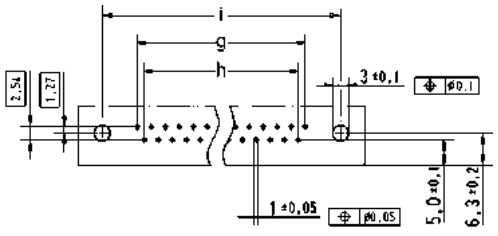

Number of contacts

9–50

IP67, angled turned solder pins,
with rear metal mounting plate, bracket and board lock

Identification	No. of contacts	Part number
		S4[1)]
Male connector metal shell with dimples		
	9	09 67 609 . 658
	15	09 67 615 . 658
	25	09 67 625 . 658
	37	09 67 637 . 658
	50	09 67 650 . 658
Please insert digit for flange thread		
4-40 UNC ▶ 7		
M3 ▶ 9		
Female connector metal shell		
	9	09 67 609 . 758
	15	09 67 615 . 758
	25	09 67 625 . 758
	37	09 67 637 . 758
	50	09 67 650 . 758
Please insert digit for flange thread		
4-40 UNC ▶ 6		
M3 ▶ 8		

[1)] S4 = 0.76 µm (30 µinch) Au or PdNi eqivalent

Number of contacts

9–50

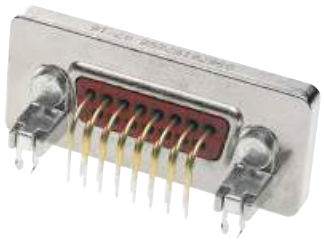

IP67, angled turned solder pins,
with rear metal mounting plate, bracket and board lock

Identification	Drawing	Dimensions in mm

Male connector
9 – 50 contacts

Female connector
9 – 50 contacts

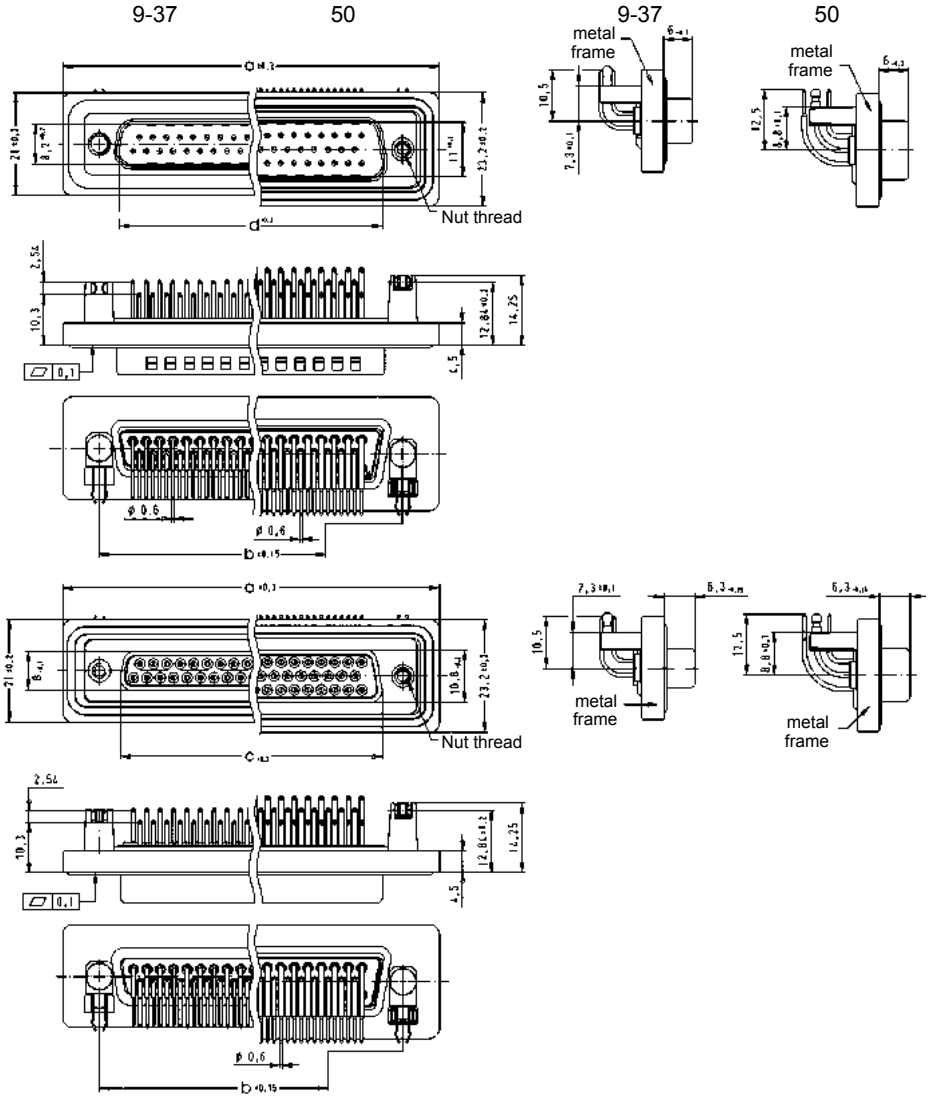

	a	b	c	d	g	h
9	40.0	25.00	16.4	16.9	4 x 2.74 = 10.96	3 x 2.74 = 8.22
15	48.3	33.30	24.7	25.2	7 x 2.74 = 19.18	6 x 2.74 = 16.44
25	62.0	47.04	38.5	38.9	12 x 2.76 = 33.12	11 x 2.76 = 30.36
37	78.5	63.50	54.9	55.3	18 x 2.76 = 49.68	17 x 2.76 = 46.92
50	76.1	61.10	52.5	52.8	16 x 2.76 = 44.16	15 x 2.76 = 41.40

Board drillings

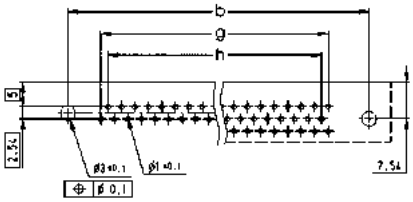

IP67 plastic hoods
IP67 metallized plastic hoods
for rear mount

Identification	No. of contacts	Part number
Hood[1]		
Black thermoplastic		
	9	09 67 009 043 .
	15	09 67 015 043 .
	25	09 67 025 043 .
	37	09 67 037 043 .
	50	09 67 050 043 .
Metallized thermo-plastic		
	9	09 67 009 053 .
	15	09 67 015 053 .
	25	09 67 025 053 .
	37	09 67 037 053 .
	50	09 67 050 053 .
Please insert digit for screw option		
Locking screw, thread 4-40 UNC ▶ 8		
Locking screw, ▶ 9 thread M3		

Drawing

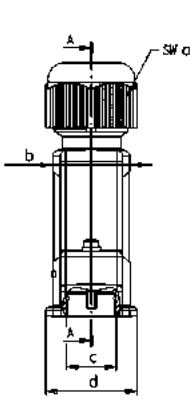

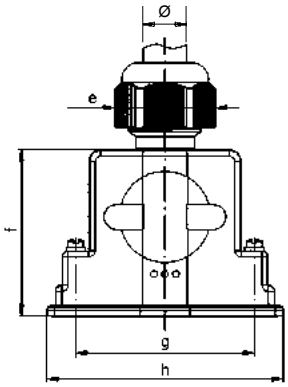

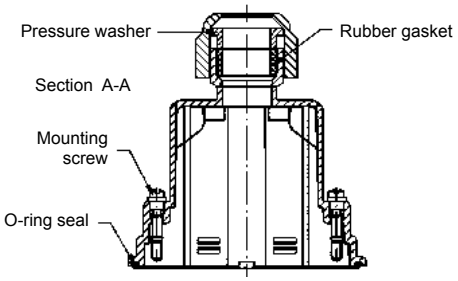

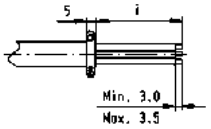

Stripping dimensions

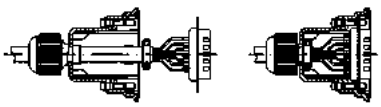

Mounting instructions:

– The peeled back cable braiding must not extend over the cable clamp, in order not to damage the gasket or to impair its performance.
– Pull back cable until cable clamp snaps into shielding plate.
– Snap connector into hood.

	a	b	c	d	e	f	g	h	i	Ø min.	Ø max.
9	20	16.5	13.0	20.2	22.1	36.4	25.0	39.8	18.0	6.0	8.0
15	24	16.5	13.0	20.2	26.6	36.4	33.3	48.5	18.0	6.0	10.5
25	24	20.3	13.0	24.0	26.6	43.6	47.0	62.3	45.0	8.0	12.0
37	24	20.3	13.0	24.0	26.6	52.1	63.5	78.6	60.0	8.0	12.0
50	29	22.0	16.0	27.6	32.1	52.1	61.1	75.7	60.0	9.0	14.0

[1] Not to be used with 9 to 50-pole crimp connectors

Accessories for IP67 connectors

Identification	No. of contacts	Part number	Drawing	Dimensions in mm
Front sealing rubber[1] IP67	9	09 67 002 9001	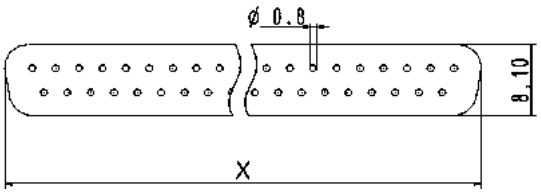	x: 9 → 16.7; 15 → 24.8; 25 → 38.8
Mounting example	15	09 67 002 9002		
	25	09 67 002 9003		
Female screw lock and spacing washer[2] M3		09 67 002 9006	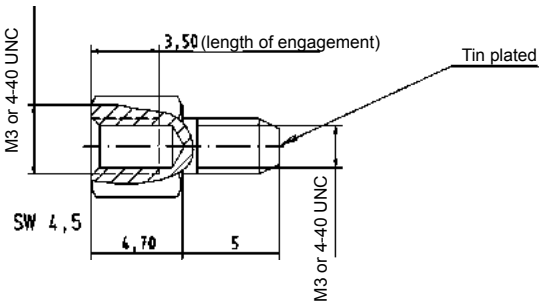	
4-40 UNC		09 67 002 9007		
[2] Order 2 for each connector				
Dust cap for female connectors[3] M3	9	09 67 002 9055	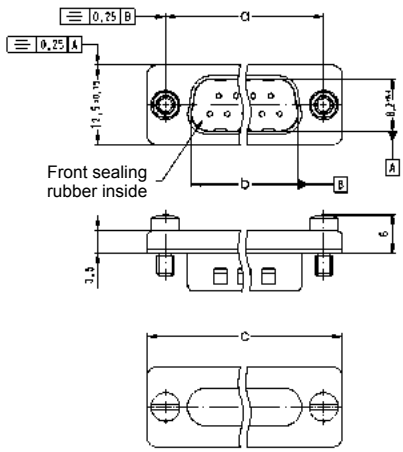 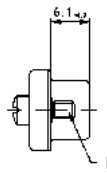 IP67 shielding concept Front seal glued to shielding dust cap 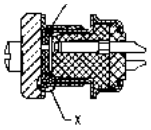 Detail X (Scale 5:1)	a: 9 → 25.00; 15 → 33.30; 25 → 47.04 b: 9 → 16.9; 15 → 25.2; 25 → 38.9 c: 9 → 30.8; 15 → 39.1; 25 → 53.0 d: 9 → 16.4; 15 → 24.7; 25 → 38.5
	15	09 67 002 9056		
	25	09 67 002 9057		
4-40 UNC	9	09 67 002 9050		
	15	09 67 002 9051		
	25	09 67 002 9052		
[3] With inside glued front sealing rubber				
for male connectors[4] M3	9	09 67 002 9065	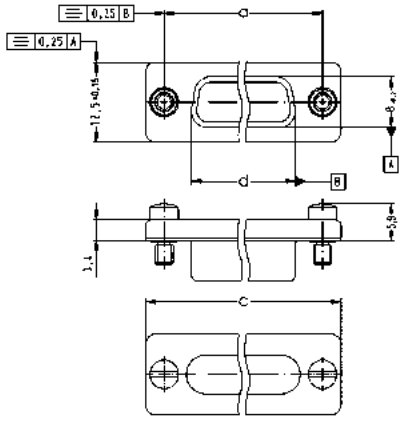 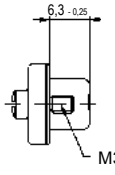 IP67 shielding concept Front sealing rubber is mounted in male connector sealed 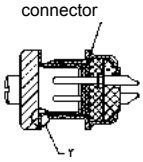 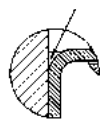 Detail Y (Scale 5:1)	
	15	09 67 002 9066		
	25	09 67 002 9067		
4-40 UNC	9	09 67 002 9060		
	15	09 67 002 9061		
	25	09 67 002 9062		
[4] Order separately the front sealing rubber for an IP67 performance				

[1] The front sealing rubber is to be used with hood 09 67 0xx 0436 and 09 67 0xx 0437 when a mated system needs to have the IP67 performance; in this case, the front sealing rubber is positioned in the IP67 male connector prior to the mating operation with the facing IP67 connector; it provides a full protection of the contacts at the mated area by preventing possible ingress of liquids or dust between the shells.

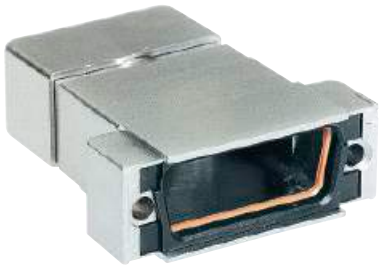

IP67 plastic hoods
IP67 metallized plastic hoods

Identification	No. of contacts	Part number
Hood		
Black thermoplastic		
	9	09 67 009 0436
	15	09 67 015 0436
	25	09 67 025 0436
Metallized thermoplastic		
	9	09 67 009 0437
	15	09 67 015 0437
	25	09 67 025 0437

Drawing

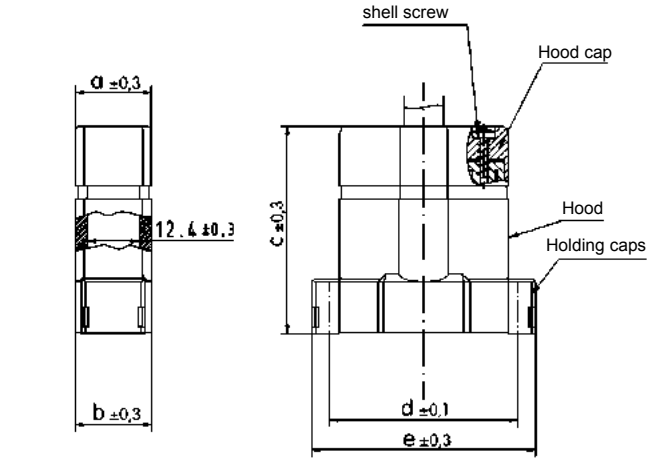

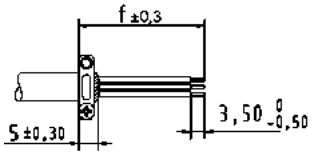

Mounting instructions

The stripped braid should not be fold back to avoid damaging the cable clamp and reducing its performance.

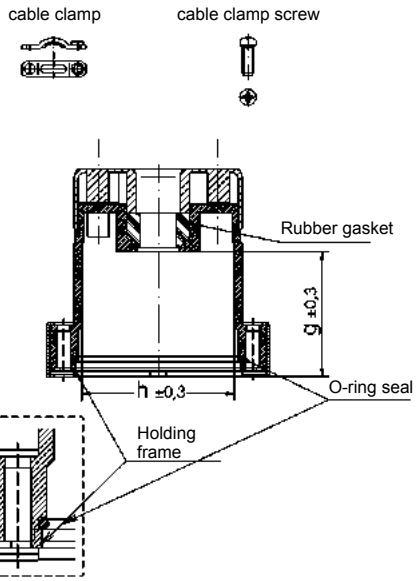

Dimensions in mm

	a	b	c	d	e	f	g	h
9	15.6	15.6	41.0	25.00	33.6	23.0	25.0	17.0
15	15.6	15.6	46.8	33.30	42.0	27.5	30.8	25.1
25	18.8	19.1	52.0	47.04	55.7	31.5	33.8	38.8

Accessories for IP67 hoods

Identification	Part number	Drawing	Dimensions in mm
Short locking screw 4-40 UNC	09 67 002 9008	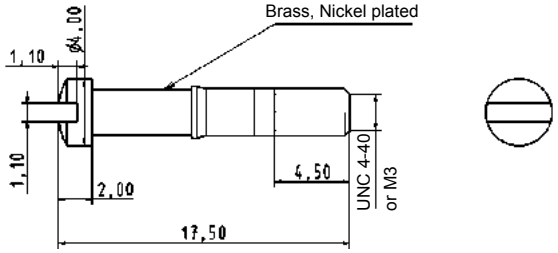	
Short locking screw M3	09 67 002 9009		
Knurled locking screw 4-40 UNC	09 67 002 9010	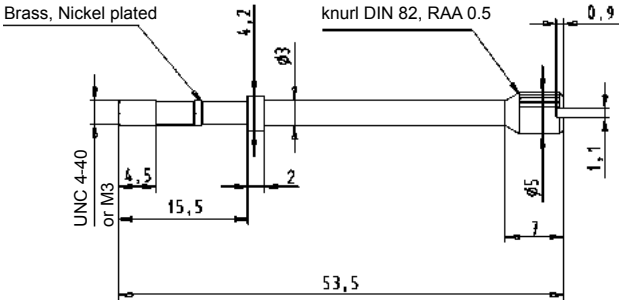	
Knurled locking screw M3	09 67 002 9011		
Knurled locking screw 4-40 UNC with plastic cap	09 67 002 9012	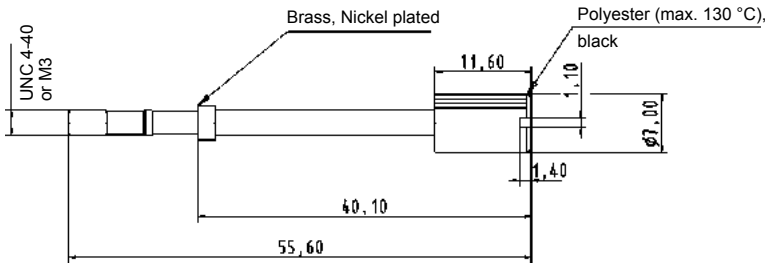	
Knurled locking screw M3 with plastic cap	09 67 002 9013		

HARTING – Guarantee a secure connection

Modern electronic applications demand a high degree of mechanical and electrical security.

To meet these requirements, continuous screening from the cable to the PCB via the connector is achieved by using state of the art components to DIN 41652.

HARTING offer many solutions. These utilise various combinations of male and female connectors with hoods, featuring either screw locking or latching facilities.

Only 2 examples are shown:

- Continuous security screening and grounding with screw locking and metallized hood.
- Continuous grounding and vibration proof latching system with metallized hood.

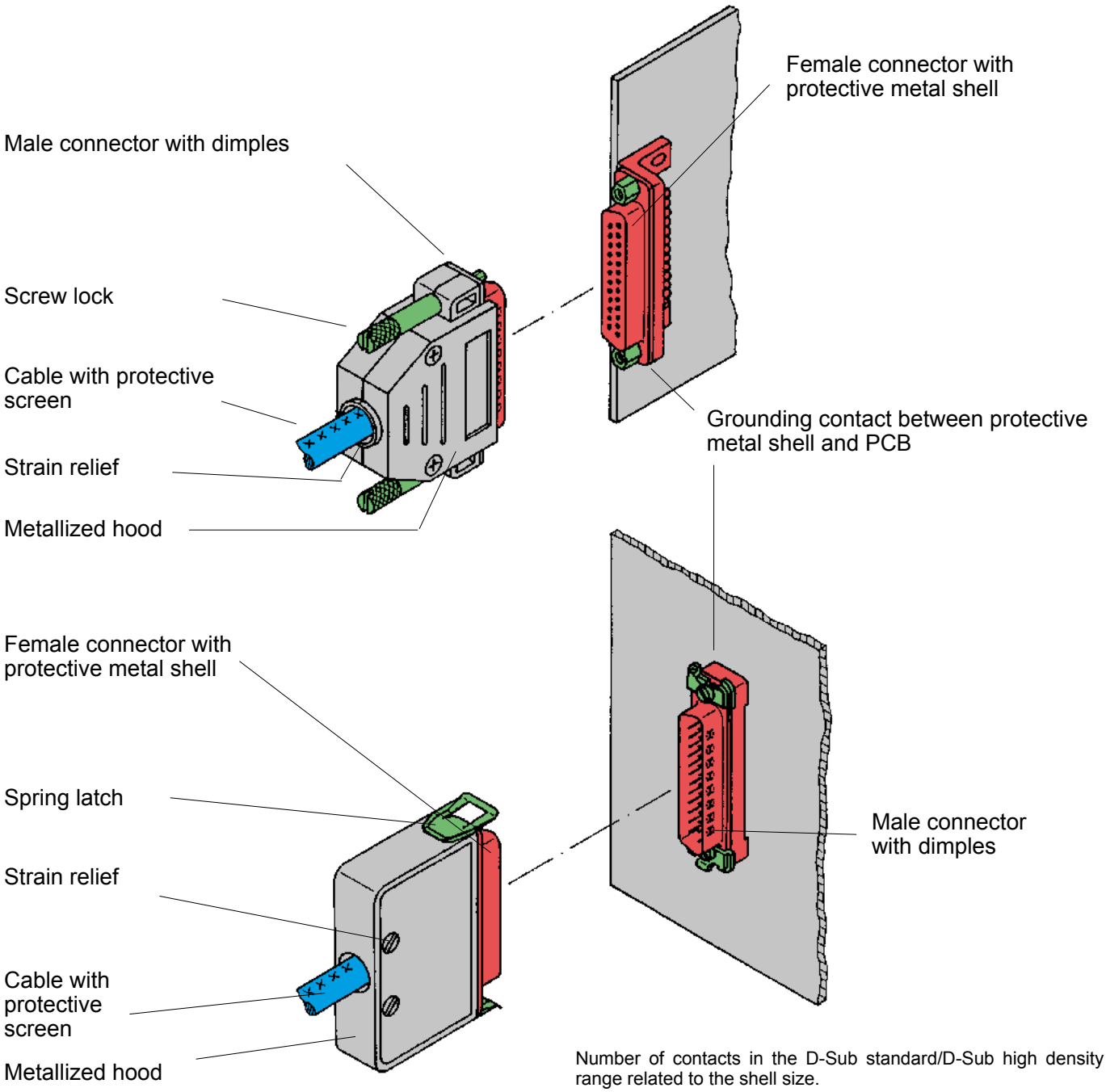

Number of contacts in the D-Sub standard/D-Sub high density range related to the shell size.

Shell size	D-Sub standard	D-Sub high density
1	9	15
2	15	26
3	25	44
4	37	62
5	50	78

Connector hoods for screw locking

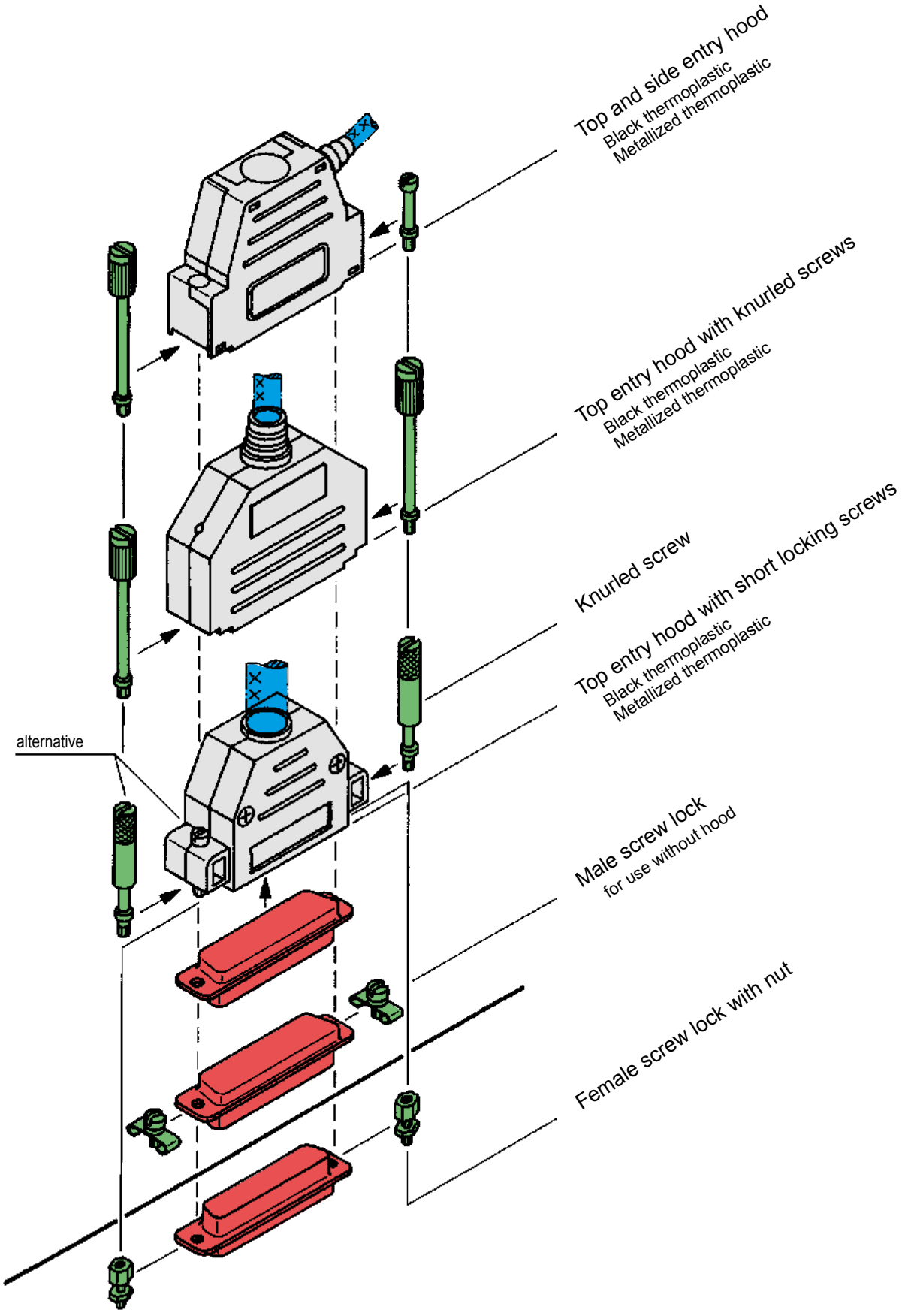

D-Sub

Top and side entry hoods with knurled screws

Identification	No. of contacts	Part number	Drawing	Dimensions in mm
Top entry hood Black thermoplastic				
	9	09 67 009 042 .		
	15	09 67 015 042 .		
Please insert digit for screw option	25	09 67 025 042 .		
	37	09 67 037 042 .		
	50	09 67 050 042 .		
Knurled screw, thread 4-40 UNC ▶ 4				
Knurled screw, ▶ 6 thread M3				
Top entry hood Metallized thermoplastic				
	9	09 67 009 042 .		
	15	09 67 015 042 .		
	25	09 67 025 042 .		
	37	09 67 037 042 .		
Please insert digit for screw option				
Knurled screw, thread 4-40 UNC ▶ 5				
Knurled screw, ▶ 7 thread M3				
Top and side entry hood Black thermoplastic				
	9[3]	09 67 009 043 .		
	15	09 67 015 043 .		
	25	09 67 025 043 .		
	37[1]	09 67 037 043 .		
Please insert digit for screw option				
Knurled screw, thread 4-40 UNC ▶ 4				
Knurled screw, ▶ 0 thread M3				
Top and side entry hood Metallized thermoplastic				
	9[3]	09 67 009 043 .		
	15	09 67 015 043 .		
	25[2]	09 67 025 043 .		
	37[1]	09 67 037 043 .		
Please insert digit for screw option				
Knurled screw, thread 4-40 UNC ▶ 5				
Knurled screw, ▶ 1 thread M3				

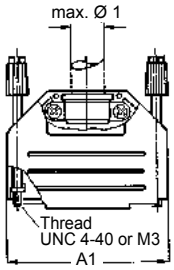

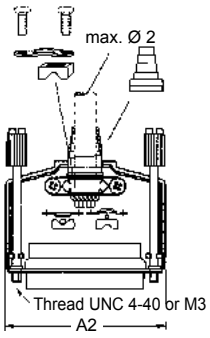

	A1	A2	B	C1	C2	max. Ø 1	max. Ø 2
9	31.5	32.5	15	34	38	8.0	11.5
15	40.0	41.0	15	34	38	11.5	11.5
25	53.5	54.5	15	40	40	11.5	11.5
37	71.0	71.0	15	40	40	11.5	11.5
50	67.5		19	40		14.0	

C1: non-metallized C2: metallized

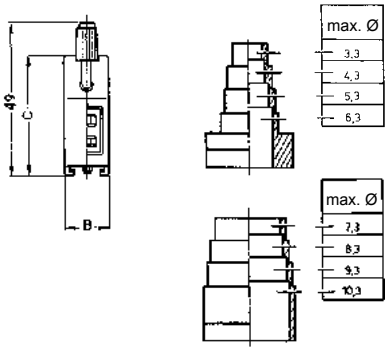

Cut appropriate cable entry to fit actual cable diameter

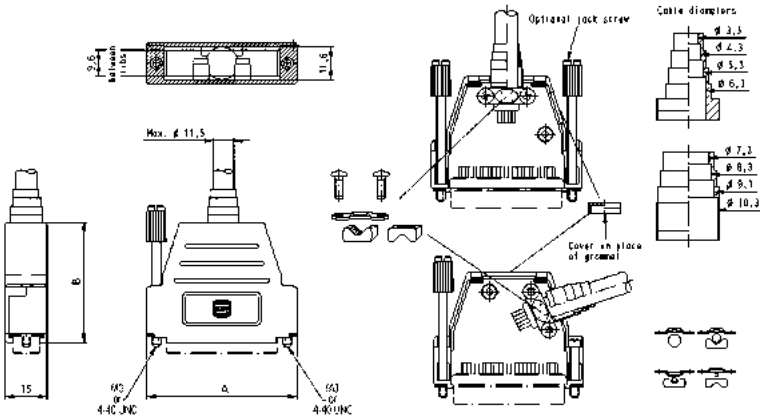

	A	B
9	31.5	40
15	40.0	40
25	53.5	43
37	71.3	40

[1] 37-pole is only available with side entry and with knurled screw, thread 4-40 UNC

[2] Cable clamp kit for two outputs is available as accessories (it includes: screw, metal clamp, plastic insert and grommet). With Part number 09 67 001 9988 ten of these kits are delivered.

[3] 9-pole hood provided with only one screw on the opposite side of the cable entry.

Operating temperature for all hoods on this page: -55 °C … +110 °C

Top and side entry hoods with short screws

Identification	No. of contacts	Part number	Drawing	Dimensions in mm
Top and side entry hood Black thermoplastic	9[1)]	09 67 009 046 .		
	15	09 67 015 046 .		
	25	09 67 025 046 .		
	37	09 67 037 046 .		
Please insert digit for screw option				
Short screw, thread 4-40 UNC ▶ 3				
Short screw, thread M3 ▶ 2				
Top and side entry hood Metallized thermoplastic	9[1)]	09 67 009 046 .		
	15	09 67 015 046 .		
	25	09 67 025 046 .		
	37	09 67 037 046 .		
Please insert digit for screw option				
Short screw, thread 4-40 UNC ▶ 5				
Short screw, thread M3 ▶ 4				

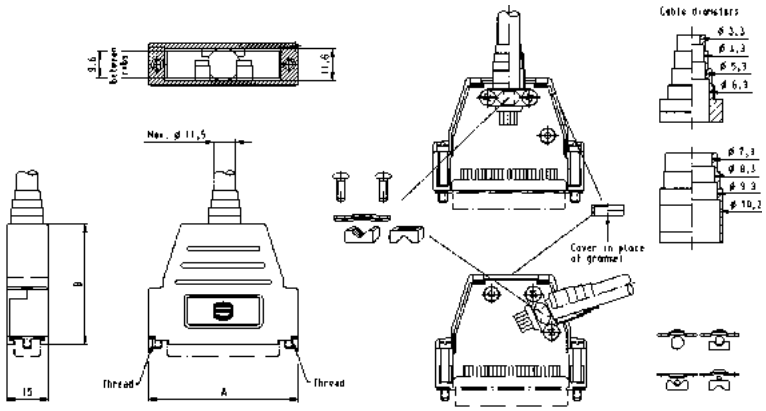

	A	B
9	31.5	40
15	40.0	40
25	53.5	43
37	71.3	40

[1)] 9-pole hood provided with only one screw on the opposite side of the cable entry.
Operating temperature for all hoods on this page: -55 °C … +110 °C

Scope of delivery and spare parts

	Knurled screw M3, beige	Knurled screw 4-40 UNC, beige	Knurled screw M3, black	Knurled screw 4-40 UNC, black	Cable clamp, small	Cable clamp, large	Cable clamp screw	Metallized insert, small
					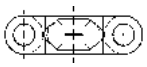	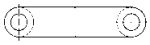	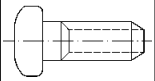	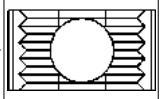
Part number	09 67 002 9152	09 67 002 9081	09 67 001 9961	09 67 002 9024	09 67 002 9104	09 67 002 9106	09 67 002 9102	09 67 002 9103
09 67 009 0424				2	1		2	
09 67 015 0424				2		1	2	
09 67 025 0424				2		1	2	
09 67 037 0424				2		1	2	
09 67 050 0424				2		1	2	
09 67 009 0426			2		1		2	
09 67 015 0426			2			1	2	
09 67 025 0426			2			1	2	
09 67 037 0426			2			1	2	
09 67 050 0426			2			1	2	
09 67 009 0425		2			1		2	1
09 67 015 0425		2				1	2	
09 67 025 0425		2				1	2	
09 67 037 0425		2				1	2	
09 67 009 0427	2				1		2	1
09 67 015 0427	2					1	2	
09 67 025 0427	2					1	2	
09 67 037 0427	2					1	2	

	Knurled screw M3, beige	Knurled screw 4-40 UNC, beige	Knurled screw M3, black	Knurled screw 4-40 UNC, black	Short screw M3, 18 mm	Short screw 4-40 UNC, 18 mm	Short screw M3, 12 mm	Short screw 4-40 UNC, 12 mm
					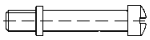	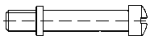	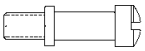	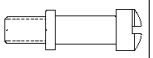
Part number	09 67 002 9152	09 67 002 9081	09 67 001 9961	09 67 002 9024	09 67 002 9163	09 67 001 9979	09 67 002 9162	09 67 002 9078
09 67 009 0434				1				
09 67 015 0434				1				1
09 67 025 0434				1		1		
09 67 037 0434								1
09 67 009 0430			1					
09 67 015 0430			1				1	
09 67 025 0430			1		1			
09 67 009 0435		1						
09 67 015 0435		1						1
09 67 025 0435		1				1		
09 67 037 0435								1
09 67 009 0431	1							
09 67 015 0431	1						1	
09 67 025 0431	1				1			
09 67 009 0463						1		
09 67 015 0463								2
09 67 025 0463						2		
09 67 037 0463								2
09 67 009 0462					1			
09 67 015 0462							2	
09 67 025 0462					2			
09 67 037 0462							2	
09 67 009 0465						1		
09 67 015 0465								2
09 67 025 0465						2		
09 67 037 0465								2
09 67 009 0464					1			
09 67 015 0464							2	
09 67 025 0464					2			
09 67 037 0464							2	

Scope of delivery and spare parts

	Metallized insert, large	Small plastic insert, black	Large plastic insert, black	Grommet kit, metallized	Grommet kit, black (optional)	Rubber grommet, small (optional)	Rubber grommet, large (optional)
	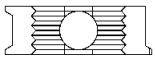	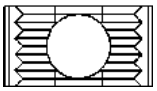	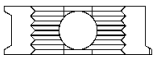	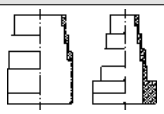	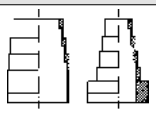	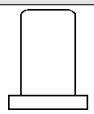	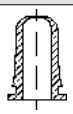
Part number	09 67 002 9105	09 67 002 9150	09 67 002 9151	09 67 002 9075	09 67 001 9968	09 67 002 9119	09 67 001 9981
09 67 009 0424		1			1	1	
09 67 015 0424			1		1		1
09 67 025 0424			1		1		1
09 67 037 0424			1		1		1
09 67 050 0424			1		1		no
09 67 009 0426		1			1	1	
09 67 015 0426			1		1		1
09 67 025 0426			1		1		1
09 67 037 0426			1		1		1
09 67 050 0426			1		1		no
09 67 009 0425							
09 67 015 0425	1			1			
09 67 025 0425	1			1			
09 67 037 0425	1			1			
09 67 009 0427							
09 67 015 0427	1			1			
09 67 025 0427	1			1			
09 67 037 0427	1			1			

	Cable clamp, small	Cable clamp screw	Metallized insert, small	Small plastic insert, black	Grommet kit, metallized	Plastic plug, metallized	Plastic plug, black
	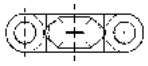	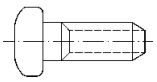	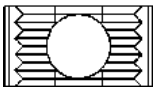	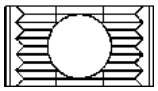	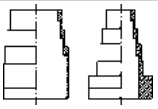		
Part number	09 67 002 9104	09 67 002 9102	09 67 002 9103	09 67 002 9150	09 67 002 9075	09 67 001 9980	09 67 002 9161
09 67 009 0434	1	2		1			1
09 67 015 0434	1	2		1			1
09 67 025 0434	1	2		1			1
09 67 037 0434	1	2		1			
09 67 009 0430	1	2		1			1
09 67 015 0430	1	2		1			1
09 67 025 0430	1	2		1			1
09 67 009 0435	1	2	1		1	1	
09 67 015 0435	1	2	1		1	1	
09 67 025 0435	1	2	1		1	1	
09 67 037 0435	1	2	1		1	N/A	
09 67 009 0431	1	2	1		1	1	
09 67 015 0431	1	2	1		1	1	
09 67 025 0431	1	2	1		1	1	
09 67 009 0463	1	2		1			1
09 67 015 0463	1	2		1			1
09 67 025 0463	1	2		1			1
09 67 037 0463	1	2		1			N/A
09 67 009 0462	1	2		1			1
09 67 015 0462	1	2		1			1
09 67 025 0462	1	2		1			1
09 67 037 0462	1	2		1			N/A
09 67 009 0465	1	2	1		1	1	
09 67 015 0465	1	2	1		1	1	
09 67 025 0465	1	2	1		1	1	
09 67 037 0465	1	2	1		1	N/A	
09 67 009 0464	1	2	1		1	1	
09 67 015 0464	1	2	1		1	1	
09 67 025 0464	1	2	1		1	1	
09 67 037 0464	1	2	1		1	N/A	

Side entry hoods with knurled screws

Identification	No. of contacts	Part number	Drawing	Dimensions in mm
Hood[1]			Upper hood part / Lower hood part	
grey thermoplastic RAL 7032	9	09 67 009 0571	9 contacts	
	15	09 67 015 0571		
	25	09 67 025 0571		
	37	09 67 037 0571		
	50	09 67 050 0571		
grey thermoplastic with internal tin-plate screening	9	09 67 009 0573	15 – 50 contacts	
	15	09 67 015 0573		
	25	09 67 025 0573		
	37	09 67 037 0573		
	50	09 67 050 0573		
9-37 way for packaging density of 3 TE (15.24 mm)				
Knurled screw				
Thread UNC Thread M3	9-50	09 67 000 9971[2] 09 67 001 9965*	Grey head / Nickel plated steel	
Thread UNC Thread M3	9-50	09 67 001 9978 09 67 001 9977	Full metal part	
Tooling for assembly of hoods				
Top part		09 99 000 0215*		
Bottom part		09 99 000 0216*		

	a max.	b min.	c	d	e	f
15	39.62	28.40	13.00	14.00	1.00	7.50
25	53.52	42.20	13.00	14.00	1.00	7.50
37	69.80	58.65	13.00	14.00	1.00	7.50
50	67.41	56.18	16.00	17.50	1.50	9.50

* Not normally kept in stock
[1] Order knurled screw separately
[2] 9 way 1 per hood – 15-50 way 2 per hood
[3] Screw driver type ISO PH 1 for philips screw No 1 ISO norm 4757
Operating temperature for all hoods on this page: -30 °C … +100 °C

Top entry hoods with knurled or locking screws

Identification	No. of contacts	Part number
Hood[3]		
Black thermoplastic with short locking screws	9	09 67 009 0442
	15	09 67 015 0442
	25	09 67 025 0442
	37	09 67 037 0442
	50	09 67 050 0442
Hood[3]		
Metallized thermo-plastic with short locking screws	9	09 67 009 04 . 3
	15	09 67 015 04 . 3
	25	09 67 025 04 . 3
	37	09 67 037 04 . 3
	50	09 67 050 04 . 3
Please insert digit for screw option		
Thread 4-40 UNC ▶ 4		
Thread M3 ▶ 2		
Knurled screw		
for metallized hood		
Thread UNC	9-50	09 67 000 9925[2]
Thread M3	9-50	09 67 000 9930[2]
Screened hood		
Order cover and internal metal screen separately		
Cover[4]		
Black thermoplastic with knurled screws	9	09 67 009 0422
	15	09 67 015 0422
	25	09 67 025 0422
	37	09 67 037 0422
Internal metal screen[4]		
metallized	9	09 67 009 0421
	15	09 67 015 0421
(Crimp tool see chapter 20)	25	09 67 025 0421
	37	09 67 037 0421

Dimensions in mm

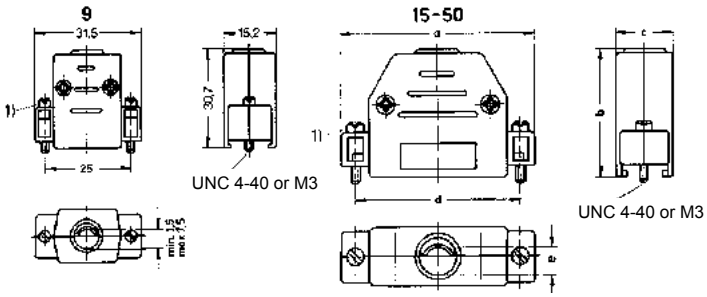

	a	b	c	d	e min.	e max.
15	40.0	34.7	15.2	33.3	3.3	8.5
25	53.2	39.7	15.2	47.0	3.5	11.0
37	70.0	39.7	15.2	63.5	3.5	11.0
50	67.5	39.7	18.2	61.1	9.3	12.0

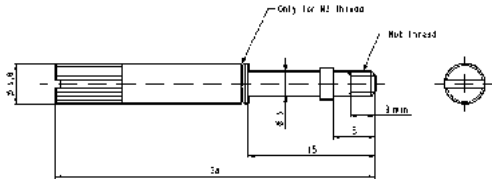

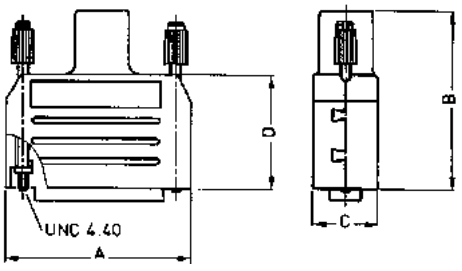

	A	B	C	D
9	35.0	54	19.1	34
15	43.0	54	19.1	34
25	57.5	54	19.1	34
37	74.0	54	19.1	34

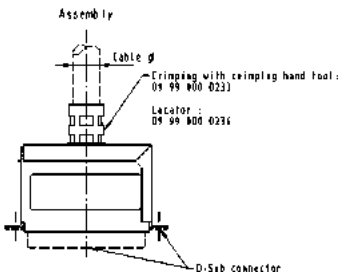

	Cable Ø (mm) min.	Cable Ø (mm) max.
9	6.1	8.8
15	6.1	8.8
25	8.0	10.3
37	9.5	11.5

[1] Use of knurled screws is possible. Please order separately
[2] Order 2 for each hood
[3] Operating temperature: -20 °C … +90 °C
[4] Operating temperature: -55 °C … +110 °C

Metallized thermoplastic top and side entry hoods with short screws

Identification	No. of contacts	Part number	Drawing	Dimensions in mm
Top entry hood Short screw, thread 4-40 UNC	9	09 67 009 0446	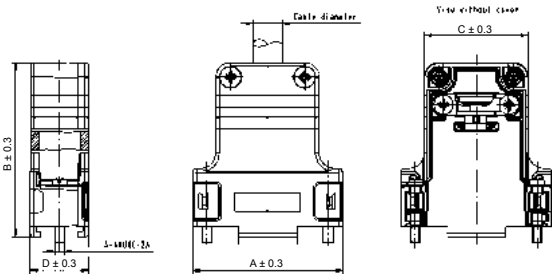	
	15	09 67 015 0446		
	25	09 67 025 0446		
	37	09 67 037 0446		
	50	09 67 050 0446		

Poles	A	B	C	D	Cable diameter	
					Min.	Max.
9	31.8	41.6	20.0	16.7	4.0	11.0
15	41.2	47.8	28.4	16.2	4.0	11.0
25	54.9	54.8	42.1	16.2	4.0	12.0
37	71.4	57.8	58.6	18.9	6.0	13.0
50	69.0	57.8	56.2	19.5	6.0	14.0

Side entry hood Short screw, thread 4-40 UNC	9	09 67 009 0448	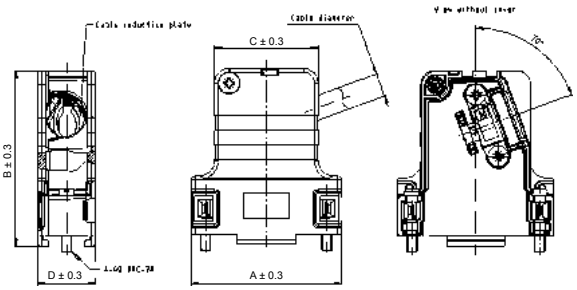	
	15	09 67 015 0448		
	25	09 67 025 0448		
	37	09 67 037 0448		
	50	09 67 050 0448		

Full metal top and side entry hoods with knurled screws

Top entry hood incl. grommet set halves

Identification	No. of contacts	Part number
Please insert digit for screw option	9	09 67 009 034 .
	15	09 67 015 034 .
	25	09 67 025 034 .
	37	09 67 037 034 .
	50	09 67 050 034 .
Knurled screw, thread 4-40 UNC ▶ 3		
Knurled screw, thread M3 ▶ 8		
Spare knurled screw thread 4-40 UNC		09 67 002 9029
thread M3		09 67 002 9101

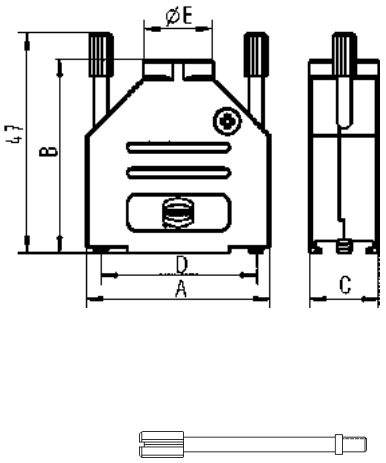

Poles	A	B	C	D	E
9	31.0	39.5	14.8	25.0	11.7
15	39.5	41.5	14.8	33.3	11.7
25	53.5	48.5	14.8	47.0	11.7
37	71.0	53.0	14.8	63.5	11.7
50	67.5	54.0	18.7	61.1	17.0

Side entry hood incl. grommet set halves

Identification	No. of contacts	Part number
Please insert digit for screw option	9[1]	09 67 009 033 .
	15	09 67 015 033 .
	25	09 67 025 033 .
	37	09 67 037 033 .
	50	09 67 050 033 .
Knurled screw, thread 4-40 UNC ▶ 3		
Knurled screw, thread M3 ▶ 6		
Spare knurled screw thread 4-40 UNC		09 67 002 9028
thread M3		09 67 001 9997

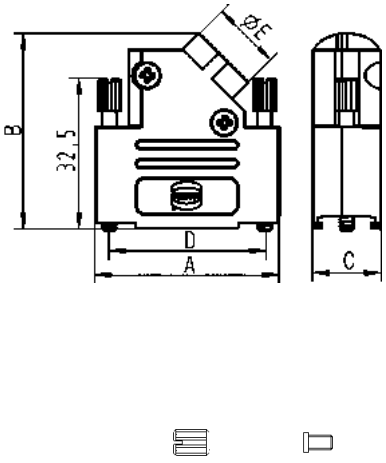

Poles	A	B	C	D	E
9	31.0	37.7	14.7	–	11.7
15	39.5	42.0	14.7	33.3	11.7
25	53.2	41.3	14.7	47.0	11.7
37	69.7	41.8	14.7	63.7	11.7
50	67.4	44.9	17.4	61.1	17.0

Spare grommet set halves

9-37 poles		09 67 002 9092
50 poles		09 67 002 9094

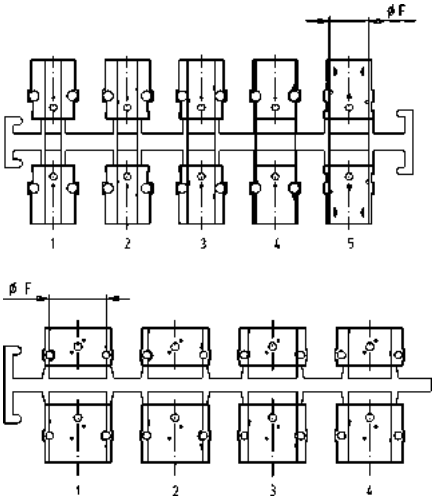

Grommet dimensions		
Number	Diameter F	
	9-37 poles	50 poles
1	4.0	15.0
2	5.0	14.0
3	7.0	12.5
4	9.0	11.0
5	10.2	–

[1] 9-pole hood provided with only one screw on the opposite side of the cable entry.
Operating temperature for all hoods on this page: -40 °C … +120 °C

Full metal top and side entry hoods with short screws

Identification	No. of contacts	Part number	Drawing	Dimensions in mm
Top entry hood				
	9	09 67 009 034 .		
	15	09 67 015 034 .		
	25	09 67 025 034 .		
	37	09 67 037 034 .		
	50	09 67 050 034 .		
Please insert digit for screw option				
Locking screw, thread 4-40 UNC ▶ 4				
Locking screw, thread M3 ▶ 9				
Side entry hood				
	9	09 67 009 033 .		
	15	09 67 015 033 .		
	25	09 67 025 033 .		
	37	09 67 037 033 .		
	50	09 67 050 033 .		
Please insert digit for screw option				
Locking screw, thread 4-40 UNC ▶ 4				
Locking screw, thread M3 ▶ 5				
Spare short locking screw				
thread 4-40 UNC		09 67 002 9090		
thread M3		09 67 002 9091		

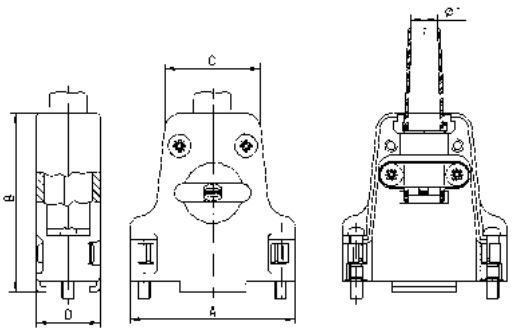

Poles	A	B	C	D	Ø F1		Ø F2	Ø F3
					Min.	Max.		
9	31.8	42.4	20.8	15.4	3.0	9.5	6.5	–
15	40.3	43.5	23.3	15.4	3.0	8.5	6.5	12.5
25	54.0	47.7	31.7	15.4	3.0	8.5	8.0	12.5
37	70.2	50.4	48.2	18.4	3.0	12.0	9.0	15.0
50	67.8	50.5	45.8	18.2	3.0	12.0	9.7	15.0

* Cable diameter without rubber bushing = Ø F1
Cable diameter with rubber bushing = Ø F2
Cable diameter without rubber bushing and without cable reduction plate = Ø F3

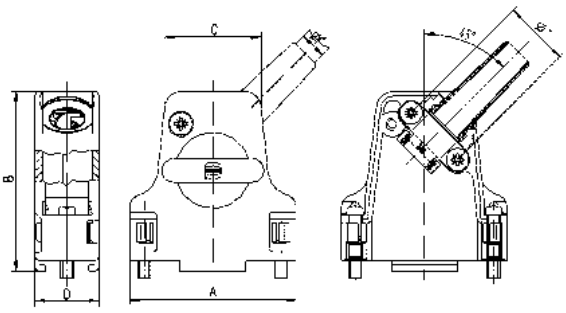

Operating temperature for all hoods on this page: -35 °C … +100 °C

Full metal top and side entry hoods with hexagonal screws

Identification	No. of contacts	Part number
Top entry hood		
	9	09 67 009 032 .
	15	09 67 015 032 .
	25	09 67 025 032 .
	37	09 67 037 032 .
	50	09 67 050 032 .
Please insert digit for screw option		
Hexagonal screw, thread 4-40 UNC ▶ 0		
Hexagonal screw, thread M3 ▶ 1		
Side entry hood		
	9	09 67 009 033 .
	15	09 67 015 033 .
	25	09 67 025 033 .
	37	09 67 037 033 .
	50	09 67 050 033 .
Please insert digit for screw option		
Hexagonal screw, thread 4-40 UNC ▶ 8		
Hexagonal screw, thread M3 ▶ 9		

Drawing

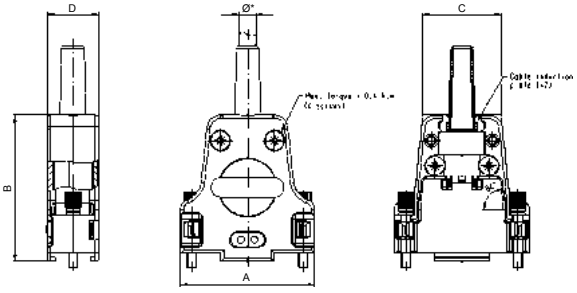

Dimensions in mm

Poles	A	B	C	D	Ø F1 Min.	Ø F1 Max.	Ø F2	Ø F3
9	31.6	42.0	20.8	15.2	3.0	9.5	6.5	–
15	40.0	43.5	23.3	15.2	3.0	8.5	6.5	12.5
25	53.7	47.5	31.7	15.2	3.0	8.5	8.0	12.5
37	70.2	50.5	48.2	18.2	3.0	12.0	9.0	15.0
50	67.8	50.5	45.8	18.2	3.0	12.0	9.7	15.0

* Cable diameter without rubber bushing = Ø F1
Cable diameter with rubber bushing = Ø F2
Cable diameter without rubber bushing and without cable reduction plate = Ø F3

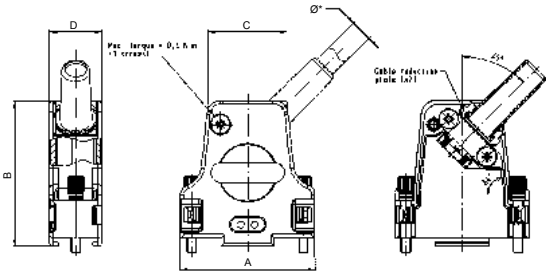

Full metal top entry hoods with premounted threaded inserts

Identification	No. of contacts	Part number
Top entry hood		
	9	09 67 009 032 .
	15	09 67 015 032 .
	25	09 67 025 032 .
	37	09 67 037 032 .
	50	09 67 050 032 .
Please insert digit for premounted insert		
thread 4-40 UNC ▶ 2		
thread M3 ▶ 3		
Locking hook		09 67 002 9031[1]
Latch lock bolt		
Front mount		
thread 4-40 UNC		09 67 002 9041[1]
thread M3		09 67 002 9042[1]
Rear mount		
thread 4-40 UNC		09 67 002 9032[1]
thread M3		09 67 002 9040[1]
Cable to cable		
thread 4-40 UNC		09 67 002 9044[1]
thread M3		09 67 002 9045[1]

Drawing

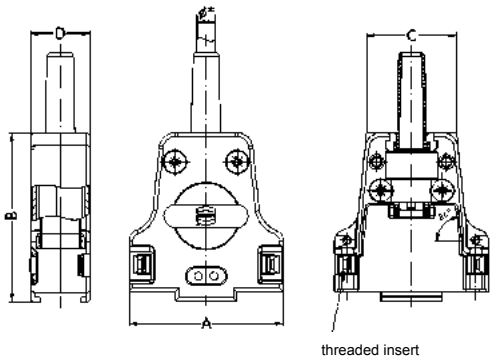

Dimensions in mm

Poles	A	B	C	D	Ø F1		Ø F2	Ø F3
					Min.	Max.		
9	31.6	42.0	20.8	15.2	3.0	9.5	6.5	–
15	40.0	43.5	23.3	15.2	3.0	8.5	6.5	12.5
25	53.7	47.5	31.7	15.2	3.0	8.5	8.0	12.5
37	70.2	50.5	48.2	18.2	3.0	12.0	9.0	15.0
50	67.8	50.5	45.8	18.2	3.0	12.0	9.7	15.0

* Cable diameter without rubber bushing = Ø F1
Cable diameter with rubber bushing = Ø F2
Cable diameter without rubber bushing and without cable reduction plate = Ø F3

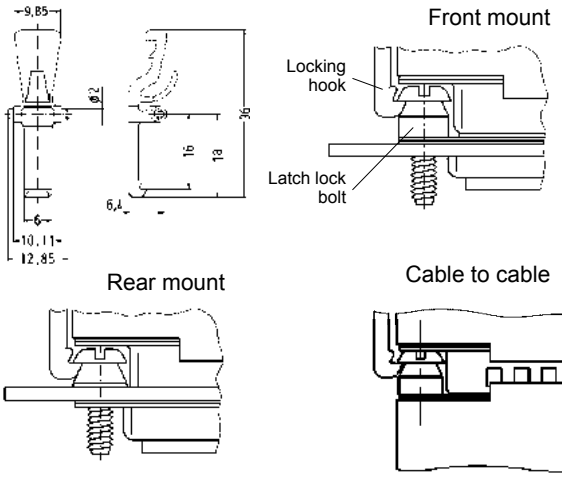

[1] Order 2 for each hood
Operating temperature for all hoods on this page: -35 °C … +100 °C

Full metal top and side entry hoods with different screw options

Identification	No. of contacts	Part number	Drawing	Dimensions in mm
40° side entry hood				
with internal grounding block				
	9	61 03 001 . 013		
	15	61 03 001 . 014		
	25	61 03 001 . 015		
without internal grounding block	9	61 03 001 . 013 010		

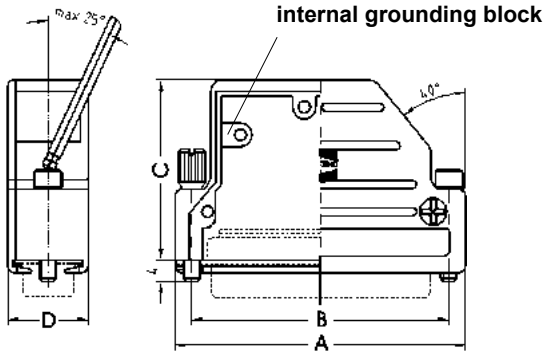

No. of contacts	A	B	C	D
9	31.0	25.0	35.0	15.0
15	39.3	33.3	35.0	15.0
25	53.0	47.0	35.0	15.0

Identification	No. of contacts	Part number	Drawing	Dimensions in mm
Top/side entry hood				
with internal grounding block				
	9	61 03 001 . 010		
	15	61 03 001 . 016		
	25	61 03 001 . 017[1)]		
	37	61 03 001 . 018[1)]		
	50	61 03 001 . 019[1)]		
without internal grounding block	9	61 03 001 . 010 010		

Please insert digit for screw option

Knurled screw, thread 4-40 UNC ▶	0
Hexagonal screw, thread M3 with captive washer ▶	1
Hexagonal screw, thread 4-40 UNC with captive washer ▶	2
Knurled screw, thread M3 ▶	3

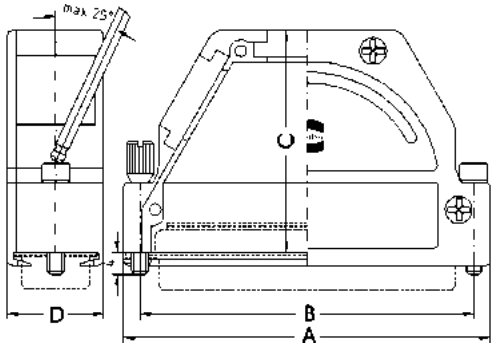

No. of contacts	No. of cable entries	A	B	C	D
9	1 (top)	31.0	25.0	38.0	15.0
15	1 (top)	39.5	33.3	35.0	15.0
25	3	53.0	47.0	43.0	15.0
37	3	69.5	63.5	43.0	15.0
50	3	67.2	61.6	43.0	17.8

[1)] Part number contains two blanking pieces
Operating temperature for all hoods on this page: -20 °C … +90 °C

Accessories see page 05.162

Full metal top and side entry hoods with different screw options

Identification	No. of contacts	Part number	Drawing	Dimensions in mm
5° top entry hood with 3 cable entries				
with internal grounding block	37	61 03 001 . 118		
	50	61 03 001 . 119		
without internal grounding block	37	61 03 001 . 118 010		
	50	61 03 001 . 119 010		

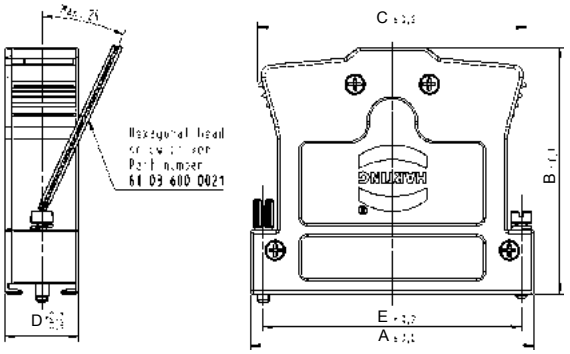

No. of contacts	A	B	C	D	E
37	69.5	52.0	58.2	14.8	63.5
50	67.1	58.0	63.6	17.6	61.1

Please insert digit for screw option

Knurled screw, thread 4-40 UNC ▶	0
Hexagonal screw, thread M3 ▶ with captive washer	1
Hexagonal screw, thread 4-40 UNC ▶ with captive washer	2
Knurled screw, thread M3 ▶	3

Top entry hood for InduCom 9				
Hexagonal screw, thread 4-40 UNC	9	66 67 009 0346	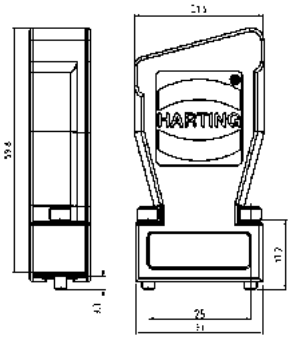	2 cable entries
Hexagonal screw, thread M3	9	66 67 009 0347		

Notes

Connector hoods for spring or slide locking

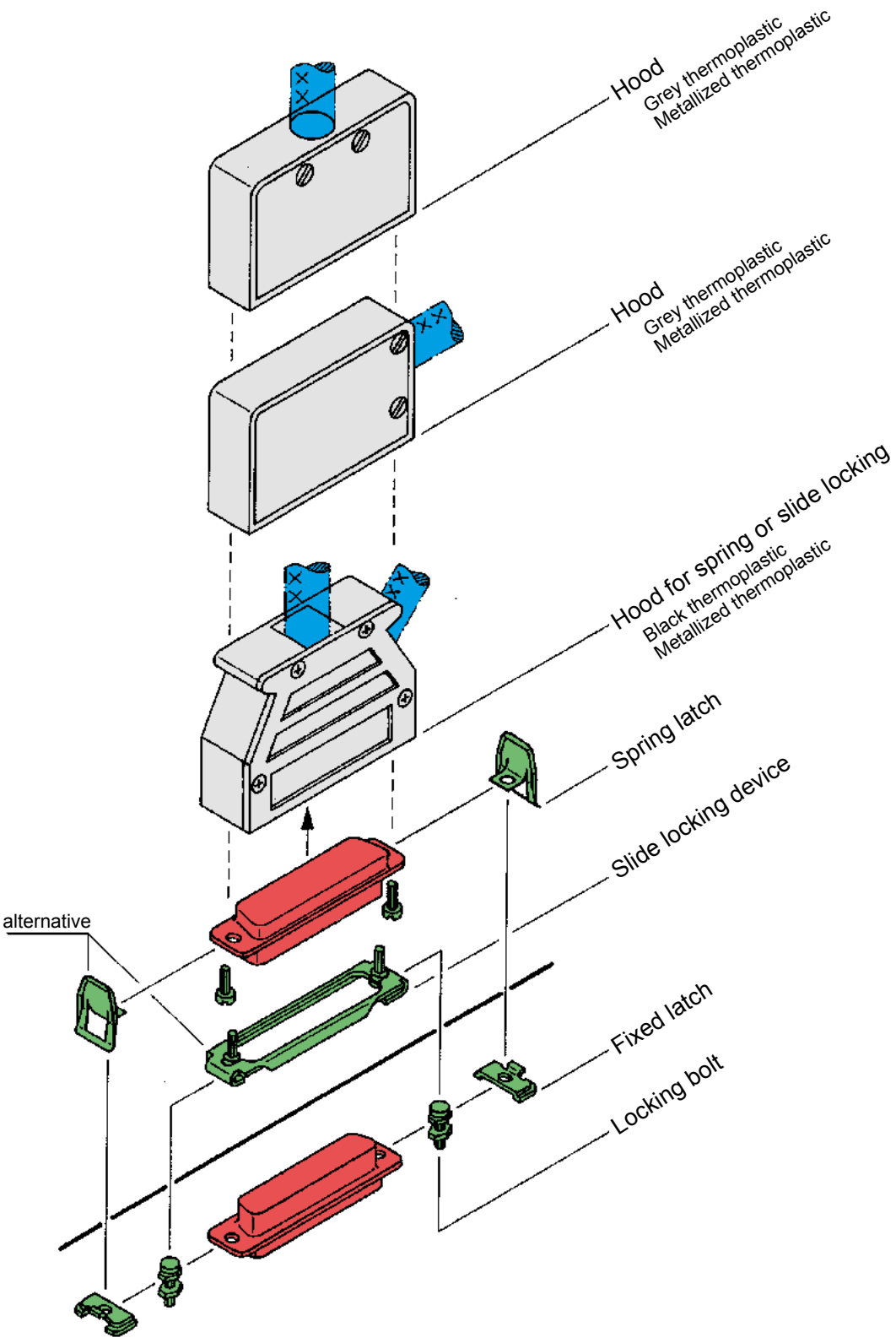

Thermoplastic top and side entry hoods for spring or slide locking

Identification	No. of contacts	Part number		Drawing	Dimensions in mm
Top entry hood		Thermoplastic grey[2]	Thermoplastic metallized[3]		
9-37 way for packaging density of 3 TE (15.24 mm)	9	09 67 009 0411	09 67 009 0413		
	15	09 67 015 0411	09 67 015 0413		
	25	09 67 025 0411	09 67 025 0413		
	37	09 67 037 0411	09 67 037 0413		
	50	09 67 050 0411	09 67 050 0413		

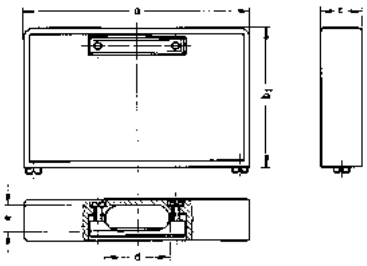

	a	b_1	b_2	c	d	e min.	e max.
9	31.0	23	28	12.8	10	5.75	9.0
15	39.4	28	28	12.8	10	5.75	9.0
25	53.3	34	34	12.8	14	5.75	9.0
37	69.7	43	43	12.8	20	5.75	9.0
50	67.1	41	41	15.8	20	5.75	11.6

Side entry hood		Thermoplastic grey[2]	Thermoplastic metallized[3]		
9-37 way for packaging density of 3 TE (15.24 mm)	9	09 67 009 0511	09 67 009 0513		
	15	09 67 015 0511	09 67 015 0513		
	25	09 67 025 0511	09 67 025 0513		
	37	09 67 037 0511	09 67 037 0513		
	50	09 67 050 0511	09 67 050 0513		

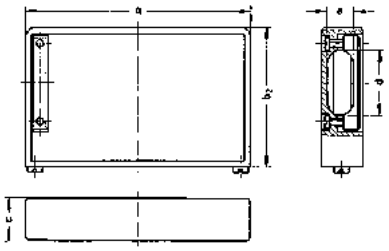

Top and side entry hood [1]		Thermoplastic black[4]	Thermoplastic metallized[4]		
[1] 9-poles is only side entry	9	09 67 009 0452	09 67 009 0453		
	15	09 67 015 0452	09 67 015 0453		
	25	09 67 025 0452	09 67 025 0453		
	37	09 67 037 0452	09 67 037 0453		
	50	09 67 050 0452	09 67 050 0453		

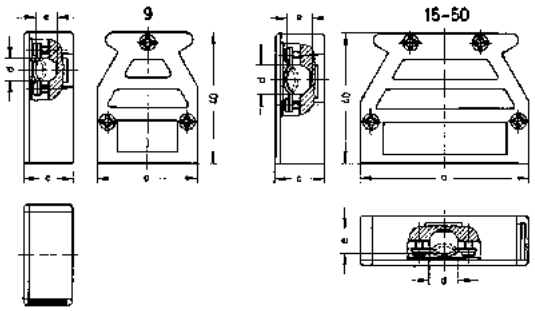

	a	c	d	e min.	e max.
9	31.0	15.4	7	1.7	7.5
15	39.4	15.4	7	1.7	8.0
25	53.2	15.4	9	1.5	8.0
37	69.5	15.4	9	1.5	8.0
50	67.0	17.9	9	1.5	8.0

[2] Operating temperature: -55 °C … +120 °C
[3] Operating temperature: -35 °C … +60 °C
[4] Operating temperature: -20 °C … +90 °C

Accessories see page 05.159

Full metal top and side entry hoods for spring or slide locking

Identification	No. of contacts	Part number
Top/side entry hood with spring/slide locking	9	61 03 001 0022[1)]
	15	61 03 001 0011[2)]
	25	61 03 001 0012[2)]
	37	61 03 001 0021[2)]
	50	61 03 001 0020[2)]

Drawing

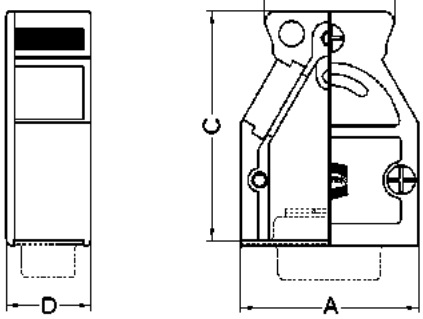

Dimensions in mm

No. of contacts	No. of cable entries	A	B	C	D
9	2	31.0	22.6	40.0	14.8
15	3	39.0	30.6	40.0	14.8
25	3	53.0	42.6	40.0	14.8
37	3	69.5	59.2	40.0	14.8
50	3	67.0	55.0	40.0	17.6

[1)] Part number contains one blanking piece
[2)] Part number contains two blanking pieces

Accessories see page 05.162

Accessories for spring or slide locking hoods

Identification	No. of contacts	Part number	Drawing	Dimensions in mm
Spring latch	9-50	corrosion resistant steel 09 67 000 9907[1)]	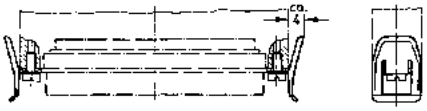	
Fixed latch[2)]	9-37 50	corrosion resistant steel 09 67 001 9971[1)] 09 67 001 9972[1)]	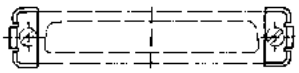	
Slide locking device	9 15 25 37 50	corrosion resistant steel 09 67 000 9914 09 67 000 9915 09 67 000 9916 09 67 000 9917 09 67 000 9918	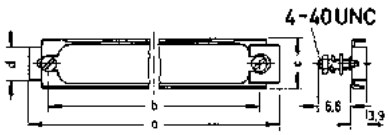	
Locking bolt	9-50	tinned 09 67 001 9973[1)]		

	a	b	c	d
9	35.0	25.0	11.7	8.6
15	43.3	33.3	11.5	8.6
25	57.0	47.0	11.7	8.6
37	74.3	63.5	11.7	8.6
50	72.0	61.1	14.7	11.2

[1)] Order 2 for each connector
[2)] Screws are not supplied with a fixed latch

Coding system

Example of application

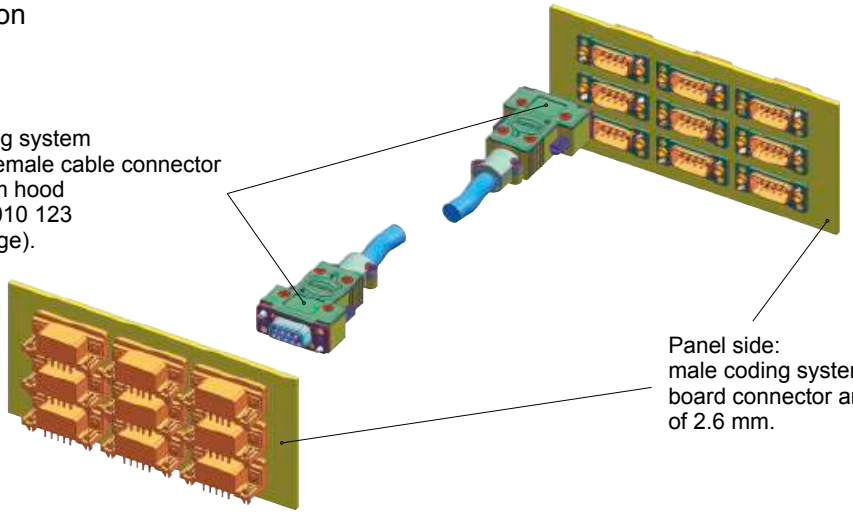

Exploded view panel side

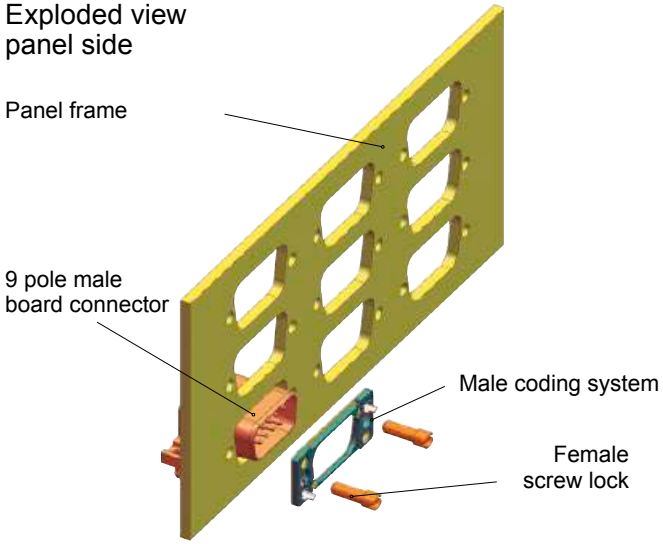

Exploded view cable side

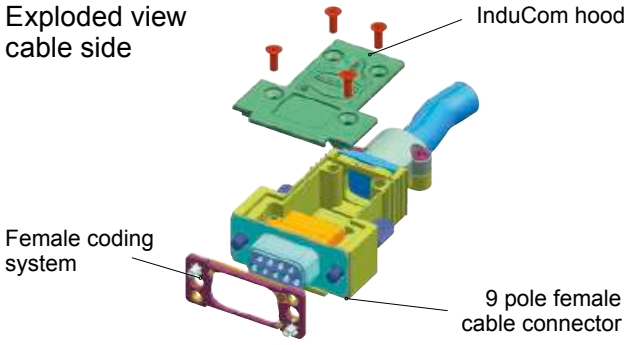

Coding key details

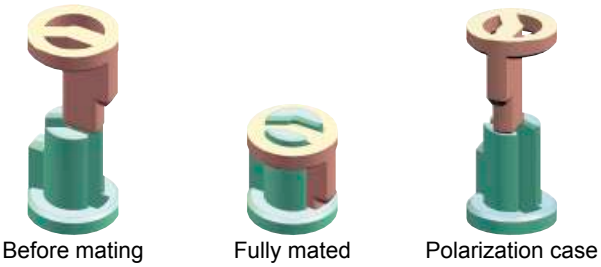

Standard coding combinations

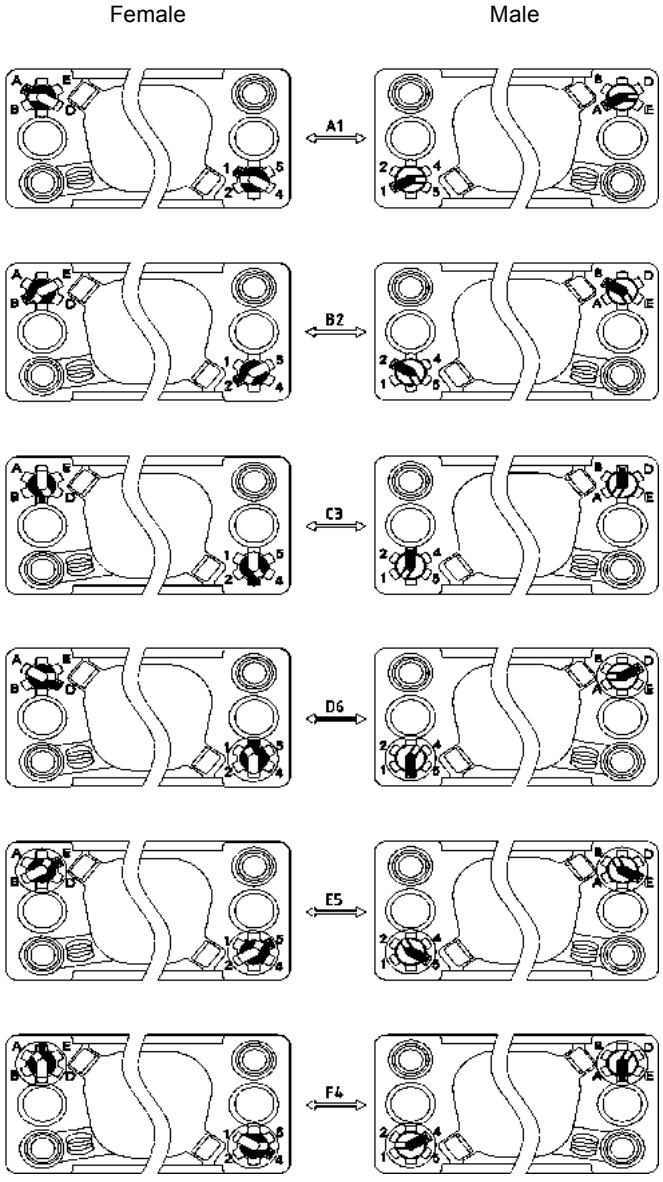

Accessories – coding system

Identification	Part number	Panel thickness	Dimensions in mm
Coding[1]			
Female	09 67 002 9121 xx 1	2.40 - 2.60 mm[3]	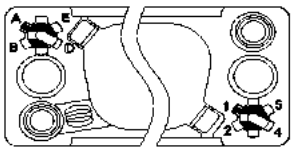
	09 67 002 9121 xx 2	2.00 - 2.40 mm	
	09 67 002 9121 xx 3	1.20 - 2.00 mm	
	09 67 002 9121 xx 4	0.80 - 1.20 mm	
Male	09 67 002 9122 xx 1	2.40 - 2.60 mm[3]	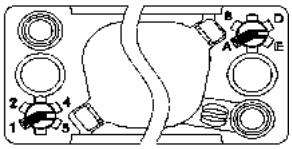
	09 67 002 9122 xx 2	2.00 - 2.40 mm	
	09 67 002 9122 xx 3	1.20 - 2.00 mm	
	09 67 002 9122 xx 4	0.80 - 1.20 mm	
Insert digits for coding configuration, e. g. "C3"		36 coding configurations[2]	

A1	B1	C1	D1	E1	F1
A2	**B2**	C2	D2	E2	F2
A3	B3	**C3**	D3	E3	F3
A4	B4	C4	D4	E4	**F4**
A5	B5	C5	D5	**E5**	F5
A6	B6	C6	**D6**	E6	F6

Depending on the panel thickness the suitable coding needs to be selected.

Female screw lock

for angled PCB connectors[3]

Thread inner	Thread outer	Part number	Panel thickness
4 - 40 UNC	4 - 40 UNC	09 67 002 9123[4]	2.00 - 2.60 mm
4 - 40 UNC	M3	09 67 002 9124	
M3	4 - 40 UNC	09 67 002 9125	
M3	M3	09 67 002 9126	
4 - 40 UNC	4 - 40 UNC	09 67 002 9129	1.20 - 2.00 mm
4 - 40 UNC	M3	09 67 002 9130	
M3	4 - 40 UNC	09 67 002 9131	
M3	M3	09 67 002 9132	
4 - 40 UNC	4 - 40 UNC	09 67 002 9133	0.80 - 1.20 mm
4 - 40 UNC	M3	09 67 002 9134	
M3	4 - 40 UNC	09 67 002 9135	
M3	M3	09 67 002 9136	

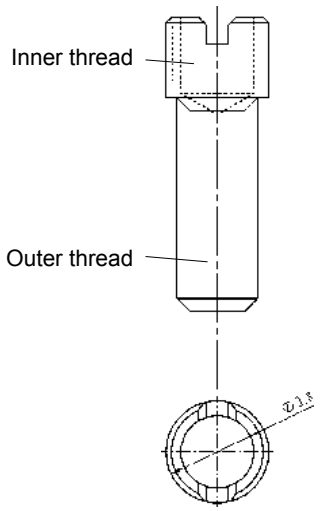

9 pole InduCom top entry hood for coding

61 03 001 . 010 123

Please insert digit for screw option

Hexagonal screw, thread M3 ▶ with captive washer	1
Hexagonal screw, thread 4-40 UNC ▶ with captive washer	2

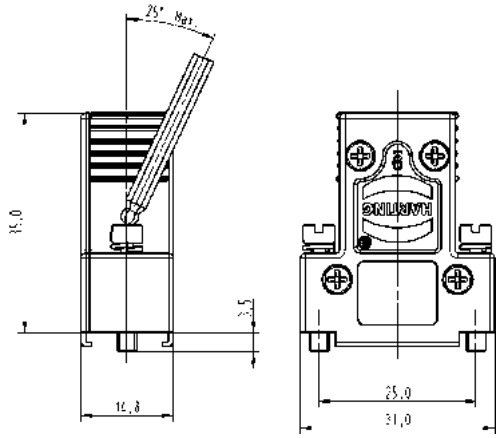

[1] MOQ = 50 pieces
[2] Stock items (standard versions) in bold type
[3] Female screw lock for straight PCB connectors on request
[4] Standard versions

Accessories for full metal hoods

Identification	Part number for 9-37-pole D-Sub	Part number for 50-pole D-Sub	Drawing / Dimensions in mm
Cable clamp			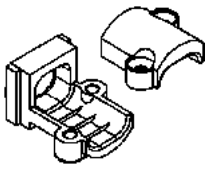
Cable-Ø appr. 5- 7 mm	61 03 000 0141		
Cable-Ø appr. 7-10 mm	61 03 000 0044		
Cable-Ø appr. 9-12 mm	61 03 000 0143		
Cable-Ø appr. 11-14 mm	61 03 000 0148	61 03 000 0145	
Cable-Ø appr. 14-16 mm		61 03 000 0147	
Crimp flange	61 03 000 0062 61 03 000 0063 61 03 000 0064 61 03 000 0065 61 03 000 0066 61 03 000 0166 61 03 000 0067 61 03 000 0068 61 03 000 0069 61 03 000 0070 61 03 000 0071 61 03 000 0165 61 03 000 0072	61 03 000 5062 61 03 000 5063 61 03 000 5064 61 03 000 5065 61 03 000 5066 61 03 000 5166 61 03 000 5067 61 03 000 5068 61 03 000 5069 61 03 000 5070 61 03 000 5071 61 03 000 5165 61 03 000 5072	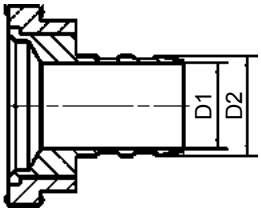

D1	D2
3.0	4.0
3.5	4.5
4.0	5.0
4.5	5.5
5.0	6.0
5.5	6.5
6.0	7.0
6.5	7.5
7.0	8.0
7.5	8.5
8.0	9.0
8.5	9.5
9.0	10.0

Crimp ferrule	61 03 000 0045 61 03 000 0046 61 03 000 0047 61 03 000 0048 61 03 000 0049 61 03 000 0050 61 03 000 0051 61 03 000 0052 61 03 000 0053 61 03 000 0054 61 03 000 0055 61 03 000 0056 61 03 000 0057 61 03 000 0058 61 03 000 0142 61 03 000 0059 61 03 000 0127 61 03 000 0060 61 03 000 0061	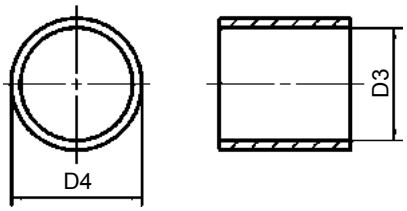

D3	D4
5.0	6.0
5.5	6.5
6.0	7.0
6.5	7.5
7.0	8.0
7.5	8.5
8.0	9.0
8.5	9.5
9.0	10.0
9.5	10.5
10.0	11.0
10.5	11.5
11.0	12.0
11.5	12.5
12.0	13.0
12.5	13.5
13.0	14.0
13.7	15.0
14.0	15.0

Blanking piece for hoods	61 03 000 0042	61 03 000 0041	
Hexagonal screw thread 4-40 UNC x 17.5-8.8 with captive washer	09 67 002 9020		
thread M3 x 17.5-8.8 with captive washer	09 67 002 9019		
Knurled screw thread 4-40 UNC	09 67 002 9018		
thread M3	09 67 002 9017		

Tooling see chapter 20
Operating temperature for all components on this page: -20 °C … +90 °C

Crimp flange termination instruction

1. Strip the cable sheath to the correct length (approx. 35 to 40 mm, depending on interface type).

2. Place the crimp ferrule over the cable sheath. Bend the outer screen backwards over the cable sheath. Cut screen approx. 2 mm from the end of the cable sheath.

3. Place the crimp flange over the wires covered by the remaining foil shield. Push and twist the crimp flange under the outer screen and cable sheath until the end of the cable sheath touches the crimp flange. HARTING has developed a special tool for optimised installation of the shielding over the crimp flange, part number 61 03 600 0017.

4. Move the crimp ferrule back onto the crimp flange and crimp the two parts together with the special service crimp tool part number 61 03 600 0020. For an optimised crimp process the tool should to be positioned as close as possible to the crimp flange sholder.

5. Cut off the internal screen foil and push the crimp flange inside the metal hood.

HARTING offers to test and define the best crimp flange and ferrule combination for customer specific cables.

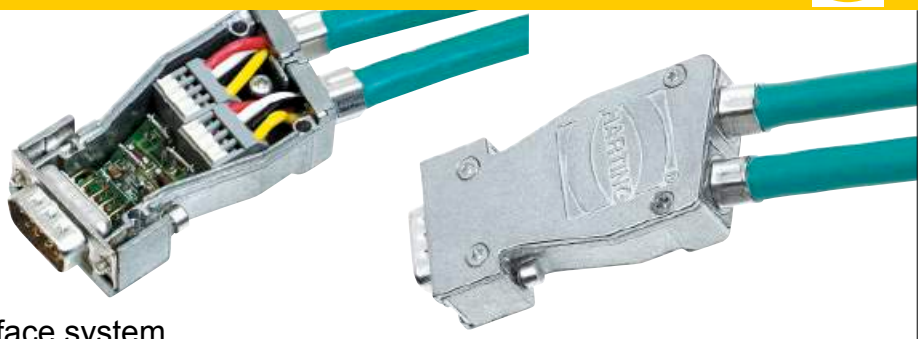

InduCom 9 – Industrial bus interface system

Identification	Part number	General information
MVB Interface 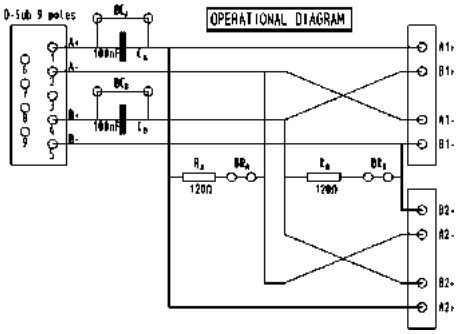	66 63 009 5013	**MVB backbone interface set** The Multifunctional Vehicle Bus (MVB) backbone interface is specially designed for communication cables in Train Control Networks (TCN). With this interface it is possible to realise a T-bus structure with MVB-cable with which you can disconnect the bus interface from the control unit without any interruption of the complete bus communication. On the PCB you will have load resistors and test capacitors which can be activated with solder bridges. The wires are terminated with the proven vibration resistant cage clamp technology.* **Components of the MVB interface set:** • 1 metal housing with 2 cable entries • 2 hexagonal screws with UNC 4-40 threads • 1 PCB with 9 way D-Sub male connector and cage clamps • 2 crimp flanges for the MVB cable • 2 crimp ferrules for the MVB cable • 1 blanking piece
WTB Interface 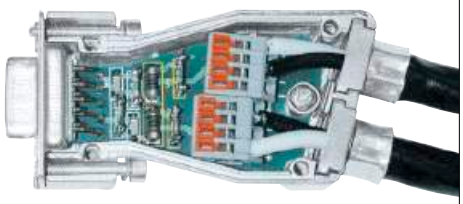 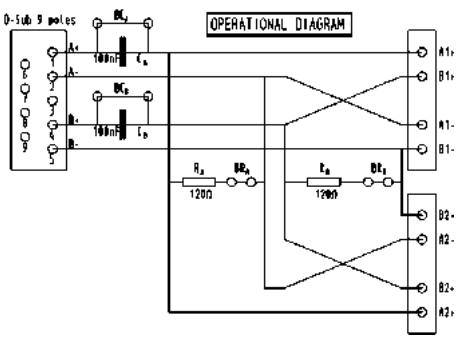	66 63 009 5014	**WTB backbone interface set** The Wired Train Bus (WTB) backbone interface is specially designed for backbone cables in Train Control Networks (TCN). With this interface it is possible to realise a T-bus structure with WTB-cable with which you can disconnect the bus interface from the control unit without any interruption of the complete bus communication. On the PCB you will have load resistors and test capacitors which can be activated with solder bridges. The wires are terminated with the proven vibration resistant cage clamp technology.* **Components of the MVB interface set:** • 1 metal housing with 2 cable entries • 2 hexagonal screws with UNC 4-40 threads • 1 PCB with 9 way D-Sub male connector and cage clamps • 2 crimp flanges for the WTB cable • 2 crimp ferrules for the WTB cable • 1 blanking piece

Further bus PCBs on request

* To check compatibility with cable types and manufacturers, please contact your local HARTING representative.

InduCom 9 – Industrial bus interface system

Identification	Part number	General information
CAN Interface 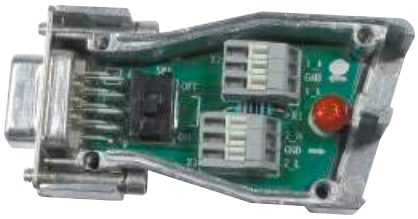 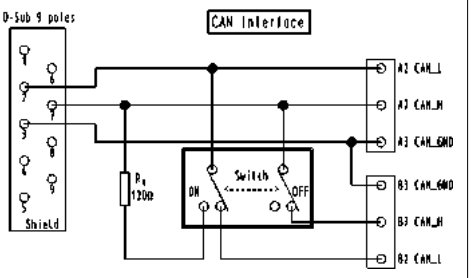	66 63 009 6016	The Controller Area Network (CAN)-Interface is specially designed for usage in trains. With this interface it is possible to realise a T-bus structure with which you can disconnect the bus interface from the control unit without any interruption of the complete bus communication. On the PCB you will have a load resistor which can be activated with the switch.* **Components of the interface set:** • 1 metal housing with 2 cable entries • 2 hexagonal screws with UNC 4-40 threads • 1 PCB with 9 way D-Sub female connector and 2 cage clamps • 1 blanking piece • 2 crimp flanges • 2 crimp ferrules
Profibus Interface 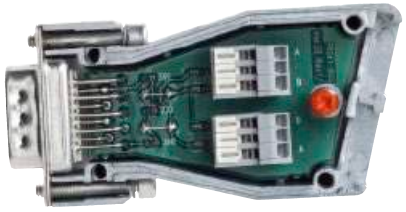 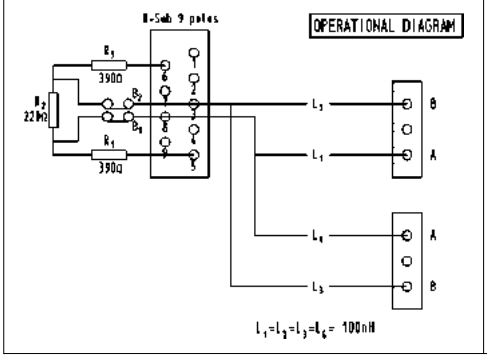	66 63 009 6004	The Profibus Interface is specially designed for usage in trains and in challenging engineering applications. On the PCB you will have SMD parts which can be activated with solder bridges. The wires are assembled with the proven vibration resistant cage clamp technology.* **Components of the interface set:** • 1 metal housing with 2 cable entries • 2 hexagonal screws with UNC 4-40 threads • 1 PCB with 9 way D-Sub female connector and 2 cage clamps • 1 blanking piece

Further bus PCBs on request

* To check compatibility with cable types and manufacturers, please contact your local HARTING representative.

InduCom 9 – Industrial bus interface system

Identification	Part number	General information
FIP Interface middle of the line 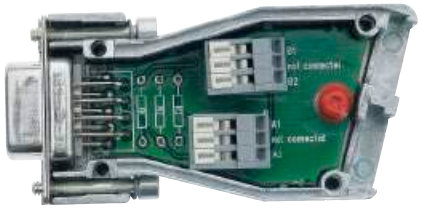 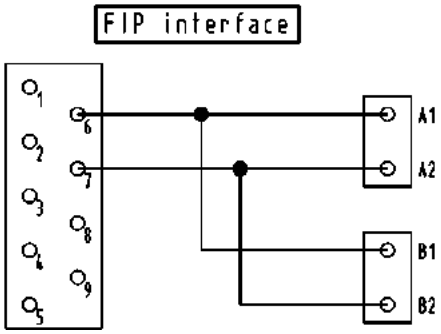	66 63 009 5017	The FIP (Factory Installation Protocol) Interface is specially designed for applications in trains. It is connected via the D-Sub. The wires are assembled with the proven vibration resistant cage clamp technology.* **Components of the interface set:** • 1 metal housing with 2 cable entries • 2 hexagonal screws with UNC 4-40 threads • 1 pcb with 9 way D-Sub female connector and cage clamps
FIP Interface end of the line 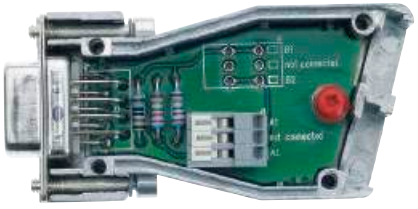 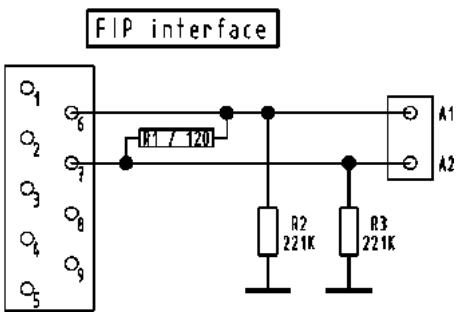	66 63 009 5018	The FIP (Factory Installation Protocol) Interface is specially designed for applications in trains. It is connected via the D-Sub. On the pcb you will have load resistors. The wires are assembled with the proven vibration resistant cage clamp technology.* **Components of the interface set:** • 1 metal housing with 2 cable entries • 2 hexagonal screws with UNC 4-40 threads • 1 pcb with 9 way D-Sub female connector and cage clamps • 1 blanking piece

Further bus PCBs on request

* To check compatibility with cable types and manufacturers, please contact your local HARTING representative.

Accessories

Identification	No. of contacts	Part number	Drawing	Dimensions in mm
Female screw locks without nut				
Thread UNC/UNC	9-50	09 67 000 9972[1]	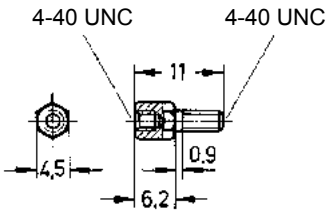	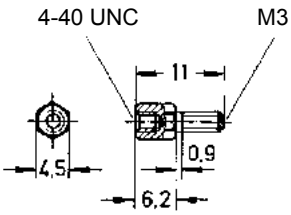
Thread UNC/M3	9-50	09 67 000 9974[1]		
Thread M3/UNC	9-50	09 67 001 9976[1]	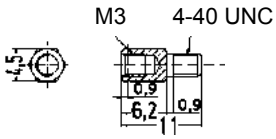	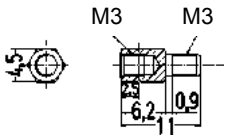
Thread M3/M3	9-50	09 67 001 9974[1]		
Thread UNC/UNC	9-50	09 67 001 9941[1]	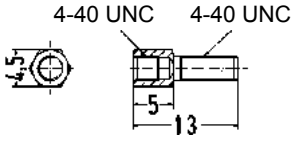	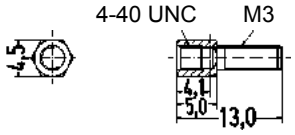
Thread UNC/M3	9-50	09 67 001 9954[1]		
for press-in connectors with grounding-pins or straight solder with grounding-clips.				
Thread UNC/UNC	9-50	09 66 000 9972[1]	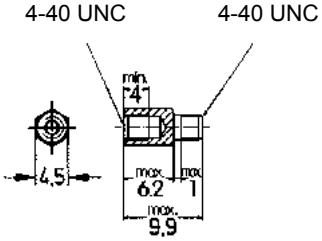	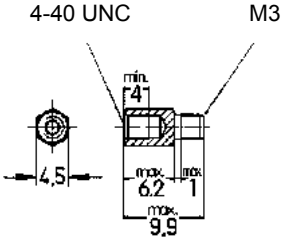
Thread UNC/M3	9-50	09 66 000 9974[1][2]		
with captive washer				
Thread UNC/UNC	9-50	09 67 001 9957[1]	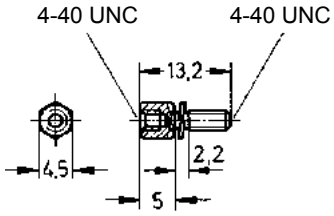	

[1] Order 2 for each connector
[2] M3 inner thread available on request

Accessories

Identification	No. of contacts	Part number	Drawing	Dimensions in mm
Female screw locks with nut				
Thread UNC/UNC	9-50	09 67 000 9922[1)]	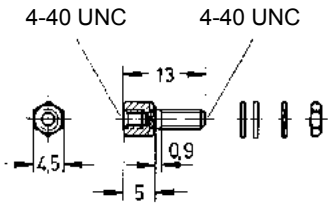	
Thread UNC/M3	9-50	09 67 000 9924[1)]	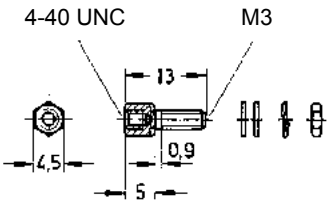	
Thread UNC/UNC	9-50	09 67 000 9973[1)]	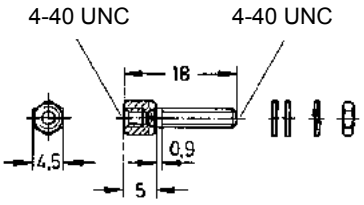	
Male screw locks for use without hood				
	9-37 50	09 67 001 9969[1)] 09 67 001 9970[1)]	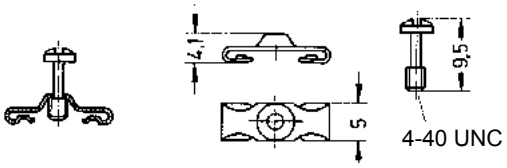	
Hex extender				
Thread 4-40 UNC	9-50	09 67 001 9985	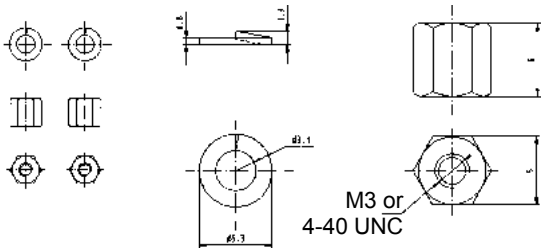	
Thread M3	9-50	09 67 002 9120		
U-Clip with thread 4-40 UNC	9-50	09 67 001 9928[1)]	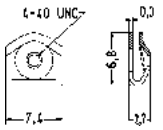	
with thread 4-40 UNC and screw-lock	9-50	09 67 002 9030[1)]	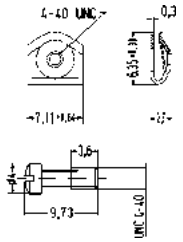	

[1)] Order 2 for each connector

Accessories

Identification	No. of contacts	Part number	Drawing	Dimensions in mm
Dust cap black thermoplastic				
for male connector	9	09 67 009 0611	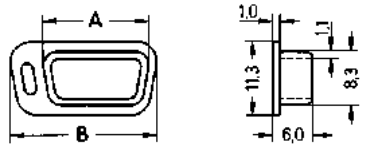	
	15	09 67 015 0611		
	25	09 67 025 0611		
	37	09 67 037 0611		

	A	B
9	17.0	22.40
15	25.3	30.80
25	38.9	44.40
37	55.4	60.75

for female connector	9	09 67 009 0711	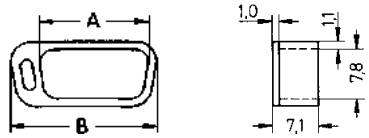
	15	09 67 015 0711	
	25	09 67 025 0711	
	37	09 67 037 0711	

	A	B
9	16.0	22.5
15	24.4	31.0
25	37.8	44.3
37	54.3	60.8

anstistatic black thermoplastic			
for male connector	9	09 67 009 0612	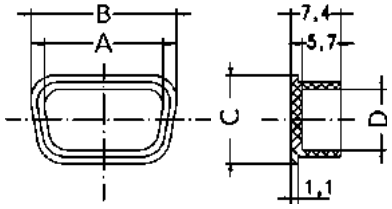
	15	09 67 015 0612	
	25	09 67 025 0612	
	37	09 67 037 0612	
	50	09 67 050 0612	

	A	B	C	D
9	17.7	21.8	13.2	9.1
15	26.0	30.0	13.2	9.1
25	40.0	44.2	13.2	9.1
37	56.4	59.8	13.2	9.1
50	53.9	57.8	15.9	11.7

for female connector	9	09 67 009 0712	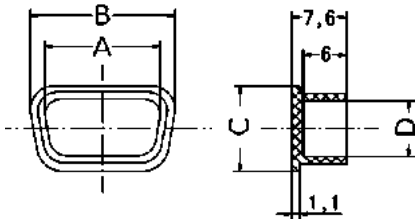
	15	09 67 015 0712	
	25	09 67 025 0712	
	37	09 67 037 0712	
	50	09 67 050 0712	

	A	B	C	D
9	15.9	20.0	11.8	7.8
15	24.4	28.5	11.8	7.8
25	38.3	42.3	11.8	7.8
37	54.7	58.8	11.8	7.8
50	52.6	56.2	14.5	10.5

UL 94 V0 grey thermoplastic			
for male connector	9	09 67 009 0613	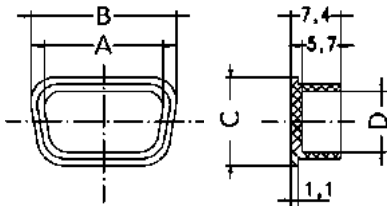
	15	09 67 015 0613	
	25	09 67 025 0613	
	37	09 67 037 0613	
	50	09 67 050 0613	

	A	B	C	D
9	17.7	21.8	13.2	9.1
15	26.0	30.0	13.2	9.1
25	40.0	44.2	13.2	9.1
37	56.4	59.8	13.2	9.1
50	53.9	57.8	15.9	11.7

for female connector	9	09 67 009 0713	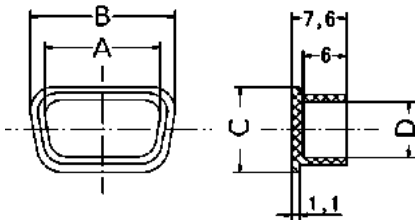
	15	09 67 015 0713	
	25	09 67 025 0713	
	37	09 67 037 0713	
	50	09 67 050 0713	

	A	B	C	D
9	15.9	20.0	11.8	7.8
15	24.4	28.5	11.8	7.8
25	38.3	42.3	11.8	7.8
37	54.7	58.8	11.8	7.8
50	52.6	56.2	14.5	10.5

Accessories

Identification	No. of contacts	Part number	Drawing	Dimensions in mm
Dust cap				
metallized thermoplastic				
for male connector	9	09 67 009 0614	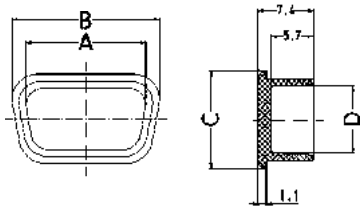	
	15	09 67 015 0614		
	25	09 67 025 0614		
	37	09 67 037 0614		
	50	09 67 050 0614		

	A	B	C	D
9	17.7	21.8	13.2	9.1
15	26.0	30.0	13.2	9.1
25	40.0	44.2	13.2	9.1
37	56.4	59.8	13.2	9.1
50	53.9	57.8	15.9	11.7

for female connector	9	09 67 009 0714	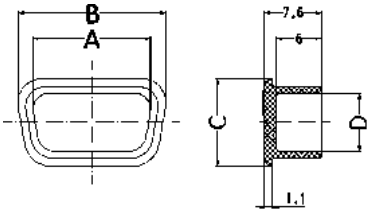	
	15	09 67 015 0714		
	25	09 67 025 0714		
	37	09 67 037 0714		
	50	09 67 050 0714		

	A	B	C	D
9	15.9	20.0	11.8	7.8
15	24.4	28.5	11.8	7.8
25	38.3	42.3	11.8	7.8
37	54.7	58.8	11.8	7.8
50	52.6	56.2	14.5	10.5

metallized thermoplastic with chain				
for male connector	9	09 67 009 0615	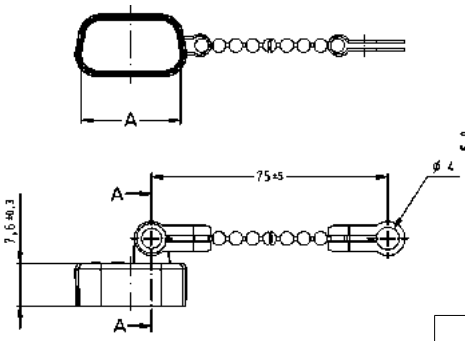	
	15	09 67 015 0615		
	25	09 67 025 0615		
	37	09 67 037 0615		
	50	09 67 050 0615		

	A	B	C	D
9	17.5	19.6	11.1	9.2
15	25.7	27.8	11.1	9.2
25	39.6	41.8	11.1	9.2
37	55.7	57.4	11.1	9.2
50	53.4	55.3	13.8	11.9

for female connector	9	09 67 009 0715	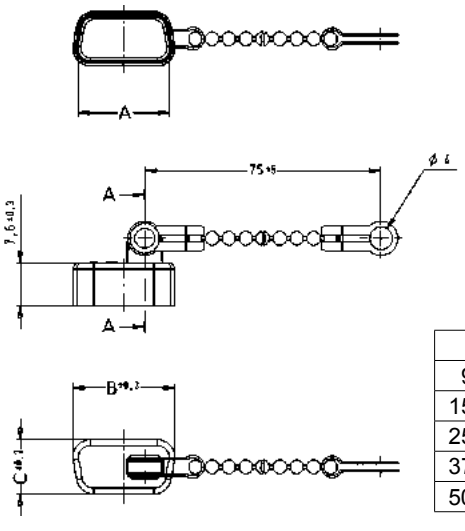	
	15	09 67 015 0715		
	25	09 67 025 0715		
	37	09 67 037 0715		
	50	09 67 050 0715		

	A	B	C	D
9	16.2	18.0	9.6	7.8
15	24.6	26.4	9.6	7.8
25	38.4	40.2	9.6	7.8
37	54.4	56.2	9.6	7.8
50	52.0	53.7	12.2	10.4

Number of contacts	9, 15, 25, 37, 50 UL recognized
Working current see current carrying capacity chart Stamped contacts	 6.5 A max.
Test voltage $U_{r.m.s.}$	1 kV
Clearance and creepage	≥ 1.0 mm
Contact resistance Insulation resistance	≤ 10 mΩ ≥ 10^{10} Ω
Temperature range The higher temperature limit includes the local ambient and heating effect of the contacts under load	-55 °C … +125 °C

Terminations

Recommended PCB through holes

		Signal pin	*Grounding pin*
Tin-lead plated PCB	Hole	$1.15^{-0.03}$	$3.15^{\pm 0.025}$
	Cu	25-75 µm	25-75 µm
	Sn	5-15 µm	4-10 µm
	Plated hole	0.94-1.09 mm	3.0-3.15 mm
Chemical tin-plated PCB	Hole	$1.05^{-0.03}$	$3.15^{\pm 0.025}$
	Cu	25-50 µm	25-50 µm
	Sn	0.8-1.0 µm	0.8-1.0 µm
	Plated hole	1.00-1.10 mm	3.0-3.15 mm
Au / Ni plated PCB	Hole	$1.15^{-0.03}$	$3.15^{\pm 0.025}$
	Cu	25-50 µm	25-50 µm
	Ni	3-7 µm	4-7 µm
	Au	0.05-0.12 µm	0.05-0.12 µm
	Plated hole	1.00-1.10 mm	3.0-3.15 mm
Silver plated PCB	Hole	$1.15^{-0.03}$	$3.15^{\pm 0.025}$
	Cu	25-50 µm	25-50 µm
	Ag	0.1-0.3 µm	0.1-0.3 µm
	Plated hole	1.00-1.10 mm	3.0-3.15 mm
OSP copper plated PCB	Hole	$1.15^{-0.03}$	$3.15^{\pm 0.025}$
	Cu	25-50 µm	25-50 µm
	Plated hole	1.00-1.10 mm	3.0-3.15 mm

PCB board thickness: ≥ 1.6 mm

Materials

Mouldings and hoods	Liquid Crystal Polymer (LCP) UL 94-V0
Contacts	Copper alloy

Contact surface

Contact zone	selectively plated acc. to performance level[1)]
Metal shell	Plated steel

Insertion and withdrawal force

Connector on P.C.B.

Press-in without grounding pins
- – insertion max. per contact: 120 N
- – withdrawal min. per contact: 20 N

Press-in with grounding pins
- – insertion max. per grounding pin: 250 N
- – withdrawal min. per grounding pin: 30 N

Mating force

9 way	≤ 30 N
15 way	≤ 50 N
25 way	≤ 83 N
37 way	≤ 123 N
50 way	≤ 167 N

Current carrying capacity

The current carrying capacity is limited by maximum temperature of materials for inserts and contacts including terminals.

The current capacity-curve is valid for continuous, not interrupted current-loaded contacts of connectors when simultaneous power on all contacts is given, without exceeding the maximum temperature.

Control and test procedures according to DIN IEC 60 512.

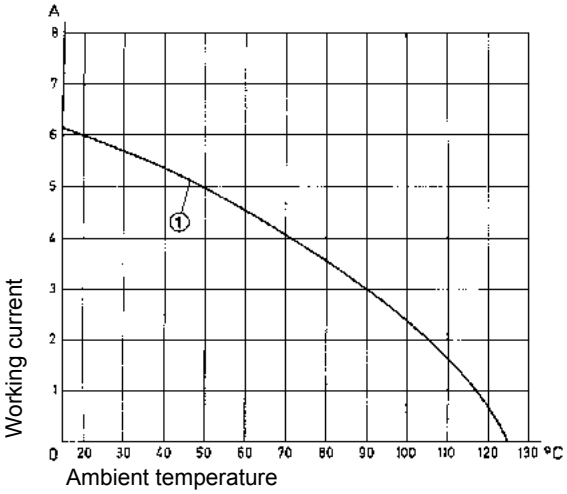

Example: 25 way connector

① Stamped contacts

Contact arrangement View from termination side

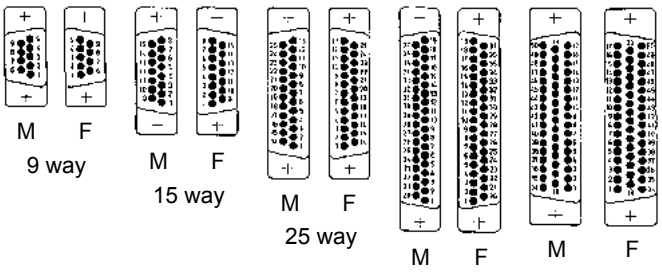

M = Male connector
F = Female connector

Mating conditions as per DIN 41 652

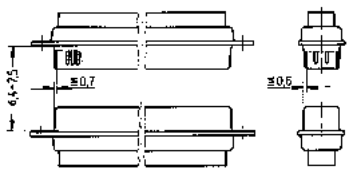

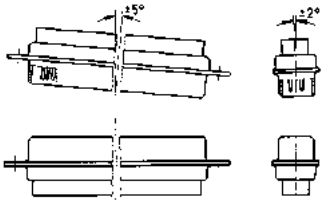

[1)] Performance level 3, 50 mating cycles, no gas test
Performance level 2 as per CECC 75 301-802, 250 mating cycles, 4 days 4 mixed gas test – IEC 60 512
Performance level 1 as per CECC 75 301-802, 500 mating cycles, 10 days 4 mixed gas test – IEC 60 512

Number of contacts

9–50

Press-in, straight with grounding press-in board locks

Identification	No. of contacts	Part number	
Performance levels ▶ Explanations see page 05.171 Other performance levels on request		Performance level 3	Performance level 2
Male connector			
Flange height x = 5.7 mm			
metal shell with dimples	9	09 66 164 771 .	09 66 164 671 .
	15	09 66 264 771 .	09 66 264 671 .
	25	09 66 364 771 .	09 66 364 671 .
Please insert digit for flange thread or fitted female screw locks			
M3 ▶ 5			
4-40 UNC ▶ 6			
fitted screw locks 4-40 UNC ▶ 7[1)]			
Female connector			
Flange height x = 5.7 mm			
metal shell	9	09 66 154 751 .	09 66 154 651 .
	15	09 66 254 751 .	09 66 254 651 .
	25	09 66 354 751 .	09 66 354 651 .
	37	09 66 454 751 .	09 66 454 651 .
Please insert digit for flange thread or fitted female screw locks			
M3 ▶ 5			
4-40 UNC ▶ 6			
fitted screw locks 4-40 UNC ▶ 7[1)]			
Female connector			
Flange height x = 6 mm			
metal shell	9	09 66 154 751 .	09 66 154 651 .
	15	09 66 254 751 .	09 66 254 651 .
	25	09 66 354 751 .	09 66 354 651 .
	37	09 66 454 751 .	09 66 454 651 .
	50	09 66 554 751 .	09 66 554 651 .
Please insert digit for flange thread or fitted female screw locks			
M3 ▶ 1			
4-40 UNC ▶ 2			
fitted screw locks 4-40 UNC ▶ 3[1)]			

[1)] Fitted screw locks 4-40 UNC not normally kept in stock for performance level 3

Connector dimensions see page 05.173. Mating conditions see page 05.171.

Number of contacts

9–50

Press-in, straight with grounding press-in board locks

Identification	Drawing	Dimensions in mm

Male connector
9 – 25 contacts

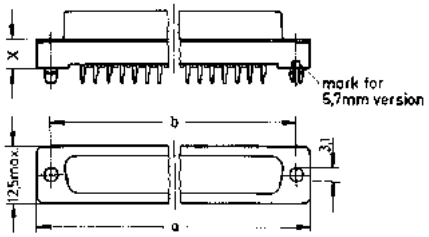

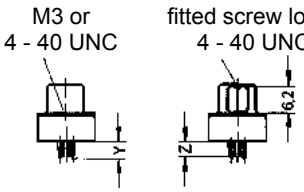

X	Y	Z
6.0 ± 0.2	4.20 ± 0.2	3.5 max.
5.7 ± 0.2	4.35 ± 0.2	3.9 max.

Female connector
9 – 37 contacts

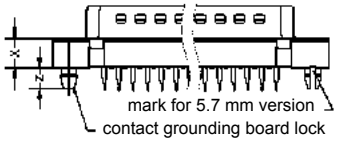

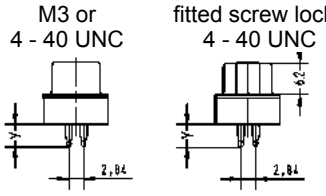

Mating face acc. to: DIN 41 652 · CECC 75 301-802 · IEC 60 807

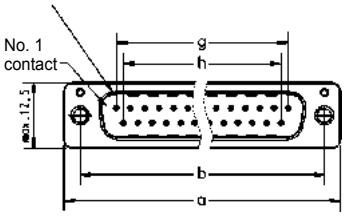

	a	b	g	h
9	31.00	24.90	4 x 2.74 = 10.96	3 x 2.74 = 8.22
15	39.30	33.20	7 x 2.74 = 19.18	6 x 2.74 = 16.44
25	53.10	47.00	12 x 2.76 = 33.12	11 x 2.76 = 30.36
37	69.65	63.55	18 x 2.76 = 49.68	17 x 2.76 = 46.92
50	67.00	61.10	16 x 2.76 = 44.16	15 x 2.76 = 41.40

Female connector
50 contacts

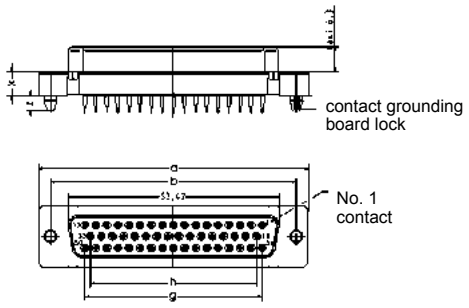

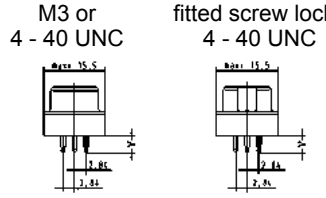

Board drillings

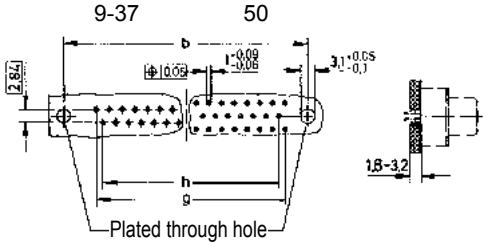

Number of contacts

9–50

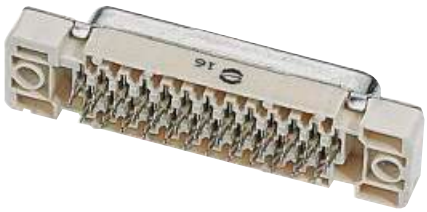

Press-in, straight without grounding press-in board locks

Identification	No. of contacts	Part number	
Performance levels Explanations see page 05.171 Other performance levels on request ▶		Performance level 3	Performance level 2
Male connector			
Flange height x = 5.7 mm			
metal shell with dimples	9	09 66 124 770 .	09 66 124 670 .
	15	09 66 224 770 .	09 66 224 670 .
	25	09 66 324 770 .	09 66 324 670 .
Please insert digit for flange thread or fitted female screw locks			
ø 3.1 mm hole ▶ 4[1]			
M3 ▶ 5			
4-40 UNC ▶ 6			
fitted screw locks 4-40 UNC ▶ 7[2]			
Female connector			
Flange height x = 5.7 mm			
metal shell	9	09 66 114 750 .	09 66 114 650 .
	15	09 66 214 750 .	09 66 214 650 .
	25	09 66 314 750 .	09 66 314 650 .
	37	09 66 414 750 .	09 66 414 650 .
Please insert digit for flange thread or fitted female screw locks			
ø 3.1 mm hole ▶ 4[1]			
M3 ▶ 5			
4-40 UNC ▶ 6			
fitted screw locks 4-40 UNC ▶ 7[2]			
Female connector			
Flange height x = 6 mm			
metal shell	9	09 66 114 750 .	09 66 114 650 .
	15	09 66 214 750 .	09 66 214 650 .
	25	09 66 314 750 .	09 66 314 650 .
	37	09 66 414 750 .	09 66 414 650 .
	50	09 66 514 750 .	09 66 514 650 .
Please insert digit for flange thread or fitted female screw locks			
ø 3.1 mm hole ▶ 0[1]			
M3 ▶ 1			
4-40 UNC ▶ 2			
fitted screw locks 4-40 UNC ▶ 3[2]			

[1] Not normally kept in stock
[2] Fitted screw locks 4-40 UNC not normally kept in stock for performance level 3
Connector dimensions see page 05.175. Mating conditions see page 05.171.

Number of contacts

9–50

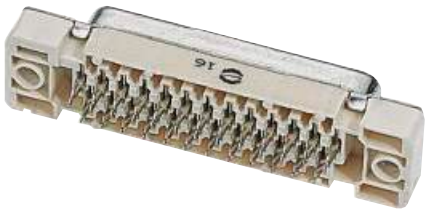

Press-in, straight without grounding press-in board locks

Identification	Drawing	Dimensions in mm

Male connector
9 – 25 contacts

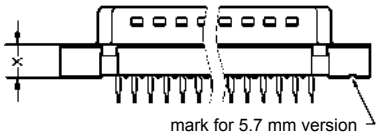

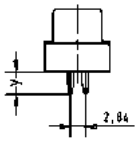

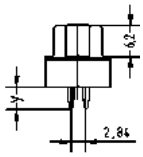

Mating face acc. to: DIN 41 652 · CECC 75 301-802 · IEC 60 807

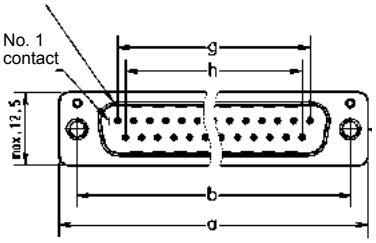

X	Y
6.0 ± 0.2	4.20 ± 0.2
5.7 ± 0.2	4.35 ± 0.2

Female connector
9 – 37 contacts

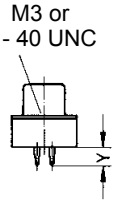

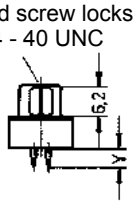

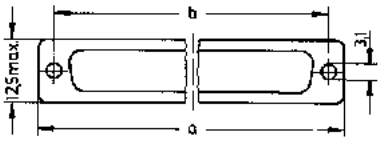

Female connector
50 contacts

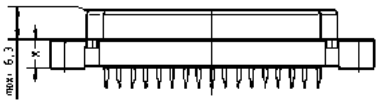

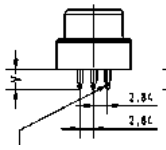

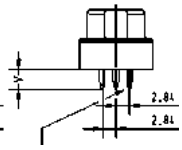

Press-in pins from position 34 to 50 are reversed 180 degrees

Mating face acc. to: DIN 41 652 · CECC 75 301-802 · IEC 60 807

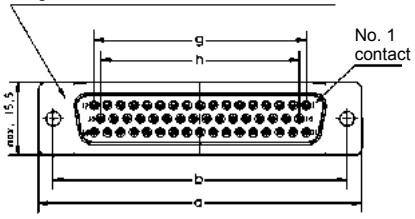

	a	b	g	h
9	31.00	24.90	4 x 2.74 = 10.96	3 x 2.74 = 8.22
15	39.30	33.20	7 x 2.74 = 19.18	6 x 2.74 = 16.44
25	53.10	47.00	12 x 2.76 = 33.12	11 x 2.76 = 30.36
37	69.65	63.55	18 x 2.76 = 49.68	17 x 2.76 = 46.92
50	67.00	61.10	16 x 2.76 = 44.16	15 x 2.76 = 41.40

Board drillings

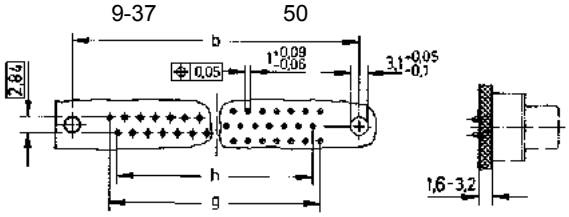

Number of contacts	9, 15, 25, 37 UL recognized
Working current see current carrying capacity chart Stamped contacts	 6.5 A max.
Test voltage $U_{r.m.s.}$	1 kV
Clearance and creepage	≥ 1.0 mm
Contact resistance **Insulation resistance**	≤ 10 mΩ ≥ 10^{10} Ω
Temperature range during reflow soldering The higher temperature limit includes the local ambient and heating effect of the contacts under load. All connectors are suitable for standard reflow processes.	-55 °C … +125 °C max. + 240 °C for 15 s
Terminations	a) Solder pins Ø 0.6 mm for P.C.B. holes Ø 0.8/1 mm b) Solder pins, angled 90° Ø 0.6 mm for P.C.B. holes Ø 1 mm
Materials Mouldings	 Thermoplastic resin, glass-fibre filled (PCT), UL 94-V0
Contacts	Copper alloy
Contact surface Contact zone	 selectively gold-plated according to performance level[1)]
Metal shell	Plated steel

Insertion and withdrawal force
Connector on P.C.B.
Solder, straight with clips
– insertion max. per connector: 60 N
– withdrawal min. per connector: 10 N

Mating force

9 way	≤ 30 N
15 way	≤ 50 N
25 way	≤ 83 N
37 way	≤ 123 N

Current carrying capacity

The current carrying capacity is limited by maximum temperature of materials for inserts and contacts including terminals.

The current capacity-curve is valid for continuous, not interrupted current-loaded contacts of connectors when simultaneous power on all contacts is given, without exceeding the maximum temperature.

Control and test procedures according to DIN IEC 60 512.

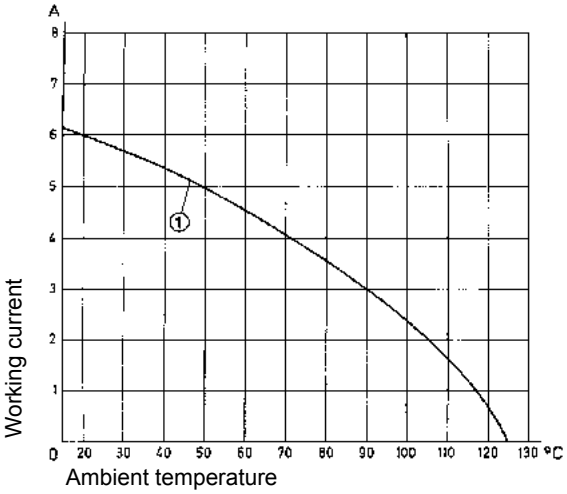

Example: 25 way connector
① Stamped contacts

Contact arrangement View from termination side

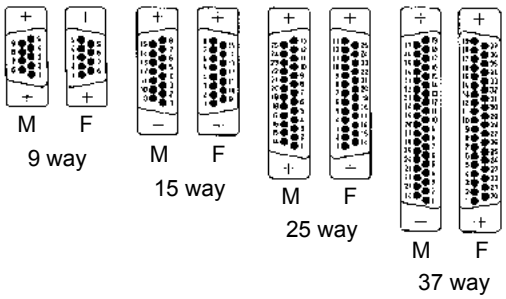

M = Male connector
F = Female connector

Mating conditions as per DIN 41 652

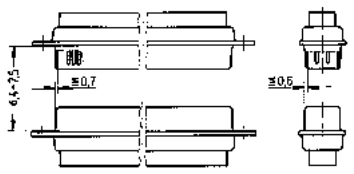

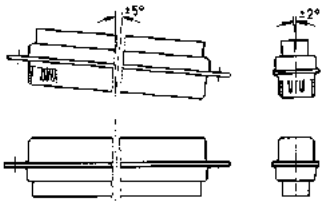

[1)] Performance level 3, 50 mating cycles, no gas test
Performance level 2 as per CECC 75 301-802, 250 mating cycles, 4 days 4 mixed gas test – IEC 60 512
Performance level 1 as per CECC 75 301-802, 500 mating cycles, 10 days 4 mixed gas test – IEC 60 512

Identification	Drawing	Dimensions in mm

Standard Versions

Mounting height 7.3 mm

9-37 way
for front panel
4 units of width (TE)

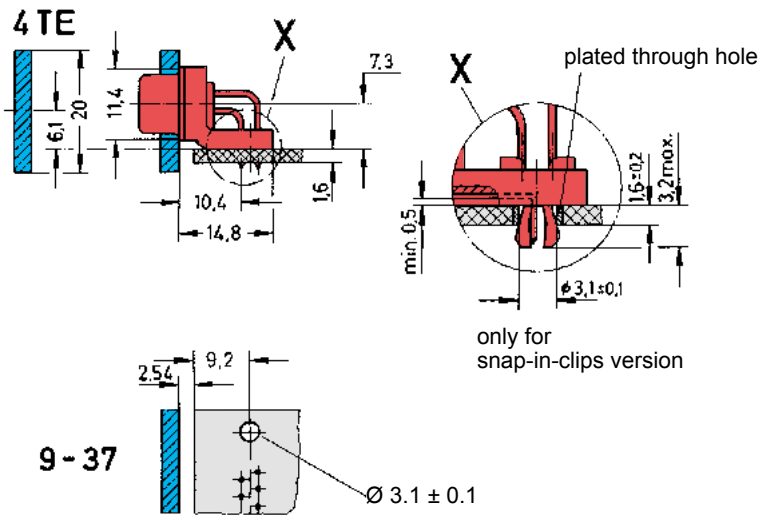

for connectors see pages 05.180 – 05.181

Low-Profile Versions

Mounting height 3.6 mm

9-37 way
for front panel
3 units of width (TE)

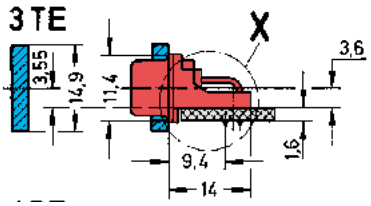

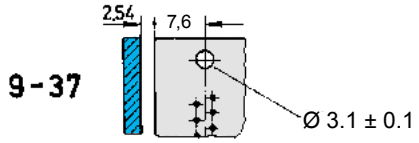

for connectors see pages 05.182 – 05.183

Panel cut out for front/rear mount

Values are taken from the CECC 75301-802

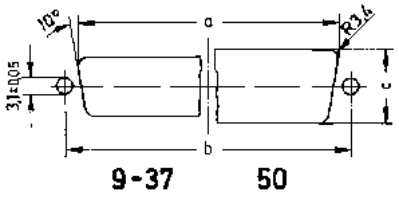

Front mount

	$a_{\pm 0.2}$	$b_{\pm 0.13}$	$c_{\pm 0.2}$
9	22.2	25.0	12.3
15	30.5	33.3	12.3
25	44.3	47.0	12.3
37	60.7	63.5	12.3
50	58.3	61.1	15.1

Rear mount

	$a_{\pm 0.2}$	$b_{\pm 0.13}$	$c_{\pm 0.2}$
9	20.5	25.0	11.4
15	28.8	33.3	11.4
25	42.5	47.0	11.4
37	59.1	63.5	11.4
50	56.3	61.1	14.1

Number of contacts

9–37

SMC stamped solder pins, straight with/without grounding board locks

Identification	No. of contacts	Part number	
		Performance level 3	Performance level 2
Performance levels ▶ Explanations see page 05.176 Other performance levels on request			
Male connector metal shell with dimples			
Without grounding board locks	9	09 65 129 770 .	09 65 129 670 .
	15	09 65 229 770 .	09 65 229 670 .
	25	09 65 329 770 .	09 65 329 670 .
	37	09 65 429 770 .	09 65 429 670 .
With grounding board locks	9	09 65 169 771 .	09 65 169 671 .
	15	09 65 269 771 .	09 65 269 671 .
	25	09 65 369 771 .	09 65 369 671 .
	37	09 65 469 771 .	09 65 469 671 .
Female connector metal shell			
Without grounding board locks	9	09 66 115 750 .	09 66 115 650 .
	15	09 66 215 750 .	09 66 215 650 .
	25	09 66 315 750 .	09 66 315 650 .
	37	09 66 415 750 .	09 66 415 650 .
With grounding board locks	9	09 66 155 751 .	09 66 155 651 .
	15	09 66 255 751 .	09 66 255 651 .
	25	09 66 355 751 .	09 66 355 651 .
	37	09 66 455 751 .	09 66 455 651 .
Please insert digit for flange thread or fitted female screw locks			
M3 ▶ 1			
4-40 UNC ▶ 2			
fitted screw locks 4-40 UNC ▶ 3[1)]			

[1)] Fitted screw locks 4-40 UNC not normally kept in stock for performance level 3

Connector dimensions see page 05.179. Mating conditions see page 05.176.

Number of contacts

9–37

SMC stamped solder pins, straight with/without grounding board locks

Identification	Drawing	Dimensions in mm

Male connector

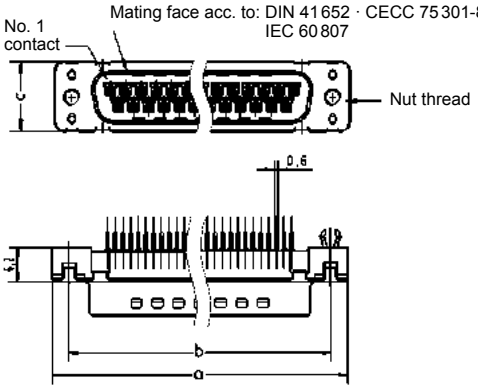

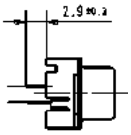

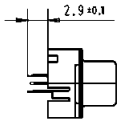

Female connector

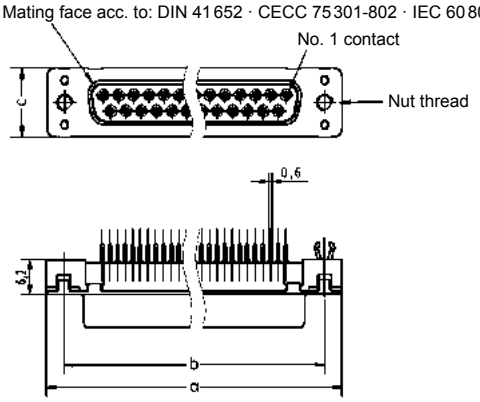

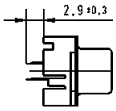

	a	$b_{\pm 0.1}$	c	g	h
9	30.9	25.0	12.5	4 x 2.74 = 10.96	3 x 2.74 = 8.22
15	39.2	33.3	12.5	7 x 2.74 = 19.18	6 x 2.74 = 16.44
25	53.1	47.0	12.5	12 x 2.76 = 33.12	11 x 2.76 = 30.36
37	69.4	63.5	12.5	18 x 2.76 = 49.68	17 x 2.76 = 46.92

Board drillings

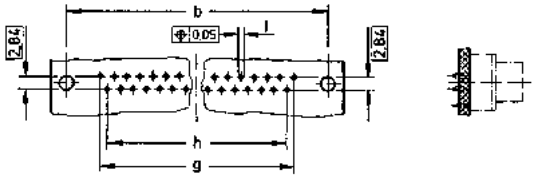

Standard Versions

Number of contacts

9–37

Mounting height

SMC stamped solder pins, angled with grounding board locks

Identification	No. of contacts	Part number	
		Performance level 3	Performance level 2
Performance levels ▶ Explanations see page 05.176 Other performance levels on request			
Male connector metal shell with dimples			
		2.84 mm pitch	2.84 mm pitch
	9	09 65 167 781 . [1]	09 65 167 681 . [1]
	15	09 65 267 781 . [1]	09 65 267 681 . [1]
	25	09 65 367 781 . [1]	09 65 367 681 . [1]
	37	09 65 467 781 . [1]	09 65 467 681 . [1]
		2.54 mm pitch	2.54 mm pitch
	9	09 65 166 781 .	09 65 166 681 .
	15	09 65 266 781 .	09 65 266 681 .
	25	09 65 366 781 .	09 65 366 681 .
	37	09 65 466 781 .	09 65 466 681 .
Female connector metal shell			
		2.84 mm pitch	2.84 mm pitch
	9	09 66 157 761 . [1]	09 66 157 661 . [1]
	15	09 66 257 761 . [1]	09 66 257 661 . [1]
	25	09 66 357 761 . [1]	09 66 357 661 . [1]
	37	09 66 457 761 . [1]	09 66 457 661 . [1]
		2.54 mm pitch	2.54 mm pitch
	9	09 66 156 761 .	09 66 156 661 .
	15	09 66 256 761 .	09 66 256 661 .
	25	09 66 356 761 .	09 66 356 661 .
	37	09 66 456 761 .	09 66 456 661 .

Please insert digit for flange thread or fitted female screw locks

Ø 3.1 mm hole ▶	0[1]
M3 ▶	1
4-40 UNC ▶	2
fitted screw locks 4-40 UNC ▶	3

[1] Not normally kept in stock

Standard Versions

Number of contacts

9–37

Mounting height

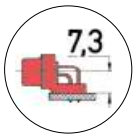

SMC stamped solder pins, angled with grounding board locks

Identification	Drawing	Dimensions in mm

Male connector

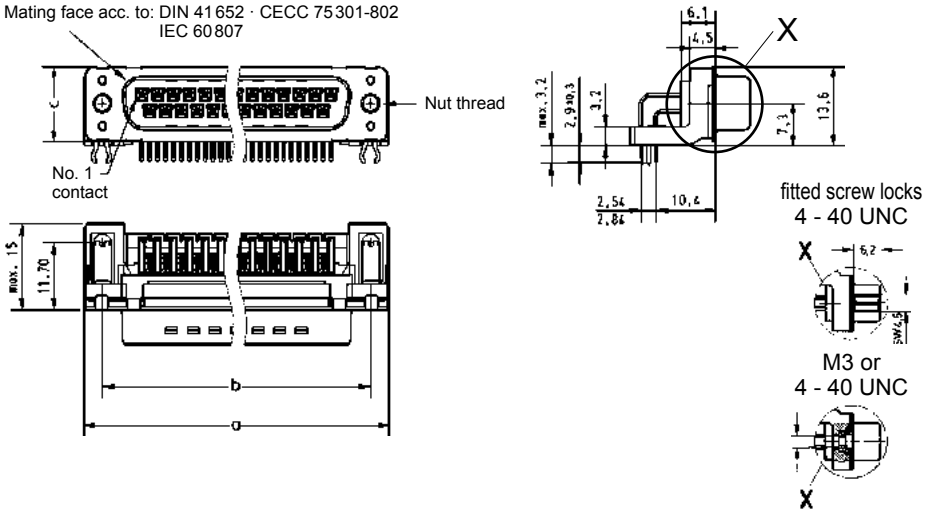

Female connector

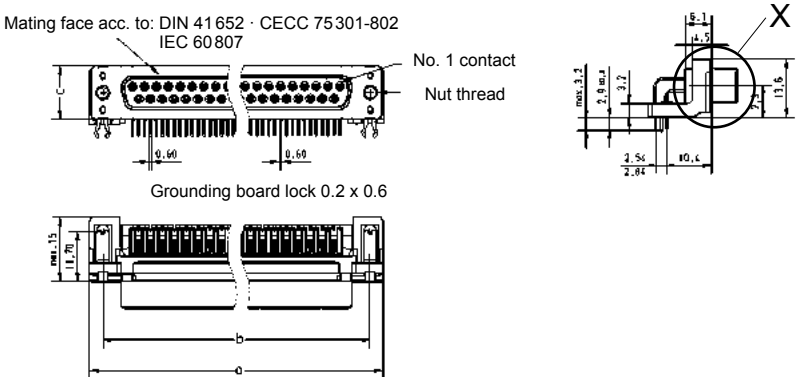

Board drillings

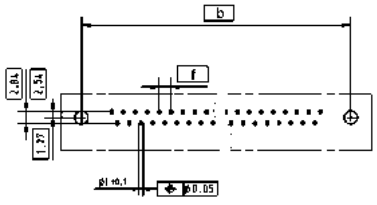

	a	$b_{\pm 0.1}$	c	f
9	30.90	25.00	12.50	2.74
15	39.20	33.30	12.50	2.74
25	53.10	47.00	12.50	2.76
37	69.40	63.50	12.50	2.76

Mating conditions see page 05.176
Mounting details see page 05.177

Number of contacts

9–37

Mounting height

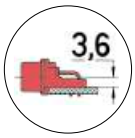

Low-Profile Versions

SMC stamped solder pins, angled with grounding board locks

Identification	No. of contacts	Part number	
Performance levels Explanations see page 05.176 Other contact surfaces on request ▶		Performance level 3	Performance level 2
Male connector metal shell with dimples	9	09 65 166 781 .	09 65 166 681 .
	15	09 65 266 781 .	09 65 266 681 .
	25	09 65 366 781 .	09 65 366 681 .
	37	09 65 466 781 .	09 65 466 681 .
Female connector metal shell	9	09 66 156 761 .	09 66 156 661 .
	15	09 66 256 761 .	09 66 256 661 .
	25	09 66 356 761 .	09 66 356 661 .
	37	09 66 456 761 .	09 66 456 661 .
Please insert digit for flange thread or fitted female screw locks M3 ▶ 5 4-40 UNC ▶ 6 fitted screw locks 4-40 UNC ▶ 7			

Low-Profile Versions

Number of contacts

9–37

Mounting height

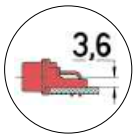

SMC stamped solder pins, angled with grounding board locks

Identification	Drawing	Dimensions in mm

Male connector

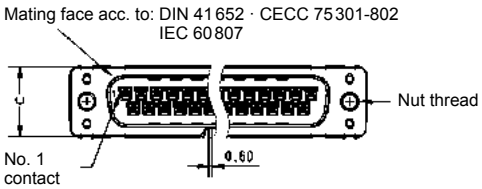

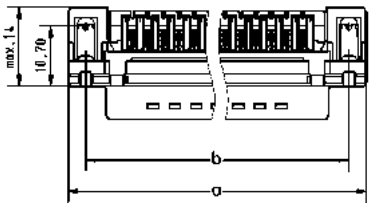

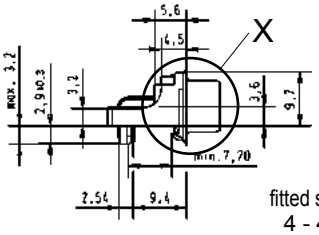

fitted screw locks
4 - 40 UNC

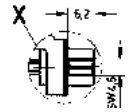

M3 or
4 - 40 UNC

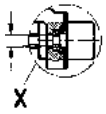

Female connector

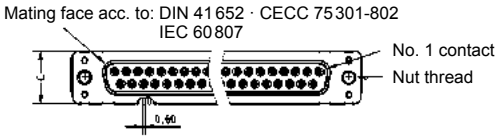

Grounding board lock 0.2 x 0.6

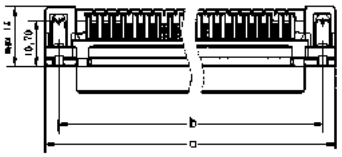

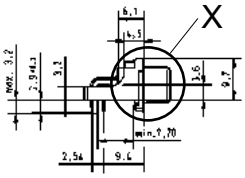

Board drillings

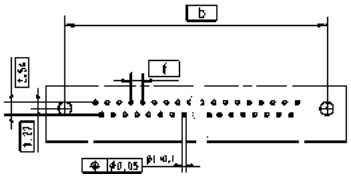

	a	$b_{\pm 0.1}$	c	f
9	30.90	25.00	12.50	2.74
15	39.20	33.30	12.50	2.74
25	53.10	47.00	12.50	2.76
37	69.40	63.50	12.50	2.76

Mating conditions see page 05.176
Mounting details see page 05.177

Number of contacts	9, 15, 25, 37 UL recognized
Working current	5 A
Test voltage $U_{r.m.s.}$	1 kV
Clearance and creepage	≥ 1.0 mm
Contact resistance Insulation resistance	< 25 mΩ > 5 GΩ
Temperature range	as per profile JEDEC 020 D
Terminations	Solder pins for P.C.B. pads
Materials	
Mouldings	LCP black UL 94-V0
Contacts	Phosphorus bronze
Grounding die	Zamac
Shell	Steel
Contact surface	
Contact zone	selectively plated acc. to performance level[1)]
Grounding die	Pure tin
Shell	Nickel plated
Mating force	
9 way	≤ 30 N
15 way	≤ 50 N
25 way	≤ 83 N
37 way	≤ 123 N

Contact arrangement View from termination side

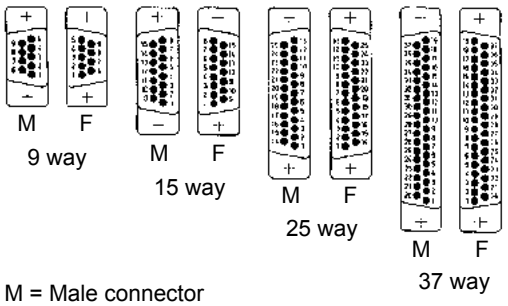

M = Male connector
F = Female connector

Mating conditions as per DIN 41652

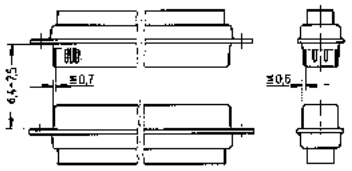

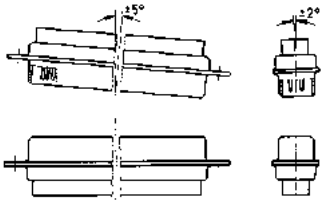

[1)] Performance level 3, 50 mating cycles, no gas test
Performance level 2 as per CECC 75301-802, 250 mating cycles, 4 days 4 mixed gas test – IEC 60512

Notes

Standard Versions

Number of contacts

9–37

SMT stamped solder pins, angled with grounding dies

Identification	No. of contacts	Part number	
Performance levels ▶ Explanations see page 05.184 Other performance levels on request		Performance level 3	Performance level 2
Male connector metal shell with dimples	9	09 55 166 78 . . 741	09 55 166 68 . . 741
	15	09 55 266 78 . . 741	09 55 266 68 . . 741
	25	09 55 366 78 . . 741	09 55 366 68 . . 741
	37	09 55 466 78 . . 741	09 55 466 68 . . 741
Female connector metal shell	9	09 55 156 76 . . 741	09 55 156 66 . . 741
	15	09 55 256 76 . . 741	09 55 256 66 . . 741
	25	09 55 356 76 . . 741	09 55 356 66 . . 741
	37	09 55 456 76 . . 741	09 55 456 66 . . 741
Packaging: 140 pieces on a reel			
Please insert digit for flange thread or fitted female screw locks			
M3 ▶ 11			
4-40 UNC ▶ 12			
non-removable fitted screw locks M3 ▶ 21			
non-removable fitted screw locks 4-40 UNC ▶ 22			
Samples			
Male connector metal shell with dimples	9	If performance level 3 is required please order as substitute performance level 2	09 55 166 68 . . 333
	15		09 55 266 68 . . 333
	25		09 55 366 68 . . 333
	37		09 55 466 68 . . 333
Female connector metal shell	9		09 55 156 66 . . 333
	15		09 55 256 66 . . 333
	25		09 55 356 66 . . 333
	37		09 55 456 66 . . 333
Packaging **9, 15 contacts: 5 samples** **25, 37 contacts: 3 samples**			
Please insert digit for flange thread or fitted female screw locks			
4-40 UNC ▶ 12			
non-removable fitted screw locks 4-40 UNC ▶ 22			

Connector dimensions see page 05.187. Mating conditions see page 05.184.

Standard Versions

Number of contacts

9–37

SMT stamped solder pins, angled with grounding dies

Identification	Drawing	Dimensions in mm

Male connector

M3 or 4-40 UNC non-removable fitted screw locks M3 or 4-40 UNC

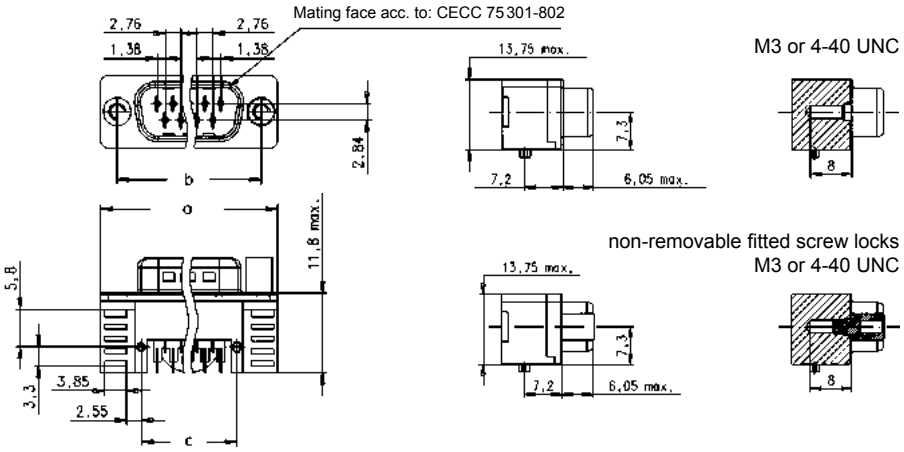

Female connector

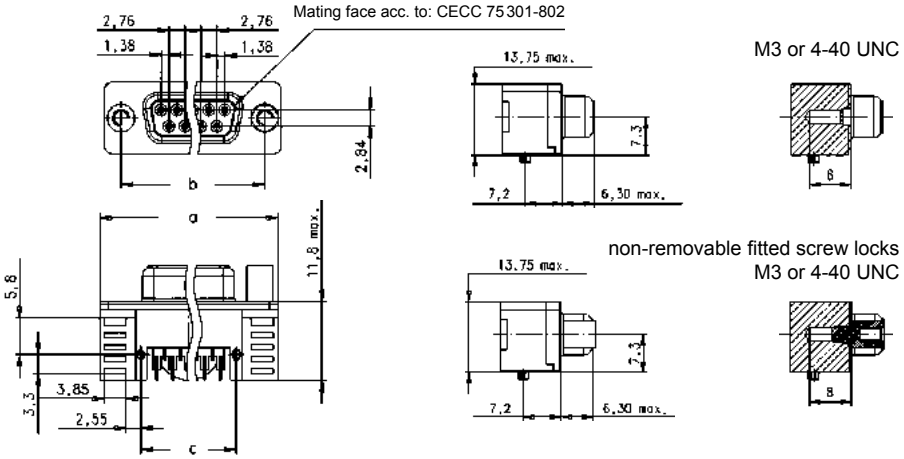

pcb layout

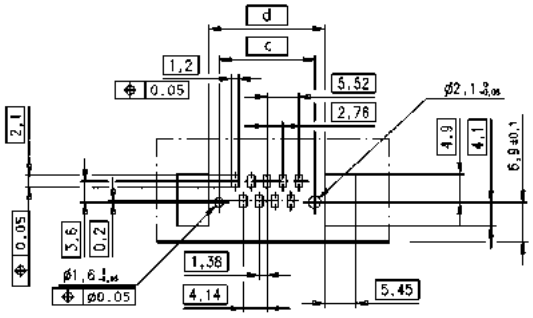

	a	b	c	d
9	31.10	24.99	16.60	20.1
15	39.52	33.32	24.90	28.4
25	53.29	47.04	38.64	42.1
37	69.60	63.50	55.10	58.6

Packaging

(1 reel = 140 pieces)
Reel diameter = 380 mm

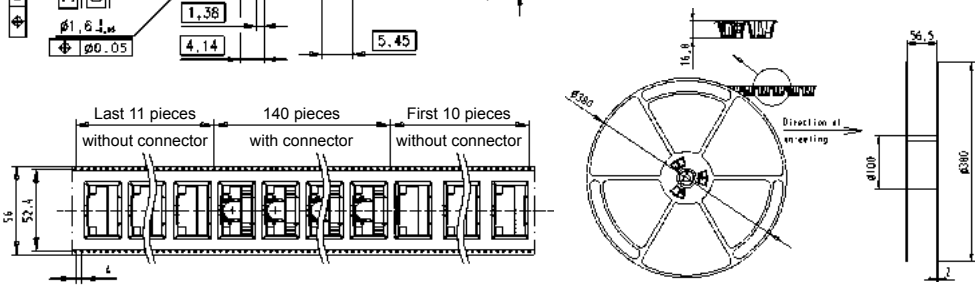

Low-Profile Versions

Number of contacts

9–37

SMT stamped solder pins, angled with grounding dies

Identification	No. of contacts	Part number	
Performance levels ▶ Explanations see page 05.184 Other performance levels on request		Performance level 3	Performance level 2
Male connector metal shell with dimples	9	09 55 166 78 . . 741	09 55 166 68 . . 741
	15	09 55 266 78 . . 741	09 55 266 68 . . 741
	25	09 55 366 78 . . 741	09 55 366 68 . . 741
	37	09 55 466 78 . . 741	09 55 466 68 . . 741
Female connector metal shell	9	09 55 156 76 . . 741	09 55 156 66 . . 741
	15	09 55 256 76 . . 741	09 55 256 66 . . 741
	25	09 55 356 76 . . 741	09 55 356 66 . . 741
	37	09 55 456 76 . . 741	09 55 456 66 . . 741
Packaging: 160 pieces on a reel			
Please insert digit for flange thread or fitted female screw locks			
M3 ▶ 15			
4-40 UNC ▶ 16			
non-removable fitted screw locks M3 ▶ 19			
non-removable fitted screw locks 4-40 UNC ▶ 20			

Samples

Male connector metal shell with dimples	9	If performance level 3 is required please order as substitute performance level 2	09 55 166 68 . . 333
	15		09 55 266 68 . . 333
	25		09 55 366 68 . . 333
	37		09 55 466 68 . . 333
Female connector metal shell	9		09 55 156 66 . . 333
	15		09 55 256 66 . . 333
	25		09 55 356 66 . . 333
	37		09 55 456 66 . . 333
Packaging **9, 15 contacts: 5 samples** **25, 37 contacts: 3 samples**			
Please insert digit for flange thread or fitted female screw locks			
4-40 UNC ▶ 16			
non-removable fitted screw locks 4-40 UNC ▶ 20			

Connector dimensions see page 05.189. Mating conditions see page 05.184.

Low-Profile Versions

Number of contacts

9–37

SMT stamped solder pins, angled with grounding dies

Identification	Drawing	Dimensions in mm

Male connector

M3 or 4-40 UNC non-removable fitted screw locks M3 or 4-40 UNC

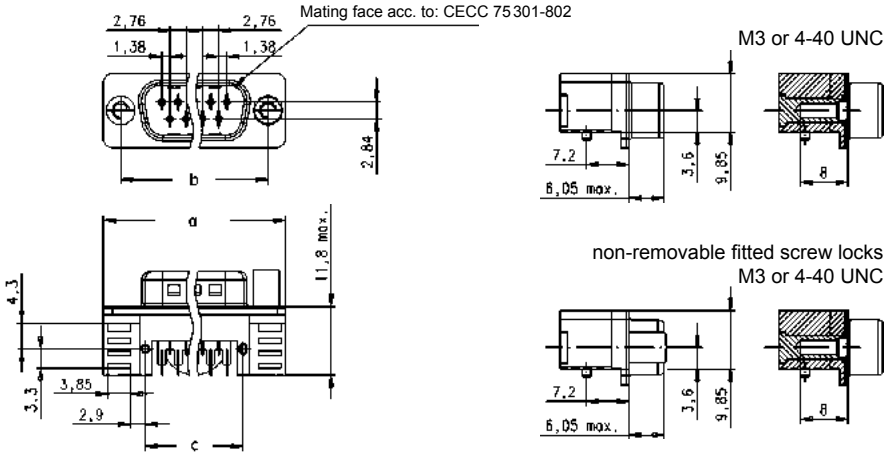

Female connector

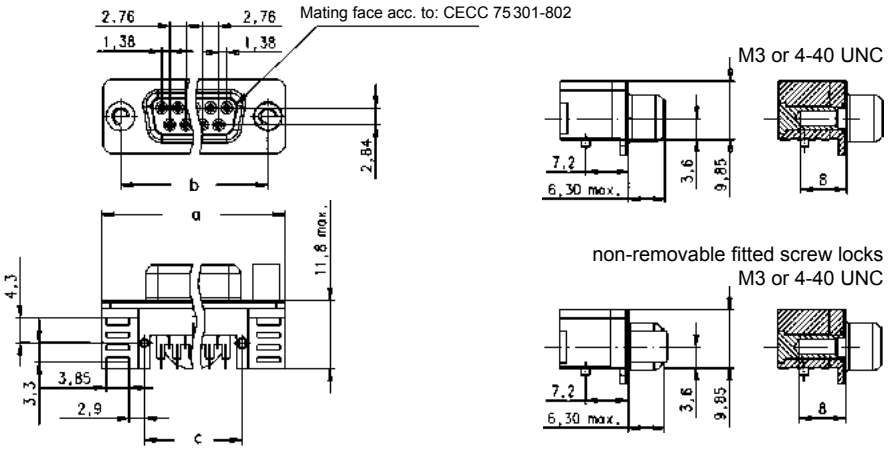

pcb layout

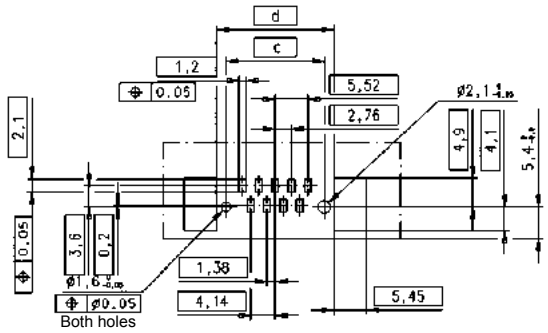

	a	b	c	d
9	31.10	24.99	16.60	20.1
15	39.52	33.32	24.90	28.4
25	53.29	47.04	38.64	42.1
37	69.60	63.50	55.10	58.6

Packaging

(1 reel = 160 pieces)
Reel diameter = 330 mm

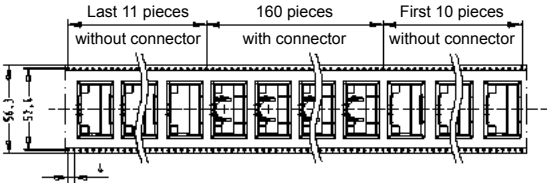

Number of contacts

9–37

SMT stamped solder pins, straight without grounding pins

Identification	No. of contacts	Part number	
Performance levels ▶ Explanations see page 05.184 Other performance levels on request		Performance level 3	Performance level 2
Male connector metal shell with dimples	9	09 55 129 78 . . 741	09 55 129 68 . . 741
	15	09 55 229 78 . . 741	09 55 229 68 . . 741
	25	09 55 329 78 . . 741	09 55 329 68 . . 741
	37	09 55 429 78 . . 741	09 55 429 68 . . 741
Female connector metal shell	9	09 55 115 76 . . 741	09 55 115 66 . . 741
	15	09 55 215 76 . . 741	09 55 215 66 . . 741
	25	09 55 315 76 . . 741	09 55 315 66 . . 741
	37	09 55 415 76 . . 741	09 55 415 66 . . 741
Packaging: 140 pieces on a reel			
Please insert digit for flange thread or fitted female screw locks			
M3 ▶ 11 4-40 UNC ▶ 12 fixed screw locks M3 ▶ 21 fixed screw locks 4-40 UNC ▶ 22			
Samples			
Male connector metal shell with dimples	9	If performance level 3 is required please order as substitute performance level 2	09 55 129 68 . . 333
	15		09 55 229 68 . . 333
	25		09 55 329 68 . . 333
	37		09 55 429 68 . . 333
Female connector metal shell	9		09 55 115 66 . . 333
	15		09 55 215 66 . . 333
	25		09 55 315 66 . . 333
	37		09 55 415 66 . . 333
Packaging **9, 15 contacts: 5 samples** **25, 37 contacts: 3 samples**			
Please insert digit for flange thread or fitted female screw locks			
4-40 UNC ▶ 12 fixed screw locks 4-40 UNC ▶ 22			

Connector dimensions see page 05.191. Mating conditions see page 05.184.

Number of contacts

9–37

SMT stamped solder pins, straight without grounding pins

Identification	Drawing	Dimensions in mm

Male connector

M3 or 4-40 UNC non-removable fitted screw
locks M3 or 4-40 UNC

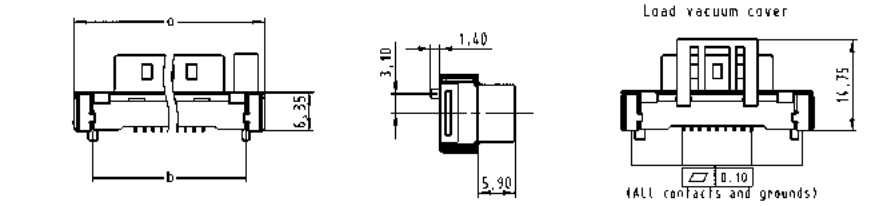

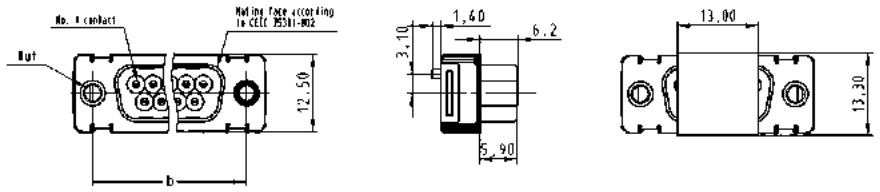

Female connector

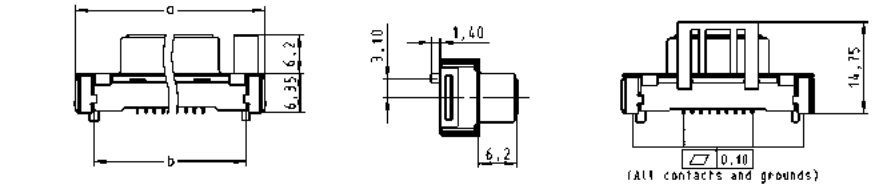

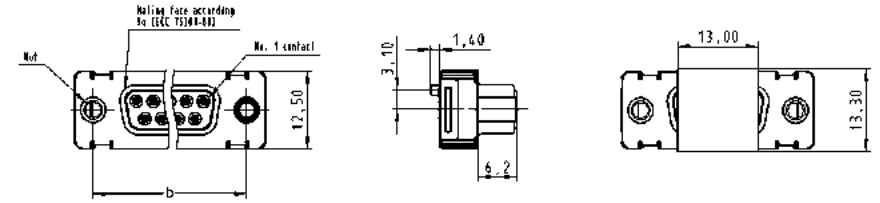

pcb layout

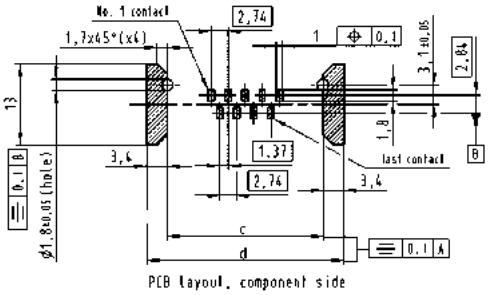

PCB layout, component side

	a	b	c	d
9	31.12	25.00	25.0	31.8
15	39.45	33.33	33.3	40.1
25	53.35	47.04	47.0	53.8
37	69.62	63.50	63.5	70.3

Packaging

(1 reel = 140 pieces)
Reel diameter = 380 mm

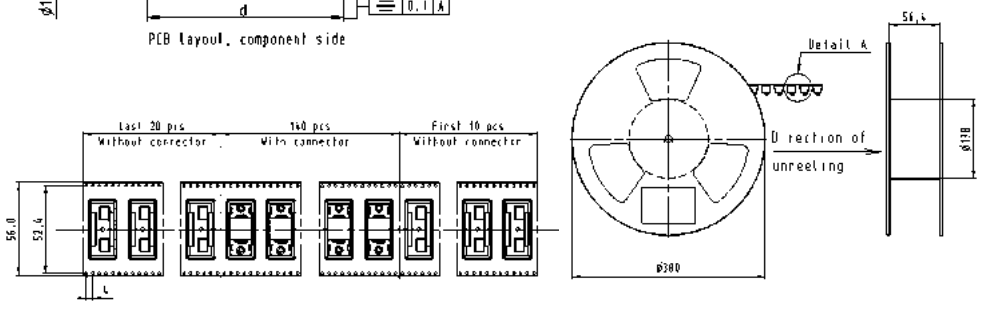

Number of contacts

9–37

SMT stamped solder pins, straight with grounding pins

Identification	No. of contacts	Part number	
Performance levels ▶ Explanations see page 05.184 Other performance levels on request		Performance level 3	Performance level 2
Male connector metal shell with dimples	9	09 55 169 78 . . 741	09 55 169 68 . . 741
	15	09 55 269 78 . . 741	09 55 269 68 . . 741
	25	09 55 369 78 . . 741	09 55 369 68 . . 741
	37	09 55 469 78 . . 741	09 55 469 68 . . 741
Female connector metal shell	9	09 55 155 76 . . 741	09 55 155 66 . . 741
	15	09 55 255 76 . . 741	09 55 255 66 . . 741
	25	09 55 355 76 . . 741	09 55 355 66 . . 741
	37	09 55 455 76 . . 741	09 55 455 66 . . 741
Packaging: 140 pieces on a reel			
Please insert digit for flange thread or fitted female screw locks M3 ▶ 11 4-40 UNC ▶ 12 fixed screw locks M3 ▶ 21 fixed screw locks 4-40 UNC ▶ 22			

Samples

Male connector metal shell with dimples	9	If performance level 3 is required please order as substitute performance level 2	09 55 169 68 . . 333
Female connector metal shell	9		09 55 155 66 . . 333
Packaging **9, 15 contacts: 5 samples** **25, 37 contacts: 3 samples**			
Please insert digit for flange thread or fitted female screw locks 4-40 UNC ▶ 12 fixed screw locks 4-40 UNC ▶ 22			

Connector dimensions see page 05.193. Mating conditions see page 05.184.

Number of contacts

9–37

SMT stamped solder pins, straight with grounding pins

Identification	Drawing	Dimensions in mm

Male connector

M3 or 4-40 UNC non-removable fitted screw
locks M3 or 4-40 UNC

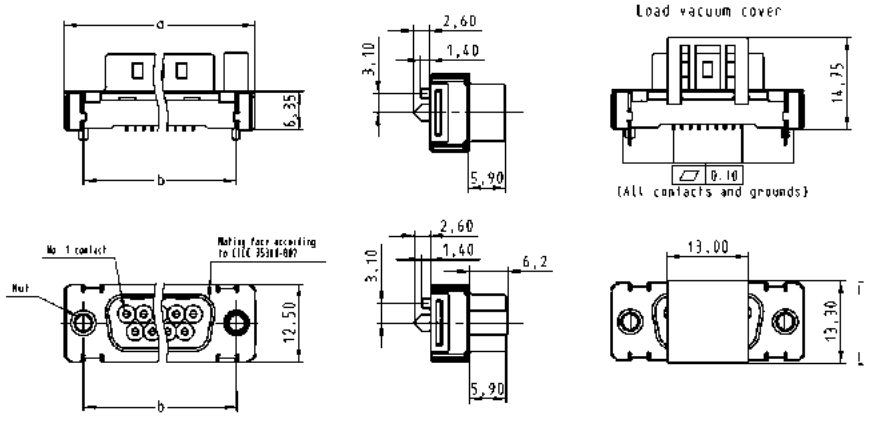

Female connector

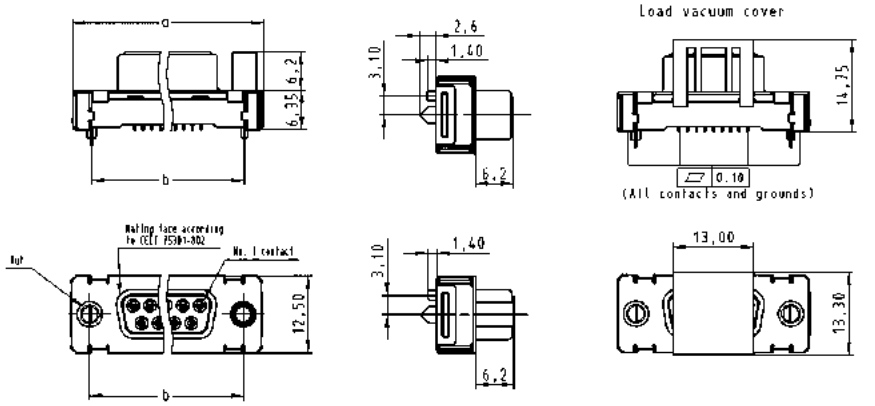

pcb layout

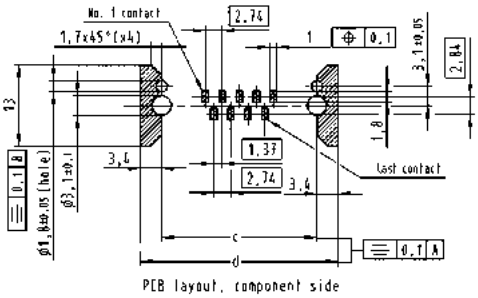

	a	b	c	d
9	31.12	25.00	25.0	31.8
15	39.45	33.33	33.3	40.1
25	53.35	47.04	47.0	53.8
37	69.62	63.50	63.5	70.3

Packaging

(1 reel = 140 pieces)
Reel diameter = 380 mm

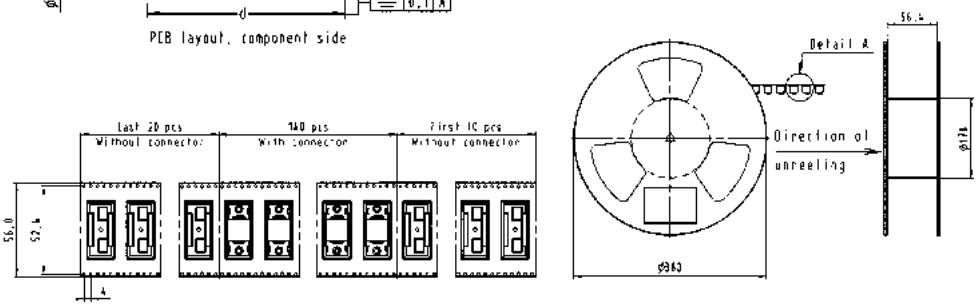

Cable assemblies

Identification	Part number	Drawing	Dimensions in mm
Cable assembly D-Sub HD 78-pole Hood: shielded plastic hood with side entry, screw 4-40 UNC Cable: 39 twisted pairs, AWG 26, double shielded, PVC Wiring: 1:1		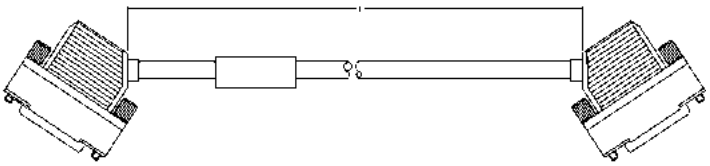	
Length: L = 0.5 m	33 56 212 0050 028		
L = 1.0 m	33 56 213 1000 002		
L = 2.0 m	33 56 213 2000 016		
L = 5.0 m	33 56 212 0500 029		
L = 10.0 m	33 56 212 1000 030		
L = 20.0 m	33 56 212 2000 031		
Cable assembly D-Sub HD 44-pole Hood: shielded plastic hood with side entry, screw 4-40 UNC Cable: 22 twisted pairs, AWG 26, double shielded, PVC Wiring: 1:1		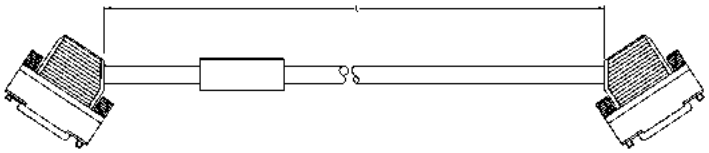	
Length: L = 0.5 m	33 56 213 0500 023		
L = 1.0 m	33 56 213 1000 024		
L = 1.5 m	33 56 213 1500 022		
L = 2.0 m	33 56 213 2000 025		
L = 5.0 m	33 56 213 5000 026		
L = 10.0 m	33 56 212 1000 027		
Cable assembly D-Sub HD 44-pole Hood: metal hood with top entry, screw 4-40 UNC Cable: 24 twisted pairs, AWG 26, double shielded, PVC Wiring: 1:1		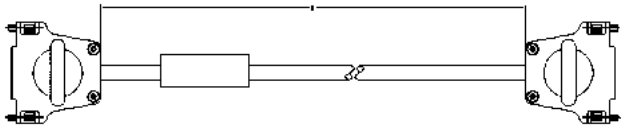	
Length: L = 0.5 m	33 56 212 0050 032		
L = 1.0 m	33 56 212 0100 033		
L = 5.0 m	33 56 212 0500 034		
L = 10.0 m	33 56 212 1000 035		
L = 20.0 m	33 56 212 2000 036		

Cable assemblies

Identification	Part number	Drawing	Dimensions in mm
Cable assembly D-Sub HD 44-pole Hood: overmoulded with side entry Cable: 24 twisted pairs, solid wires, AWG 26, shielded, halogen free Wiring: 1:1		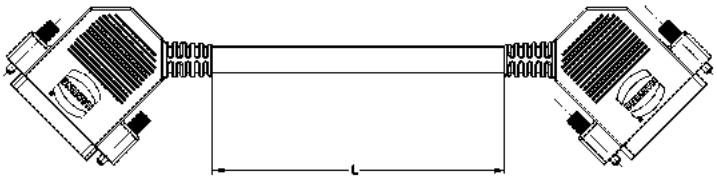	
Length: L = 0.5 m	33 56 224 5000 001		
L = 1.0 m	33 56 221 0010 001		
L = 2.0 m	33 56 221 0020 001		
L = 5.0 m	33 56 221 0050 001		
Cable assembly D-Sub 9-pole Hood: shielded plastic hood with side entry, screw 4-40 UNC Cable: 5 twisted pairs, stranded, AWG 24, shielded, PVC Wiring: 1:1		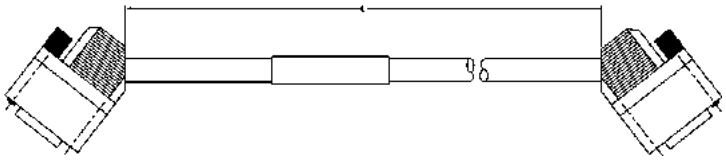	
Length: L = 0.5 m	33 66 214 5000 058		
L = 1.0 m	33 66 213 1000 059		
L = 1.5 m	33 66 213 1500 060		
L = 2.0 m	33 66 213 2000 061		
L = 5.0 m	33 66 213 5000 062		

Cables for insulation displacement termination

Identification	No. of contacts	Part number	Drawing	Dimensions in mm
Flat cable grey UL AWM-style 2651 CSA	9	09 18 009 700 ☐		
	15	09 18 015 700 ☐		
	25	09 18 025 700 ☐		
	37	09 18 037 700 ☐		

Length per reel

30.48 m (100 feet)	1
100 m (328 feet)	4

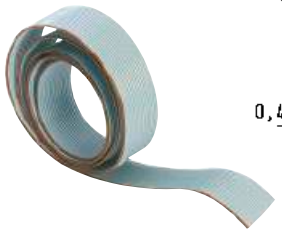

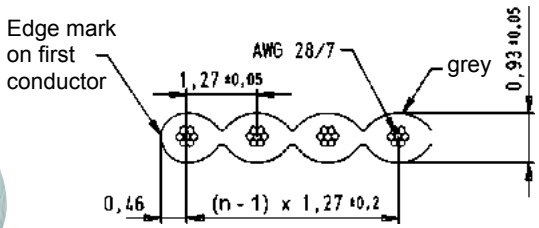

Conductor material	Copper tinned
Gauge	AWG 28/7 0.089 mm²
Voltage rating	300 $V_{r.m.s.}$
Current rating at 25 °C	2.1 A max.
Capacity unbalanced	45.9 pF/m
Impedance unbalanced	105 Ω
Propagation delay	4.9 ns/m nominal
Insulation material	PVC
Temperature rating (operating)	–20 °C … +105 °C
Temperature rating (static)	–30 °C … +105 °C
Flammability rating	UL: VW-1
Insulation resistance	> 100 MΩ/km

Important: always store reel vertically

Cables for insulation displacement termination

Identification	No. of contacts	Part number
Flat cable		
colour coded		
Length per reel 30.48 m (100 feet)		
UL AWM-style 2651		
	9	09 18 009 7005
	15	09 18 015 7005
	25	09 18 025 7005
	37	09 18 037 7005

Drawing

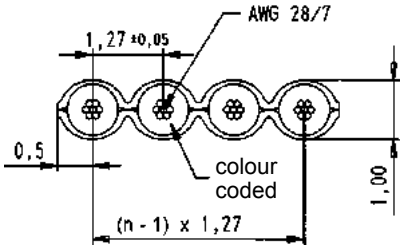

Dimensions in mm

Colour code sequence (in 10 steps)

brown, red, orange, yellow, green, blue, violet, grey, white, black

Conductor material	Copper tinned
Gauge	AWG 28/7 0.09 mm²
Voltage rating	300 $V_{r.m.s.}$
Current rating at 25 °C	2.1 A max.
Conductor resistance	221 mΩ/m
Capacity unbalanced	42.7 pF/m
Impedance unbalanced	105 Ω
Inductance unbalanced	0.68 µH/m
Signal delay	4.9 ns/m
Insulation material	PVC
Temperature rating (operating)	–20 °C … +105 °C
Temperature rating (static)	–30 °C … +105 °C
Flammability rating	UL: VW 1
Insulation resistance	100 MΩ/km

Important: always store reel vertically

Identification	No. of contacts	Part number	Drawing	Dimensions in mm
Round flat cable			ø max.	
with screening (shielding)	9	09 18 009 70 ⌴	6.86	
	15	09 18 015 70 ⌴	7.62	
	25	09 18 025 70 ⌴	9.14	
	37	09 18 037 70 ⌴	10.41	
UL listed PLCC CL2 CSA certified AWM FT-1				
Length per reel				
30.48 m (100 feet) 07				
100 m (328 feet) 10 *				
without screening (shielding)	9	09 18 009 7008	6.35	
	15	09 18 015 7008	6.86	
	25	09 18 025 7008	8.38	
	37	09 18 037 7008	9.65	
UL listed PLCC CL2 CSA certified AWM FT-1				
Length per reel 30.48 m (100 feet)				

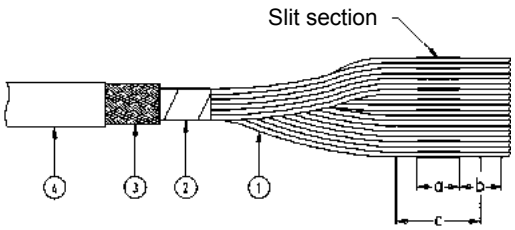

① Flat cable, AWG 28/7
② Aluminium / Polyester tape (spiral wrap)
③ 85 % minimum coverage tinned copper braid
④ Outer jacket: black PVC

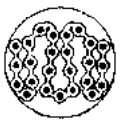

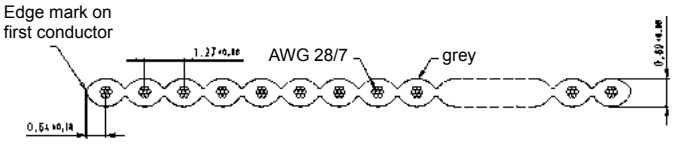

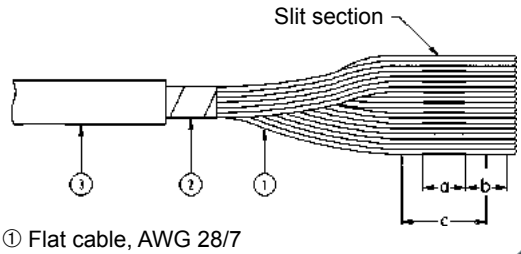

① Flat cable, AWG 28/7
② Clear polyester
③ Outer jacket: black PVC

No. of contacts	a	b	c
9 to 25	19.05	19.05	38.10
37	38.10	19.05	57.15

Conductor material	Copper tinned
Gauge	AWG 28/7 0.089 mm²
Voltage rating	300 $V_{r.m.s.}$
Conductor resistance	225 mΩ/m
Capacity unbalanced	78.7 pF/m
Impedance unbalanced	75 Ω
Signal delay	5.25 ns/m nom.
Insulation material	PVC
Temperature rating	–20 °C … +105 °C
Flammability rating	UL: VW 1
Insulation resistance	10^4 MΩ/km

* Only available for 37 contacts
Important: always store reals vertically

Notes

06. *har-mik*® Interface Connectors

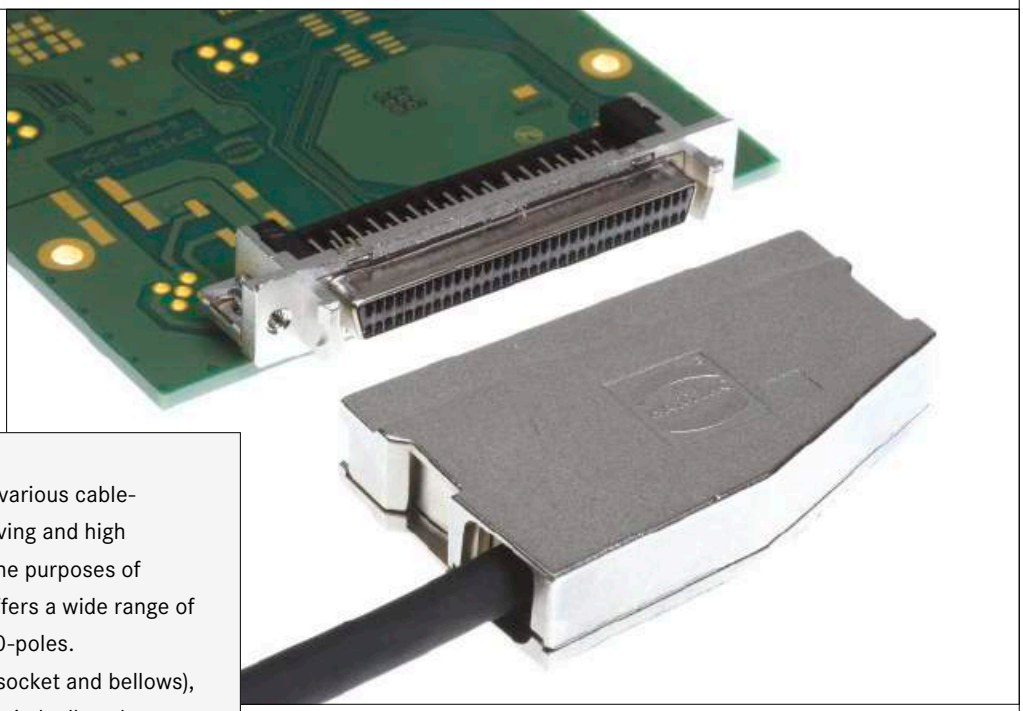

Miniature D connectors are a must in various cable-to-board applications where space saving and high data transfer rates are required. For the purposes of miniaturization and speed, HARTING offers a wide range of miniature D connectors with 14 to 100-poles.
Available in two contact styles (pin & socket and bellows), these connectors in 1.27 mm contact pitch allow data transfer rates up to 600 MHz. The *har-mik*® connectors comply with various standards such as SCSI, IPI, HIPPI, IEEE 1284.

Application profile:

CONNECTION TYPE		ENVIRONMENT		APPLICATION						
Board to Board	Cable/ Wire to Board	IP20	IP65 / IP67	Data	Signal	Power	high performance			
							Data transfer rate	Shielding	Number of contacts, contact density	Voltage, working current
	●	●		●				●	●	

Cable termination

Han-Quick Lock®

IDC

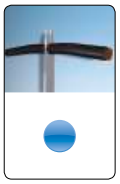

●

Crimp

Screw

Cage clamp

Axial screw

PCB termination

THT

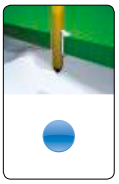

●

SMC

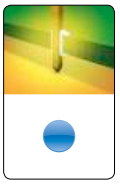

●

SMT

Press-in

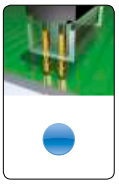

●

Application standard

SCSI

Housing integration

Separate housing

Integrated housing

Contents

	Page
har-mik® connector system – introduction	**06.02**
I/O connectors	**06.04**
Pin and socket	
Technical characteristics	**06.06**
Connectors with straight pins	**06.07**
Connectors with right angled solder pins	**06.09**
Connectors with IDC flat cable termination	**06.11**
Connectors with IDC discrete wire termination	**06.13**
Bellows	
Technical characteristics	**06.15**
Connectors with straight solder pins	**06.16**
Connectors with right angled pins	**06.17**
Connectors with IDC discrete wire termination	**06.18**
Hoods	
Technical characteristics	**06.20**
Hoods for pin and socket male connectors	**06.21**
Hoods for bellows male connectors	**06.23**
Accessories	**06.25**
Cables and cable assemblies	**06.26**

Tooling see chapter 20

har-mik® interface connectors in 1.27 mm pitch

Miniature D connectors are a must in various cable-to-board applications where space saving and high data transfer rates are required. For the purposes of miniaturization and speed, HARTING offers a wide range of miniature D connectors with 14 to 100-poles.

Available in two contact styles (pin & socket and bellows), these connectors in 1.27 mm contact pitch allow data transfer rates up to 600 MHz. The *har-mik*® connectors comply with various standards such as SCSI, IPI, HIPPI, IEEE 1284.

There are the following components available in this range:

- Straight or right angled shielded and unshielded board connectors with latch or screw fixing for standard wave soldering. The *har-mik*® connectors are suitable for press-in and SMC and are designed for pick and place assembly.
- IDC cable connectors for round discrete wire cables and flat cables.
- Metal and plastic hoods with top and side cable entry (also for cables with large diameter) for all *har-mik*® sizes.
- Flat and round cables for harnesses and screw locks for panel mounting.
- All necessary tooling for insulation displacement termination.

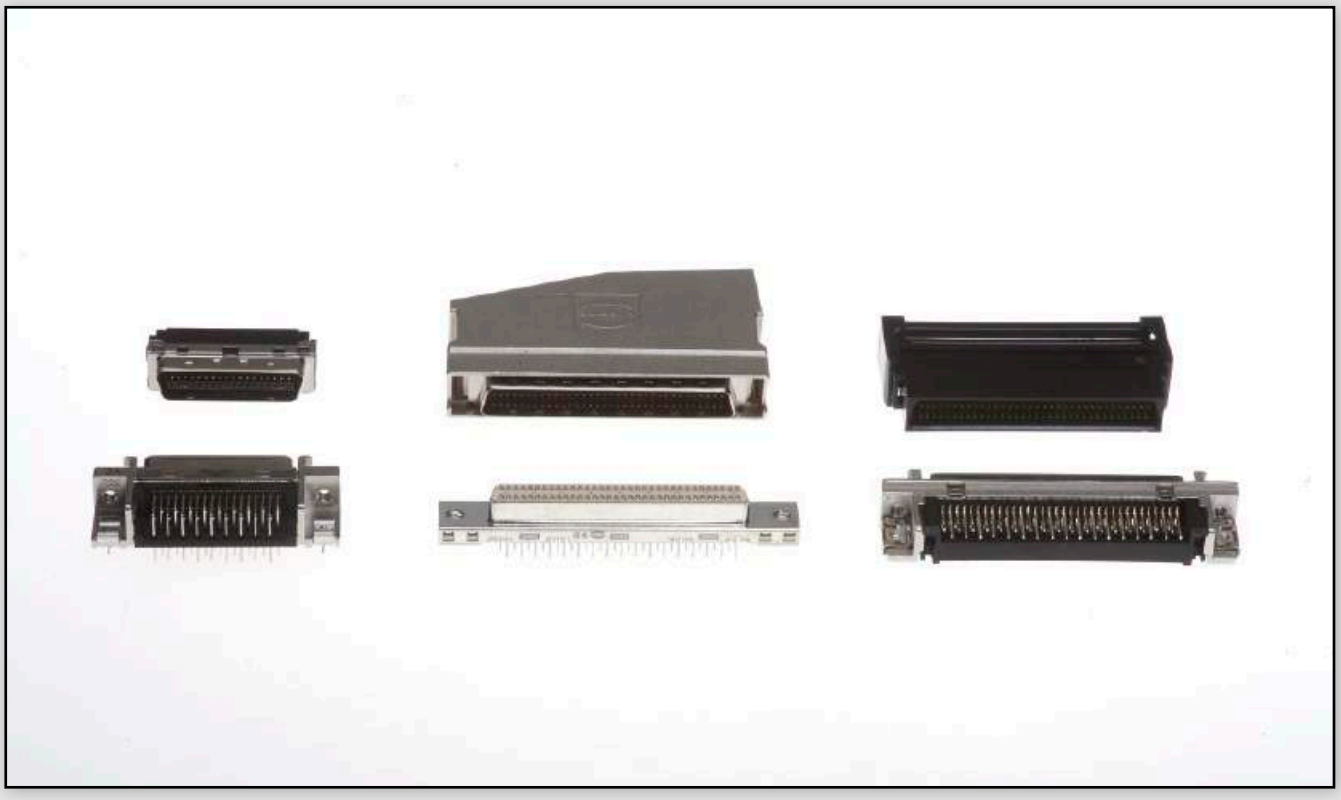

Specific features of the product range

Space saving connectors in 1.27 mm pitch

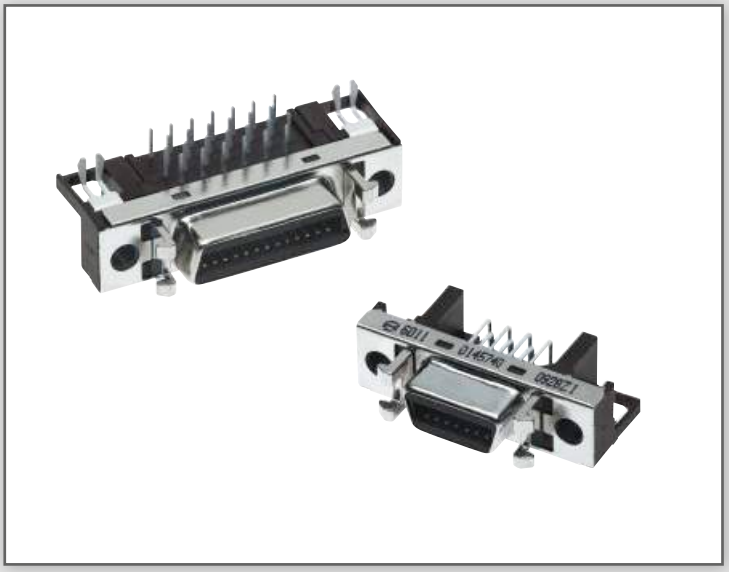

IDC cable connectors for round discrete wire cables and flat cables

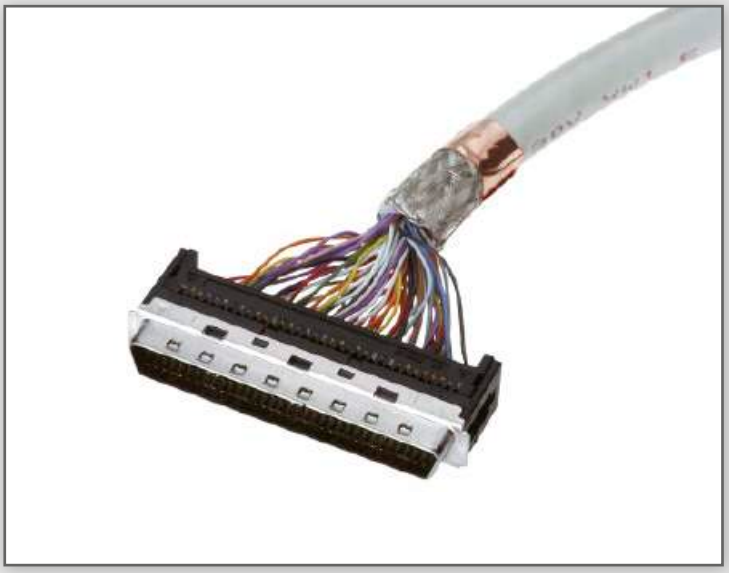

Two contact styles

- Pin and socket
- Bellows

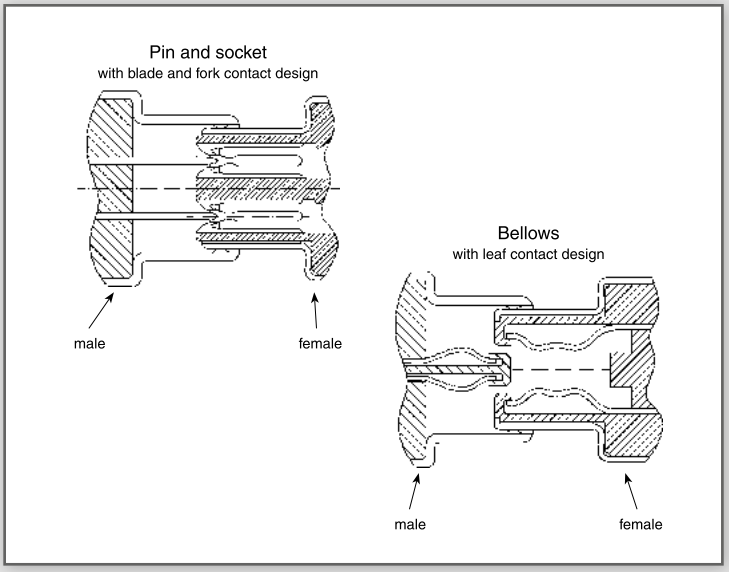

for economical and reliable connections

A comprehensive range of high density interface connectors based on two mating design concepts:

– Blade and fork contact in the Pin/ Socket range.

– Leaf contact in the Bellows range.

Available in a various number of contacts with options for secure locking of mated connectors in accordance with the following international standards:

- Small Computer System Interface
  SCSI-2
  SCSI-2 wide
  SCSI-3
- Intelligent Peripheral Interface
  IPI
- High Performance Peripheral Interface
  HIPPI
- High Speed Serial Interface
  HSSI
- Media Independent Interface
  MII
- Bi-directional Parallel Interface
  IEEE – 1284-C
- EIA – TIA
  232-E
- IEC
  61 076-3-100
  for bellows connectors
- IEC
  61 076-3-101
  for pin and socket connectors
- Internal Bus extension through “Daisy chain” inter-linking via 0.635 mm pitch flat cable. The 4-point design of the IDC contact provides accurate and reliable termination even with teflon cable.

UL recognised

For customer specific applications we can design and manufacture solutions to match your requirement.

Sales department
HARTING components

Certified according to EN ISO 9001 in design/development, production, installation and servicing

Bellows
with leaf contact design

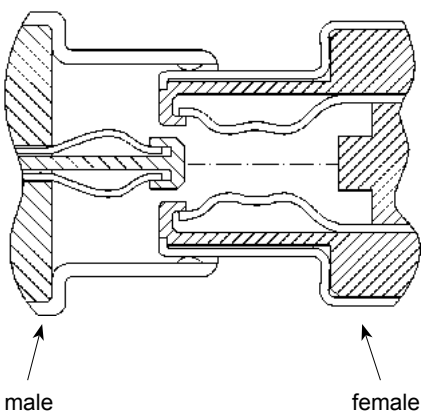

Pin and socket
with blade and fork contact design

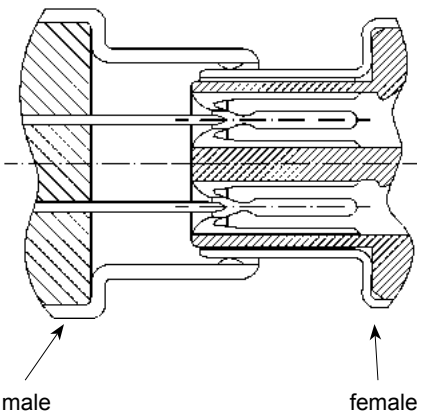

Notes

I/O connectors

Number of contacts	20, 26, 50, 68, 100
Pitch	1.27 mm
Working current Flat cable connector	1 A 0.5 A
Working voltage Flat cable connector	240 V ~ 100 V ~
Test voltage $U_{r.m.s.}$ Flat cable connector	750 V 500 V
Contact resistance	≤ 30 mΩ
Insulation resistance	≥ 10^3 MΩ
Temperature range	-55 °C … +105 °C
during SMC reflow soldering	max. 240 °C for 60 s (only for SMC compatible connectors)

Terminations

Solder pins	Straight for pcb holes min. Ø 0.74 mm Angled 90° for pcb holes min. Ø 0.74 mm
Insulation displacement	Discrete wire AWG 28 to AWG 30 max. section: 0.089 mm² min. section: 0.050 mm² Insulation Ø min. 0.50 mm Ø max. 0.90 mm Flat cable AWG 30 pitch 0.635 mm

Materials

Moulding	Thermoplastic resin glass-fibre filled UL 94-V0
Contacts Flat cable connector	Copper alloy Nickel

Contact surface

Contact zone	S4 = 0.76 µm (30 µinch) Au or PdNi equivalent
Metal shell	Die cast zamac or stamped steel, nickel-plated

Press-in versions

Insertion process	Flat rock
Maximum press-in force per contact	100 N
Minimum push out force per contact	15 N
Number of repairs	2
Diameter of pcb plated through holes	Ø $0.6^{+0.07}_{-0.05}$ mm
Recommended pcb holes for press-in process	Hole : Ø 0.71 – 0.74 mm Cu : 30 – 60 µm Sn : 5 – 20 µm
Pcb thickness	1.6 – 3.2 mm

Pin and socket
with blade and fork contact design

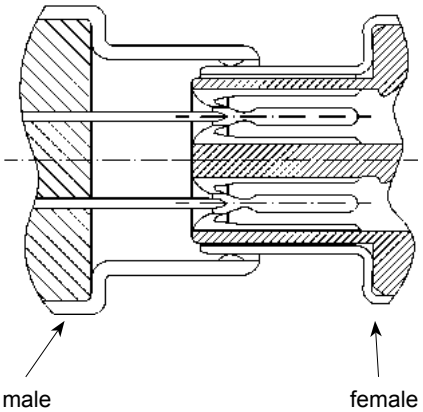

Number of contacts

20–68

Female connectors, straight

Identification	No. of contacts	Part number
Female connectors with straight solder pins	20	60 01 020 5102
	26	60 01 026 5102
	50	60 01 050 5102
	68	60 01 068 5102

Dimensions

	a	$b_{\pm 0.1}$	c	e	f	g	h
20	33.40	27.43	15.60	9 x 1.27 = 11.43	23.24	23.70	27.45
26	37.21	31.24	19.41	12 x 1.27 = 15.24	27.05	27.50	31.25
50	52.45	46.48	34.65	24 x 1.27 = 30.48	42.29	42.80	46.50
68	63.88	57.91	46.08	33 x 1.27 = 41.91	53.72	54.20	57.90

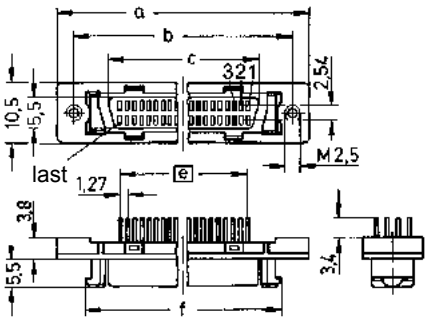

Board drillings

26, 50 contacts

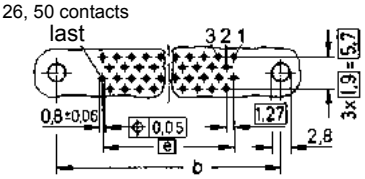

20, 68 contacts

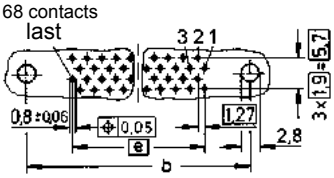

Panel cut out

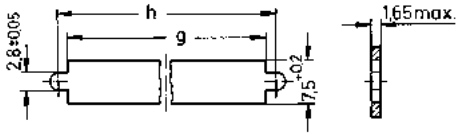

Dimensions in mm

Number of contacts

68

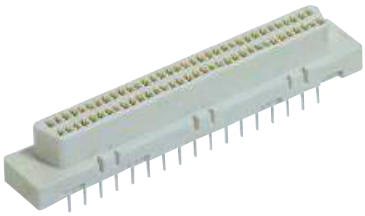

Female connectors, straight

Identification	No. of contacts	Part number	
		with shielding	without shielding
SMC female connector with straight solder pins	68	60 02 068 5120	60 05 068 5100
Female connector with straight press-in pins	68	60 02 068 5322	60 05 068 5322

Dimensions

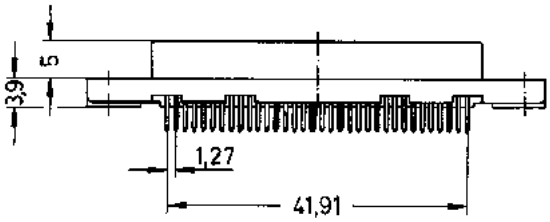

SMC solder

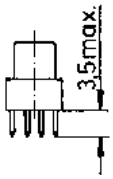

press-in

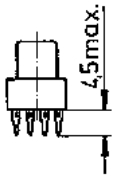

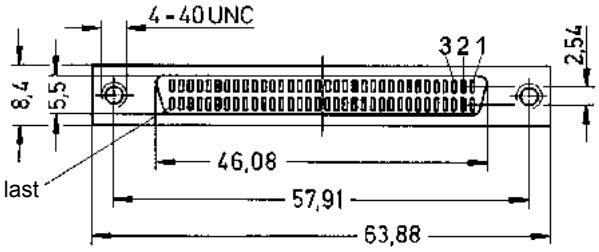

Board drillings
(Components side)

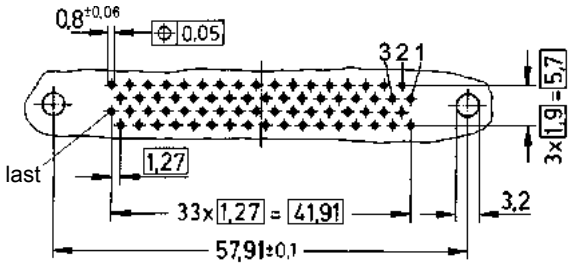

SMC solder

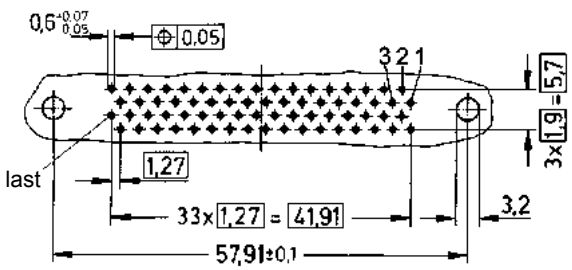

press-in

Dimensions in mm

Number of contacts

20–68

Female connectors, angled

Identification	No. of contacts	Part number
Female connectors with angled solder pins		
	20	60 01 020 51 . .
	26	60 01 026 51 . .
	50	60 01 050 51 . .
	68	60 01 068 51 . .

Panel fixing	Board fixing	
M 2.5	M 2.5	32
M 2.5	Board lock	40

Dimensions

	a	$b_{\pm 0.1}$	c	e	f	g	h
20	33.40	27.40	15.60	9 x 1.27 = 11.43	23.24	23.70	27.45
26	37.21	31.24	19.41	12 x 1.27 = 15.24	27.05	27.50	31.25
50	52.45	46.45	34.65	24 x 1.27 = 30.48	42.29	42.80	46.50
68	63.88	57.88	46.08	33 x 1.27 = 41.91	53.72	54.20	57.90

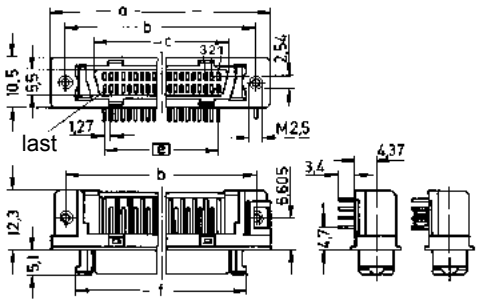

without board lock with board lock

Board drillings

26, 50 contacts

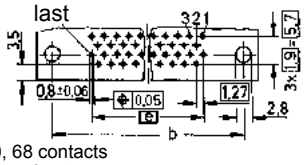

20, 68 contacts

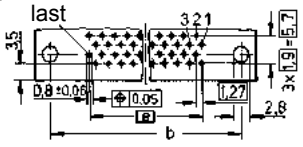

Panel cut out

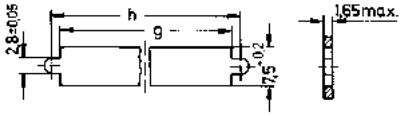

Dimensions in mm

Number of contacts

68–100

Female connectors, angled

Identification		No. of contacts	Part number
Female connectors with angled solder pins		68	60 02 068 51 . .
		100	60 02 100 51 . .
With female screw lock	41		
Without female screw lock	50		

Dimensions

without screw lock with screw lock

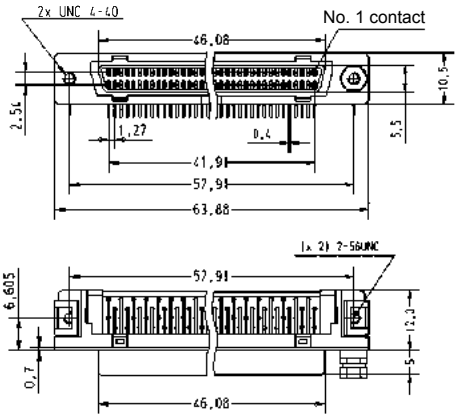

without screw lock

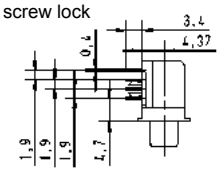

with screw lock

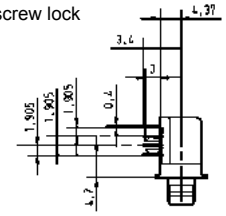

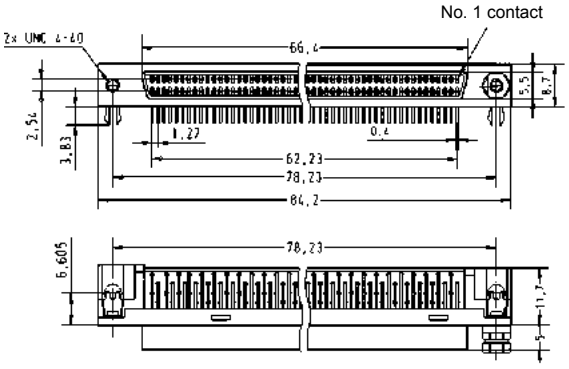

without screw lock

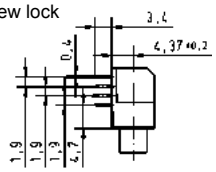

with screw lock

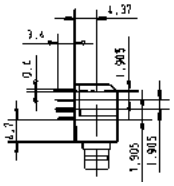

Board drillings
(Components side)

68 contacts, 100 contacts

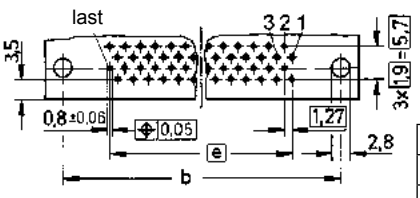

	a_1	b	c	e
68	54.22	57.91	4.4	33 x 1.27 = 41.91
100	74.53	78.23	2.8	49 x 1.27 = 62.23

Panel cut out

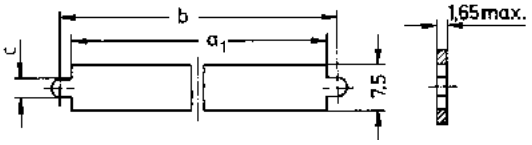

Dimensions in mm

Number of contacts

50–68

Female connectors for IDC flat cable, straight

Identification	No. of contacts	Part number	
		with latch system	with screw lock system
Female panel connectors with insulation displacement termination for IDC flat cable pitch 0.635 mm AWG 30	50 68	60 04 050 5343 60 04 068 5343	60 04 050 5344 60 04 068 5344

Dimensions for connectors
with latch system

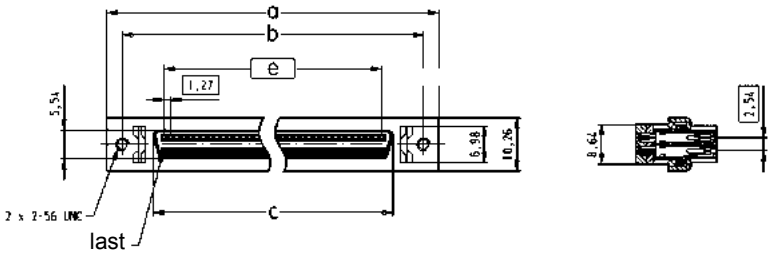

Panel cut out

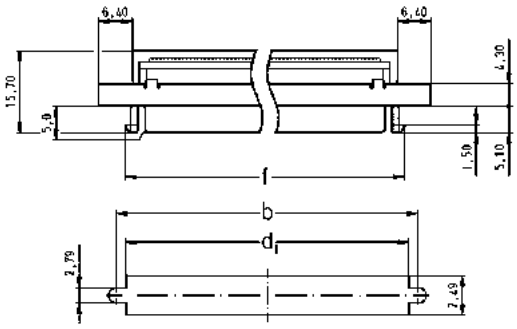

	a	b	c	d_1	d_2	e	f
50	52.45	46.48	34.70	42.80	42.30	30.48	42.30
68	63.88	57.91	46.13	54.23	53.72	41.91	53.72

Dimensions for connectors
with screw lock system

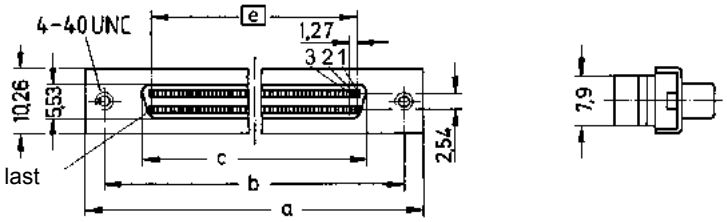

Panel cut out

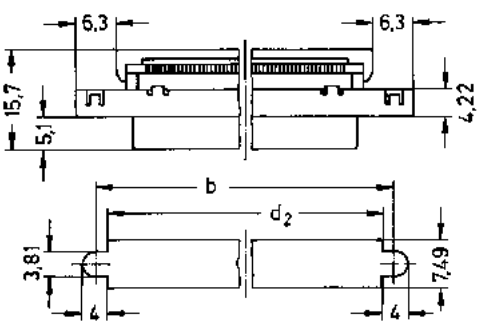

Dimensions in mm

Tooling see chapter 20
Cables see pages 06.26 ff

Number of contacts

50–68

Connectors with IDC termination

Identification	No. of contacts	Part number	
		Male connector	Strain relief
Male connectors with insulation displacement termination for IDC flat cable pitch 0.635 mm AWG 30 Strain relief order separately	50 68	60 06 050 5440 60 06 068 5440	60 06 050 9001 60 06 068 9001

Dimensions

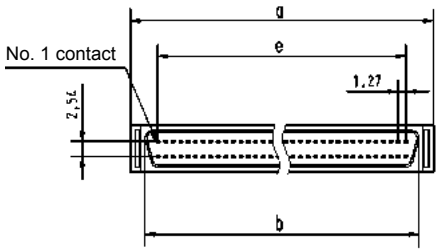

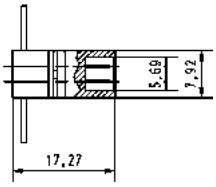

	a	b	c	e
50	39.75	34.85	36.19	30.48
68	51.26	46.28	47.62	41.91

Strain relief

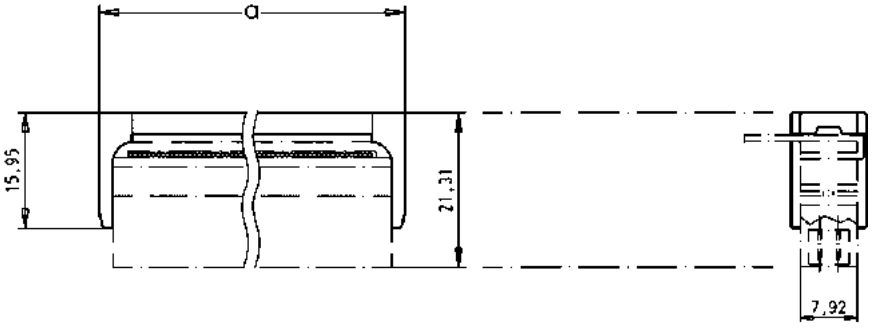

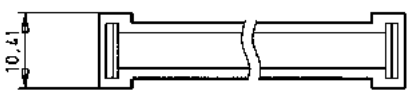

	a
50	42.16
68	53.44

Dimensions in mm

Tooling see chapter 20
Cables see pages 06.26 ff

Number of contacts

20–100

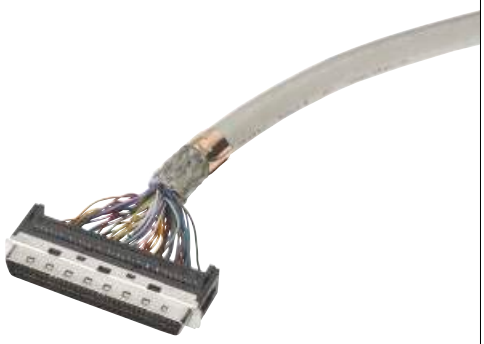

Male connectors for IDC discrete wire, straight

Identification		No. of contacts	Part number
Male connectors with insulation displacement termination			
for discrete wire AWG 28/30		20	60 03 020 52 . .
		26	60 03 026 52 . .
		50	60 03 050 52 . .
		68	60 03 068 52 . .
		100	60 03 100 52 . .
Insulation diameter (mm)			
Ø = 0.50–0.65	00		
Ø = 0.50–0.75	05		
Ø = 0.65–0.80	10		
Ø = 0.75–0.90	15		
Ø = 0.80–0.88	20		

A manual for the *har-mik*® connector and cable assembly is available on demand. Please contact your local HARTING representative.

Available sizes

	Part number	Ø	20	26	50	68	100
Male	60 03 . . . 5200	0.50–0.65	●	●	●		
	60 03 . . . 5205	0.50–0.75				●	
	60 03 . . . 5210	0.65–0.80	●		●		●
	60 03 . . . 5215	0.75–0.90				●	
	60 03 . . . 5220	0.80–0.88	●	●	●		

● = Available sizes

Dimensions

20 / 26 / 50 / 100 contacts

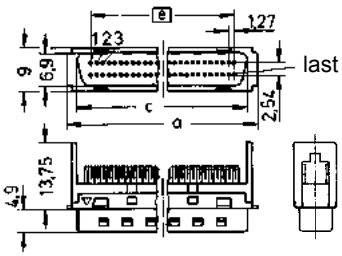

68 contacts

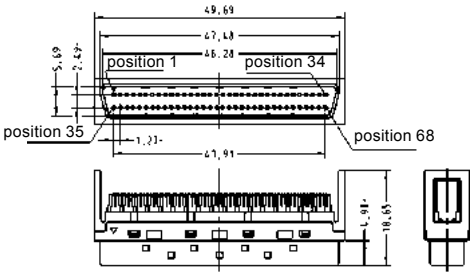

	a	c	d	e
20	21.25	17.00	16.75	11.43
26	25.06	20.81	20.56	15.24
50	40.30	36.05	35.80	30.48
100	72.05	67.80	67.55	62.23

Comb cover

(delivered with connectors)

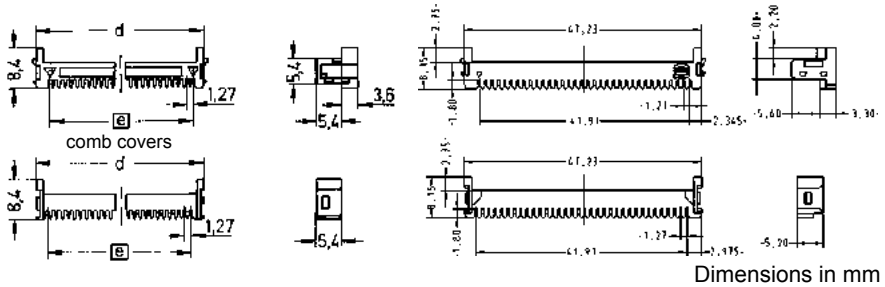

Dimensions in mm

Hoods see pages 06.21, 06.22
Tooling see chapter 20
Cables see pages 06.26 ff

Notes

Number of contacts	14, 20, 26, 36, 50, 68
Pitch	1.27 mm
Working current	1 A
Working voltage	240 V ~
Test voltage $U_{r.m.s.}$	750 V (standard) 500 V (SMC)
Contact resistance	≤ 40 mΩ (standard) ≤ 45 mΩ (SMC)
Insulation resistance	≥ 10^3 MΩ
Temperature range during SMC reflow soldering	-55 °C … +105 °C max. 240 °C for 60 s
Terminations	
Solder pins	Straight for pcb holes min. Ø 0.74 mm Angled 90° for pcb holes min. Ø 0.74 mm (wave soldering) min. Ø 0.62 mm (SMC)
Insulation displacement	AWG 28 to AWG 30 max. section: 0.089 mm² min. section: 0.050 mm² Insulation Ø min. 0.50 mm Ø max. 0.90 mm
Materials	
Moulding	Thermoplastic resin glass-fibre filled UL 94-V0
Contacts	Copper alloy
Contact surface	
Contact zone	S4 = 0.76 µm (30 µinch) Au or PdNi equivalent
Metal shell	Die cast zamac or stamped steel, nickel-plated

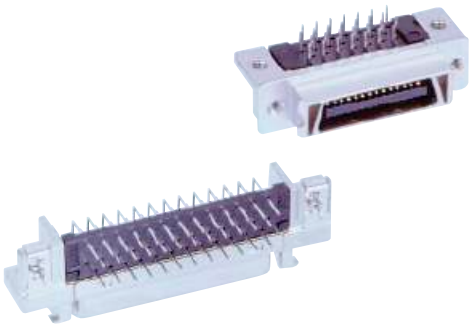

Bellows
with leaf contact design

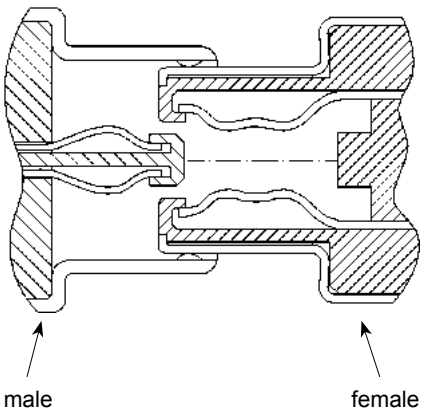

Number of contacts

20–68

Female connectors, straight

Identification	No. of contacts	Part number
Female connectors with straight solder pins	20	60 11 020 5102
	26	60 11 026 5102
	36	60 11 036 5102
	50	60 11 050 5102
	68	60 11 068 5102

Dimensions

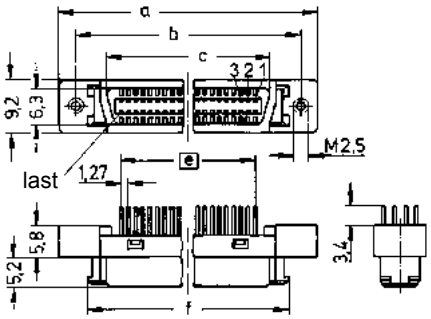

Board drillings

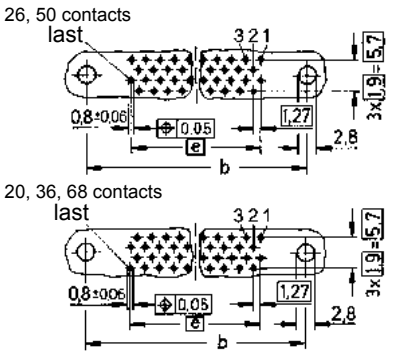

	a	$b_{\pm 0.1}$	c	e	f	g	h
20	33.35	27.45	16.45	9 x 1.27 = 11.43	23.30	23.70	27.45
26	37.16	31.26	20.26	12 x 1.27 = 15.24	27.11	27.50	31.25
36	43.51	37.61	26.61	17 x 1.27 = 21.59	33.46	33.90	37.60
50	52.40	46.50	35.50	24 x 1.27 = 30.48	42.35	42.80	46.50
68	63.83	57.93	46.93	33 x 1.27 = 41.91	53.78	54.20	57.90

Panel cut out

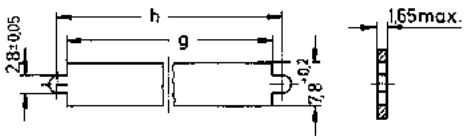

Dimensions in mm

Number of contacts

14–68

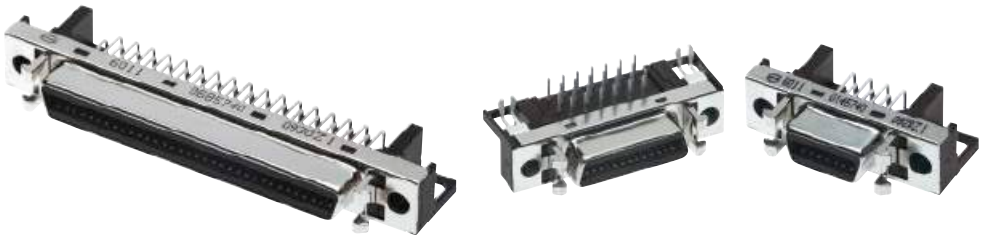

SMC female connectors, angled

Identification	No. of contacts	Part number for one reel (300 pieces)	Part number standard tray packaging
SMC female connectors with angled solder pins	14	60 11 014 57 . . 710	60 11 014 57 . .
	20	60 11 020 57 . . 710	60 11 020 57 . .
	26	60 11 026 57 . . 710	60 11 026 57 . .
	36	60 11 036 57 . . 710	60 11 036 57 . .
	50	60 11 050 57 . . 710	60 11 050 57 . .
	68	60 11 068 57 . . 710	60 11 068 57 . .
Without board lock	32		
With board lock	40		

Dimensions

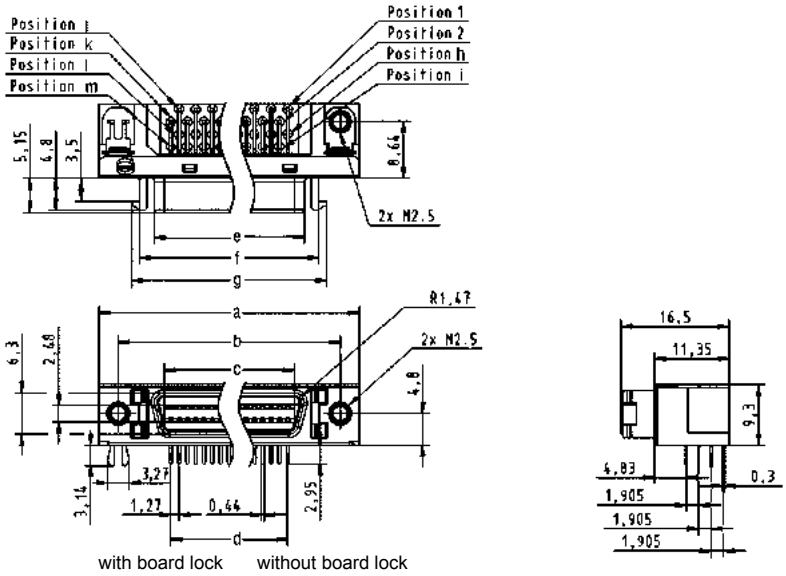

with board lock without board lock

	a	b	c	d	e	f	g	h	i	j	k	l	m	n
14	29.54	23.64	9.62	7.62	12.62	17.14	19.54	8	9	7	6	14	13	44.0
20	33.35	27.45	13.43	11.43	16.43	20.95	23.35	11	12	9	10	19	20	56.5
26	37.16	31.26	17.24	15.24	20.24	24.76	27.16	14	15	13	12	26	25	56.0
36	43.51	37.61	23.59	21.59	26.59	31.11	33.51	19	20	17	18	35	36	56.0
50	52.40	46.50	32.48	30.48	35.48	40.00	42.40	26	27	25	24	50	49	72.5
68	63.83	57.93	43.91	41.91	46.91	51.43	53.83	35	36	33	34	67	68	88.5

Board drillings

(Components side)

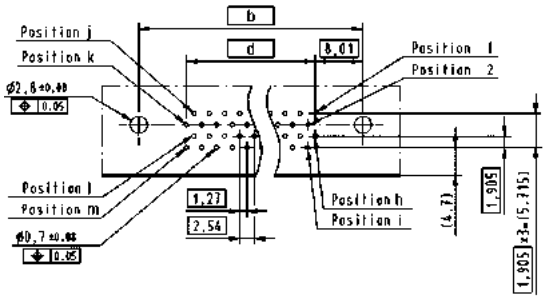

Packaging

(1 reel = 300 pieces)
Reel diameter = 380 mm

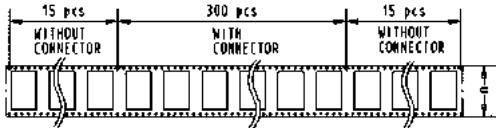

Dimensions in mm

Number of contacts

68

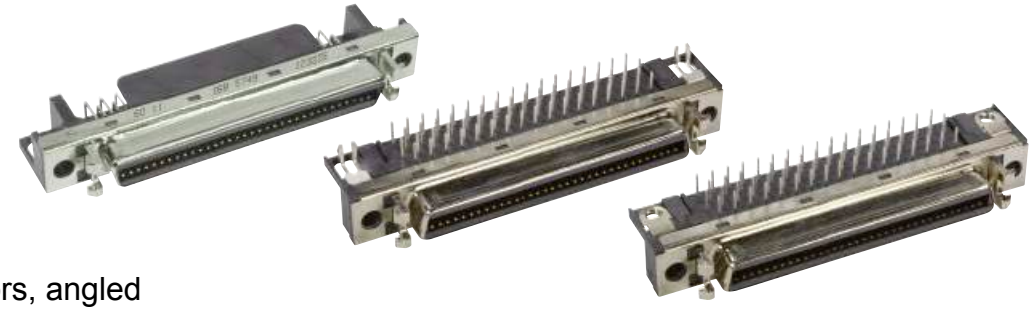

SMC female connectors, angled

Identification	No. of contacts	Part number	
		with board lock	without board lock
SMC female connectors with angled solder pins and pick & place pad	68	60 11 068 5749	60 11 068 5739

Dimensions

with board lock without board lock

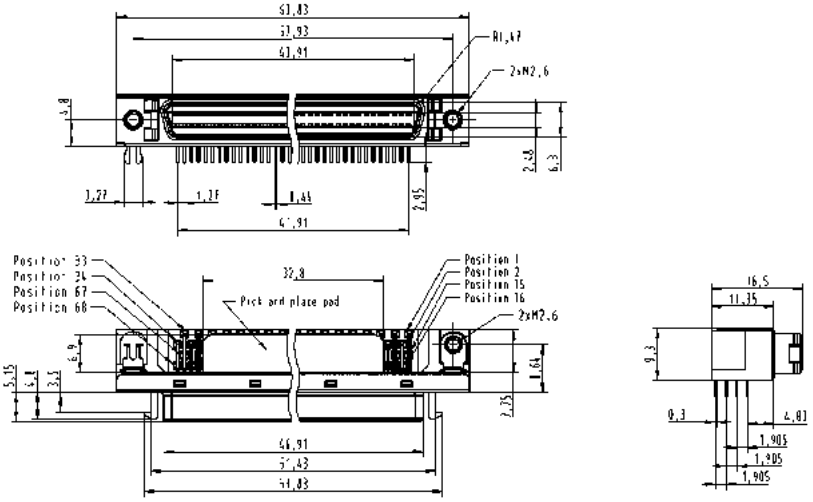

Board drillings

(Components side)

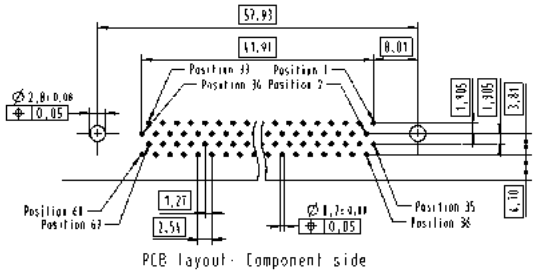

Packaging

(1 tray = 18 pieces)

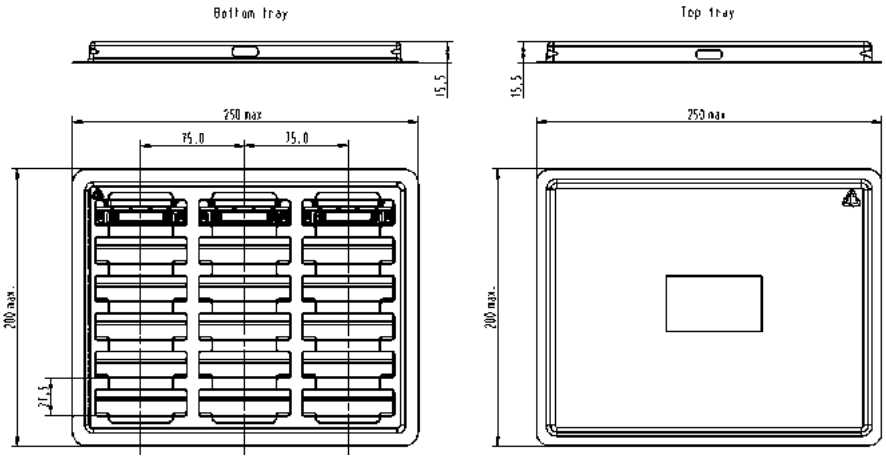

Dimensions in mm

Number of contacts

14–68

Male connectors for IDC discrete wire, straight

Identification		No. of contacts	Part number
			Male connector
Male connectors with insulation displacement termination			
for discrete wire AWG 28/30		14	60 13 014 52 . .
		20	60 13 020 52 . .
		26	60 13 026 52 . .
		36	60 13 036 52 . .
		50	60 13 050 52 . .
		68	60 13 068 52 . .
Insulation diameter (mm)			
Ø = 0.50–0.65	00		
Ø = 0.50–0.75	05		
Ø = 0.75–0.90	15		

Available sizes

	Part number	Ø	14	20	26	36	50	68
Male	60 13 . . . 5200	0.50–0.65		●			●	●
	60 13 . . . 5205	0.50–0.75	●		●	●		
	60 13 . . . 5215	0.75–0.90	●		●	●		

● = Available sizes

Dimensions for male connectors

20 / 50 / 68 poles

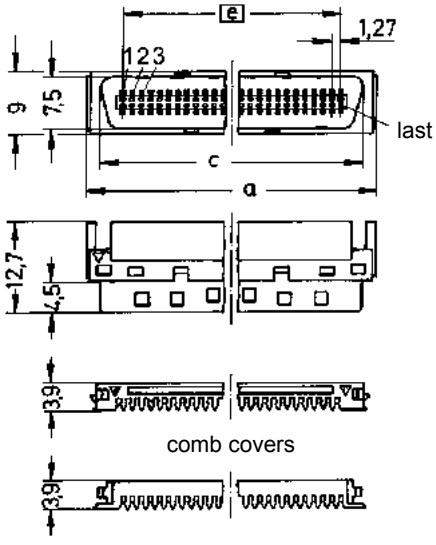

	a	c	e
20	21.24	17.55	11.43
50	40.29	36.60	30.48
68	51.72	48.03	41.91

14 / 26 / 36 poles

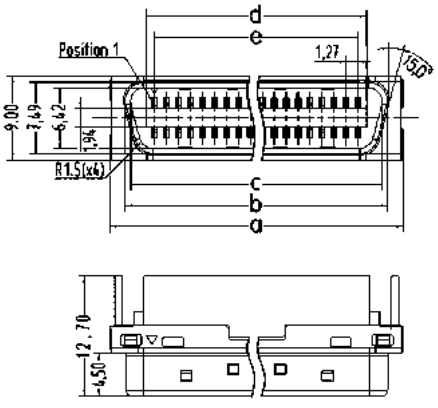

	a	b	c	d	e
14	17.10	13.84	12.78	9.42	7.62
26	24.95	21.46	20.40	17.00	15.24
36	31.35	27.81	26.75	23.39	21.59

A manual for the *har-mik*® connector and cable assembly is available on demand. Please contact your local HARTING representative.

Dimensions in mm

Hoods see page 06.23, 06.24
Tooling see chapter 20
Cables see pages 06.26 ff

Hoods for pin and socket male connectors

Number of contacts	20, 26, 36, 50, 68, 100
Surface	Die cast zamac, nickel-plated
	Thermoplastic resin, nickel-plated, steel insert

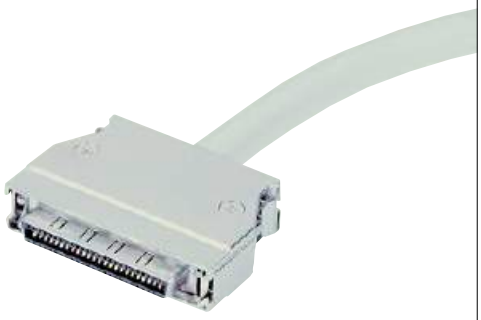

Hoods for bellows male connectors

Number of contacts	14, 20, 26, 36, 50, 68
Surface	Die cast zamac, nickel-plated
	Thermoplastic resin, nickel-plated, steel insert

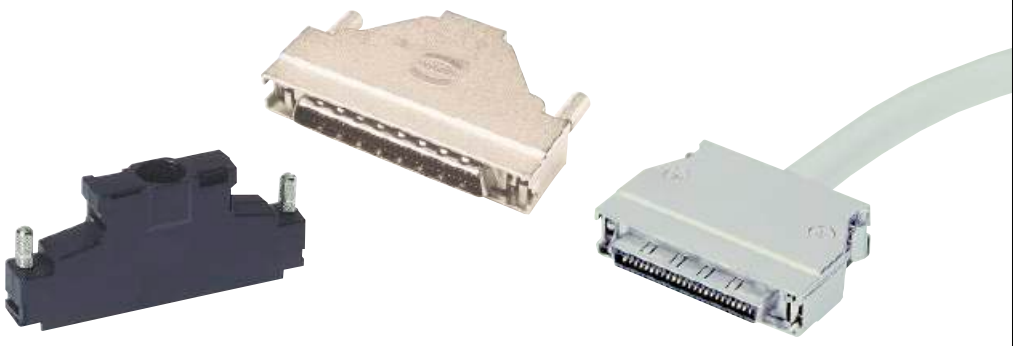

Top entry hoods

Identification	No. of contacts	Part number	Drawing	Dimensions in mm
Metal hood Large cable entry	20	60 03 020 0255	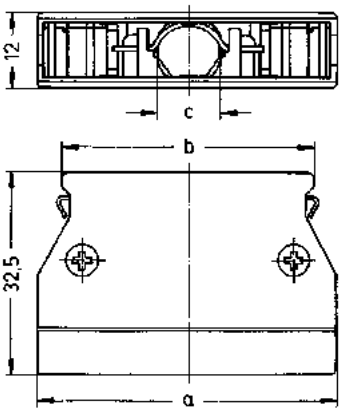	
	26	60 03 026 0255		
	36	60 03 036 0255		
	50	60 03 050 0255		
	68	60 03 068 0255		
Metal hood Top cable entry	68	60 03 068 0145	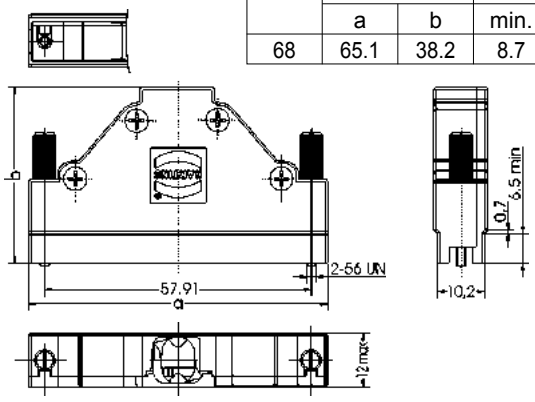	
Plastic hood **with internal screen**[1)]	50	60 03 050 0143	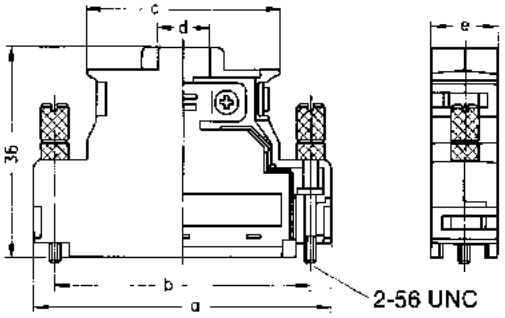	
	68	60 03 068 0143		
	100	60 03 100 0143		

	a	b	c
20	28.95	21.15	8.00 x 8.50
26	32.76	24.96	8.00 x 6.75
36	39.11	31.31	9.00 x 10.00
50	48.00	40.20	9.00 x 10.00
68	59.43	51.63	9.00 x 10.00

	Shell dimensions		Cable dimensions	
	a	b	min.	max.
68	65.1	38.2	8.7	10.7

	a	b	c	d	e
50	54.00	46.48	35.00	10.50	12.00
68	65.41	57.91	38.40	14.00	12.00
100	85.73	78.23	42.00	13.00	12.00

For other size, please consult us.

[1)] Temperature range: -55 °C … +60 °C

Side entry hoods

Identification	No. of contacts	Part number	Drawing	Dimensions in mm
Metal hood Cable side entry	20	60 03 020 0555	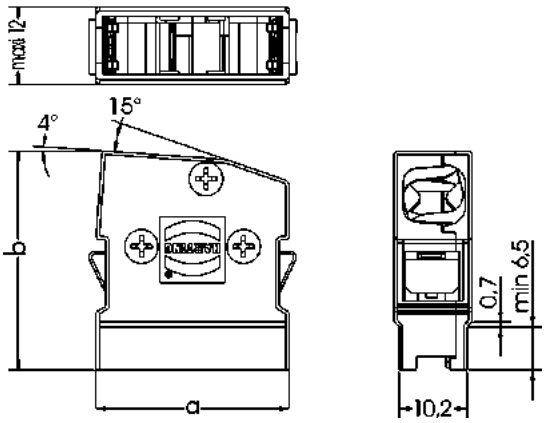	
	26	60 03 026 0555		
	50	60 03 050 0555		
	68	60 03 068 0555		

	Shell dimensions		Cable dimensions	
	a	b	min.	max.
20	29.0	32.9	6.2	8.0
26	32.8	32.9	6.5	8.5
50	48.0	35.6	8.3	10.3
68	59.4	35.6	8.7	10.7

Large cable side entry	68	60 03 068 0655	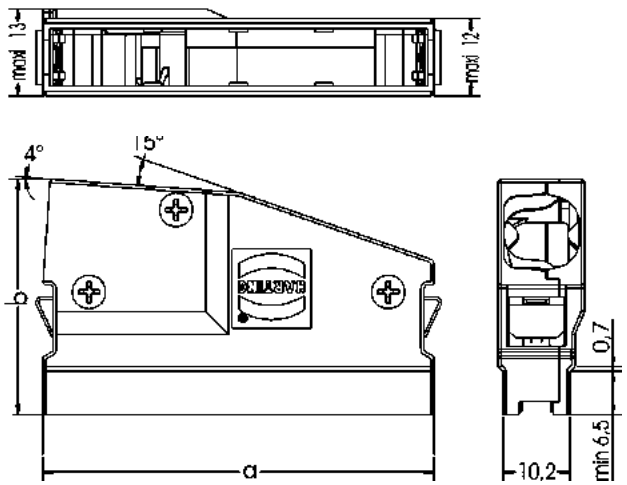	

	Shell dimensions		Cable dimensions	
	a	b	min.	max.
68	59.4	35.6	10.0	12.0

Top or side entry hoods

Identification	No. of contacts	Part number	Drawing	Dimensions in mm
Plastic hood with internal screen	14	60 13 014 0153 351[1)]	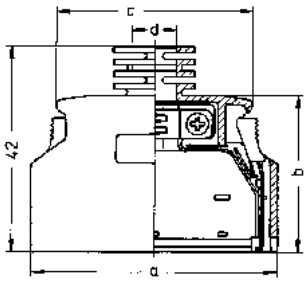	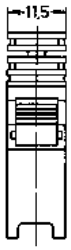
	20	60 13 020 0153[2)]		
	26	60 13 026 0153 351[1)]		
	36	60 13 036 0153 351[1)]		
	50	60 13 050 0153[2)]		
	68	60 13 068 0153[2)]		

	a	b	c	d
20	29.65	34.50	19.95	6.80
50	48.70	32.00	39.00	8.70
68	60.13	32.00	50.43	9.10

20 / 50 / 68 poles

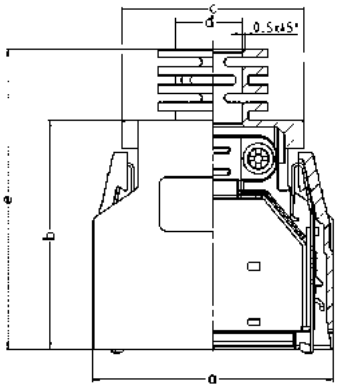

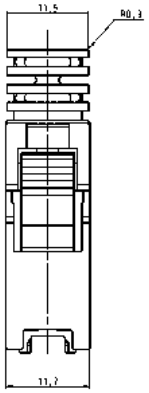

	a	b	c	d	e
14	26.00	36.00	21.00	7.20	42.50
26	33.70	32.00	25.50	8.00	42.00
36	40.05	32.00	31.80	9.20	42.00

14 / 26 / 36 poles

Metal hood Cable side entry Only compatible with IDC connectors 60 13 026 5205 and 60 13 026 5215			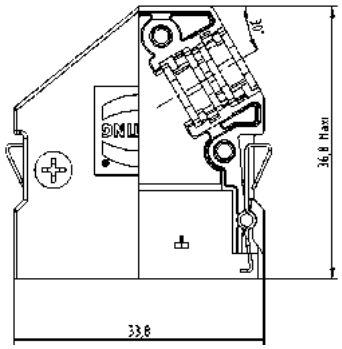	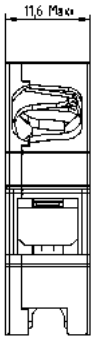
Packaging unit 1 piece	26	60 13 026 0555		
Packaging unit 500 pieces	26	60 13 026 0555 580		

Valid for cable Ø	
Min.	Max.
6.5	8.5

[1)] Temperature range: - 55 °C ... + 85 °C
[2)] Temperature range: - 55 °C ... + 60 °C

Top entry hoods

Identification	No. of contacts	Part number	Drawing	Dimensions in mm
Plastic hood with internal screen and knurled screws				
Colour: Beige	14	60 13 014 0146 351[1)]		
	26	60 13 026 0146 351[1)]		
	36	60 13 036 0146 351[1)]		
Colour: Black	14	60 13 014 0146 110[1)]		
	26	60 13 026 0146 110[1)]		
	36	60 13 036 0146 110[1)]		

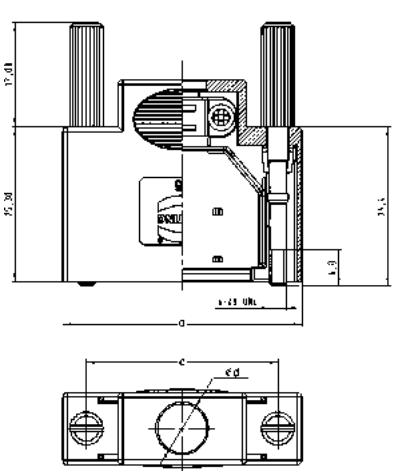

	a	b	c	d
14	31.40	37.00	23.64	7.2
26	39.00	33.00	31.26	8.0
36	45.40	33.00	37.61	9.2

[1)] Temperature range: - 55 °C ... + 85 °C

Female screw lock

Identification	Part number	Drawing	Dimensions in mm
Screw lock Thread: 4-40 UNC / M 2.5 Height: 4.6 mm	60 01 000 9030	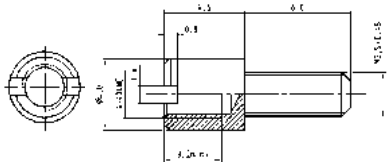	
Screw lock Thread: 2-56 UNC / M 2.5 Height: 2.9 mm	60 01 000 9013	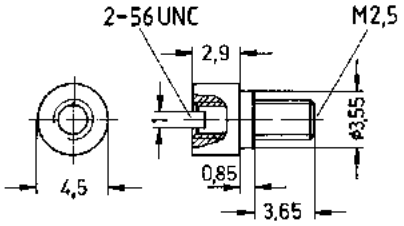	
Screw lock Thread: 4-40 UNC / 4-40 UNC Height: 3.99 mm	60 01 000 9018	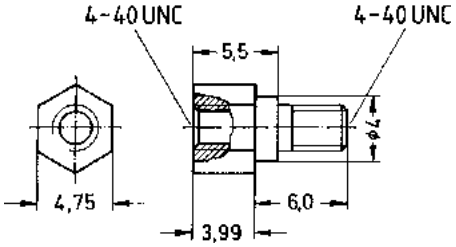	
Screw lock Thread: 2-56 UNC / 4-40 UNC Height: 3.99 mm	60 01 000 9019	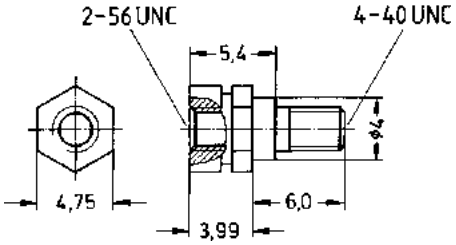	
Screw lock Thread: 2-56 UNC / 4-40 UNC Height: 5.5 mm	60 01 000 9020	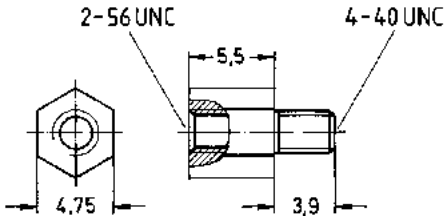	
Screw lock Thread: 4-40 UNC / 4-40 UNC Height: 5.5 mm	60 01 000 9021	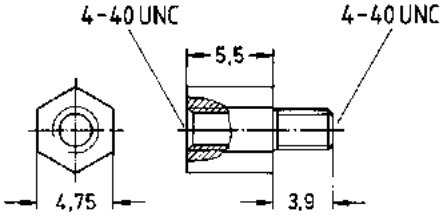	

Cable assemblies

Identification	Part number	Drawing	Dimensions in mm
Cable assembly *har-mik*® pin and socket, 68-pole Hood: metal hood with top entry Cable: 34 twisted pairs, AWG 28, shielded, PVC Wiring: 1:1		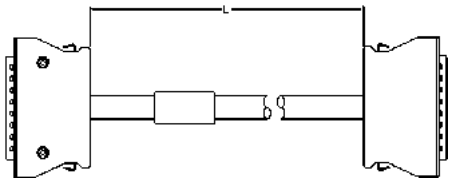	
Length: L = 0.5 m	33 60 214 5000 102		
L = 1.0 m	33 60 213 1000 103		
L = 2.0 m	33 60 213 2000 104		
L = 5.0 m	33 60 213 5000 105		
L = 10.0 m	33 60 212 1000 106		
L = 15.0 m	33 60 212 1500 107		
L = 20.0 m	33 60 212 2000 108		
Cable assembly *har-mik*® bellows, 36-pole Hood: shielded plastic hood with top entry Cable: 18 twisted pairs, AWG 28, shielded, PVC Wiring: 1:1		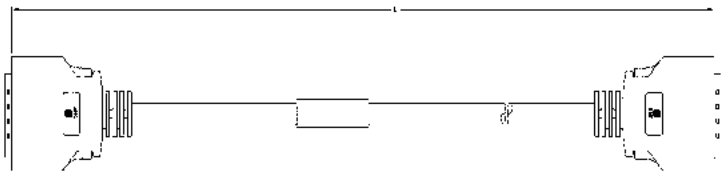	
Length: L = 0.5 m	33 60 214 5000 088		
L = 1.0 m	33 60 211 0010 089		
L = 2.0 m	33 60 211 0020 090		
L = 5.0 m	33 60 211 0050 091		
L = 10.0 m	33 60 211 0100 092		
L = 15.0 m	33 60 211 0150 093		
L = 20.0 m	33 60 211 0200 094		

Cable assemblies

Identification	Part number	Drawing	Dimensions in mm
Cable assembly *har-mik*® bellows, 36-pole, male Hood: overmoulded with top entry Cable: 18 twisted pairs, AWG 28, shielded, PVC Wiring: 1:1		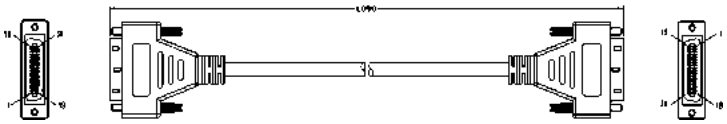	
Length: L = 0.5 m	33 60 224 5000 191		
L = 1.0 m	33 60 223 1000 192		
L = 1.5 m	33 60 223 1500 193		
L = 2.0 m	33 60 223 2000 194		
L = 5.0 m	33 60 223 5000 195		
Cable assembly *har-mik*® bellows, 26-pole, male Hood: overmoulded with top entry Cable: 13 twisted pairs, AWG 28, shielded, PVC Wiring: 1:1		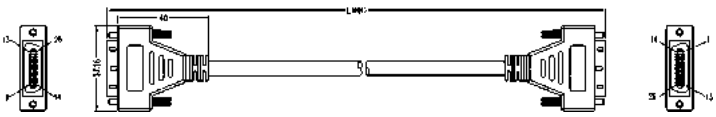	
Length: L = 0.5 m	33 60 224 5000 180		
L = 1.0 m	33 60 223 1000 181		
L = 1.5 m	33 60 223 1500 182		
L = 2.0 m	33 60 223 2000 183		
L = 5.0 m	33 60 223 5000 184		
Cable assembly *har-mik*® bellows, 14-pole, male Hood: overmoulded with top entry Cable: 7 twisted pairs, AWG 28, shielded, PVC Wiring: 1:1		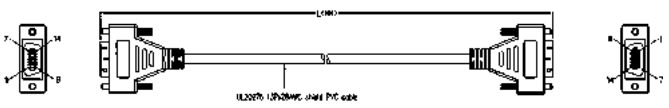	
Length: L = 0.5 m	33 60 224 5000 186		
L = 1.0 m	33 60 223 1000 187		
L = 1.5 m	33 60 223 1500 188		
L = 2.0 m	33 60 223 2000 189		
L = 5.0 m	33 60 223 5000 190		

Cables for insulation displacement termination

Identification	No. of pairs	Part number Standard version	 *Halogen free version with screened pairs*
Twisted pair cable with braid shield AWG 28 *AWG 30* Length per reel: 100 m	5	60 90 005 6010	*60 90 005 6009*
	10	60 90 010 6010	
	13	60 90 013 6010	
	18	60 90 018 6010	
	25	60 90 025 6010	
	34	60 90 034 6010	
	50	60 90 050 6010	

Drawing

No. of pairs	Outside diameter Nominal
5	5.4
10	6.6
13	6.8
18	7.5
25	8.5
34	8.9
50	11.1

No. of pairs	*Outside diameter*
5	*5.5 ± 0.3*

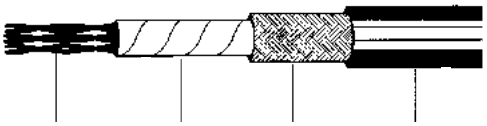

Twisted pair
Screened twisted pairs

Separator

Shield

Jacket PVC
Jacket FRNC

Dimensions in mm

Technical characteristics

	Standard version	*Halogen free version with screened pairs*
Number of pairs	5, 10, 13, 18, 25, 34, 50	*5*
Voltage rating	30 V (style UL 2789)	*100 V*
Maximum conductor resistance (20 °C)	233 Ω/km	*350 Ω/km*
Minimum insulation resistance (20 °C)	1 MΩ/km	*10 GΩ/km*
Nominal differential impedance (TDR)	85 Ω	*95 Ω ± 5 Ω*
Nominal differential capacitance (1 kHz)	110 pF/m	*45 pF/m*
Propagation velocity	55 %	
Temperature range	– 20 °C … +105 °C	*– 25 °C … + 80 °C*
Cable materials		
Conductor	7 x 0.13 mm stranded tinned copper	*7 x 0.1 mm stranded tinned copper*
Insulation (except 50 pairs) (for 50 pairs)	PVC Ø 0.62 mm PVC Ø 0.67 mm	*Polypropylene Ø 0.74 mm*
Shield	Tinned copper braid, covering ≥ 80 %	*Tinned copper braid, covering ≥ 65 %*
Jacket	PVC	*FRNC*
Flammability rating	Flame tested as per UL style 2789	
Sheath marking	AWM 2789 60°C 30V	*AWM 21283 80°C 30V VW1*

Thin print: Standard version
Italic print: Halogen free version

Cables for insulation displacement termination

Identification	No. of wires	Part number
Flat cable for IDC connector Pitch 0.635 mm AWG 30		
Length per reel: 100 ft 30.48 m	50 68	60 90 050 6008 60 90 068 6008

Drawing

Dimensions in mm

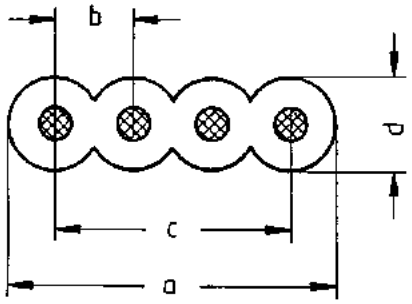

	a ± 0.25	b ± 0.05	c ± 0.2	d ± 0.05
50	31.75	0.635	31.12	0.68
68	43.20	0.635	42.55	0.68

The tolerance b is not cumulative

Technical characteristics

Number of wires	50, 68
Voltage rating	150 V
Current rating	1.5 A max. per conductor
Impedance	75 Ω
Nominal differential capacitance (1 kHz)	90 pF/m
Pitch	0.635 mm
UL style	2678
Temperature range	– 30 °C … +105 °C
Materials	
Conductor	7 x 0.102 mm regular tinning or Z-bonding AWG 30
Insulation	PVC

07. *har-link*® Interface Connectors

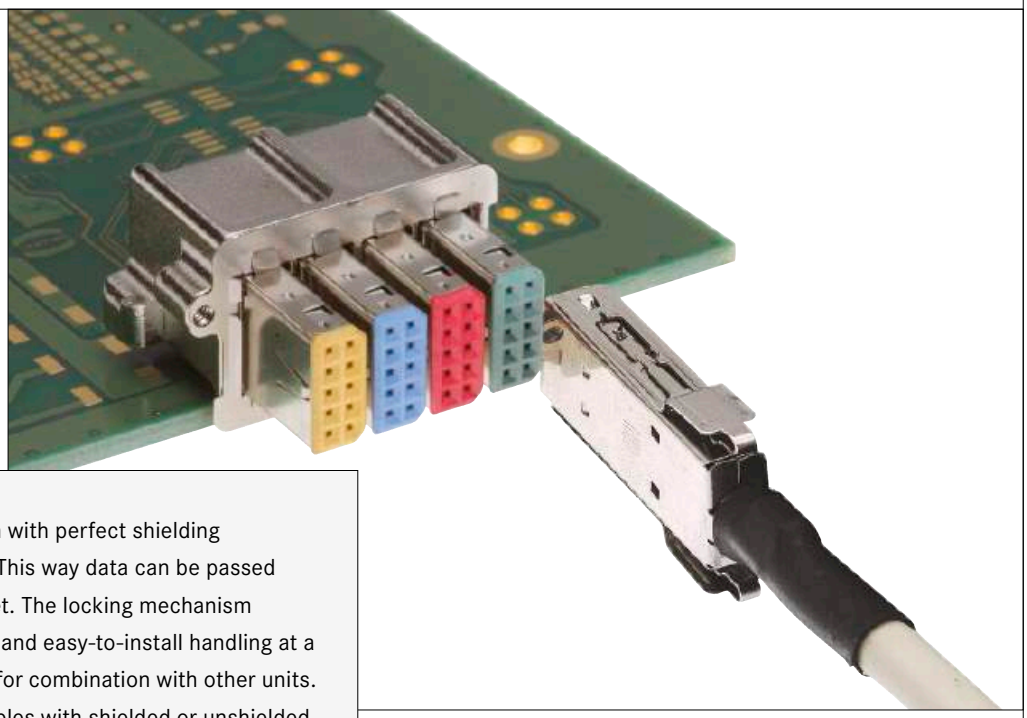

The highest data rates in combination with perfect shielding characterize the *har-link*® connector. This way data can be passed on optimally within the control cabinet. The locking mechanism ensures a vibration-proof connection and easy-to-install handling at a minimum size and maximum options for combination with other units. HARTING offers assembled system cables with shielded or unshielded twisted pairs for the *har-link*® connector family.

Application profile:

CONNECTION TYPE		ENVIRONMENT		APPLICATION						
Board to Board	Cable/ Wire to Board	IP20	IP65 / IP67	Data	Signal	Power	high performance			
							Data transfer rate	Shielding	Number of contacts, contact density	Voltage, working current
	●	●		●			●	●	●	

Cable termination

Han-Quick Lock®

IDC

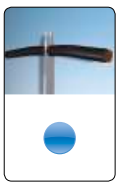

●

Crimp

Screw

Cage clamp

Axial screw

PCB termination

THT

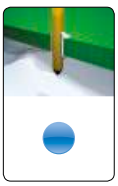

●

SMC

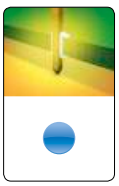

●

SMT

Press-in

Application standard

Housing integration

Separate housing

●

Integrated housing

●

Contents

	Page
har-link® connector system – introduction	**07.02**
har-link® connector system – general information	**07.04**
Technical characteristics	**07.05**
Male and female connectors	**07.06**
Accessories and cable assemblies	**07.07**

METRIC *har-link*® INTERFACE CONNECTORS IN 2.0 mm PITCH

HARTING's modular interface connector system, *har-link*® in 2.0 mm pitch, allows data transfer rates up to 2 Gbit/s.
The *har-link*® connector system of HARTING complies with the requirements of IEC 61076-4-107 and is a compact and robust PCB-to-cable interface with excellent data transmission properties.
All dimensions of the *har-link*® connector are in accordance with IEC 917 and IEEE P 1301 specifications, allowing an easy implementation into both metric and inch-based systems.
har-link® also supports hot plugging as required by modern bus systems such as CompactPCI, S-bus and VME.

har-link® allows data transmission up to 2 Gbit/s per pair and is therefore perfectly suited for modern transmission protocols such as Low Voltage Differential Signals (LVDS).
The thorough EMI shielding of the *har-link*® connector is a guarantee of its superior performance in the EMI-polluted environment.
The high temperature resistant material of the female *har-link*® connector supports reflow soldering.
In addition, HARTING provides cable assemblies. A crimping tool range for terminating male *har-link*® connectors is also available.

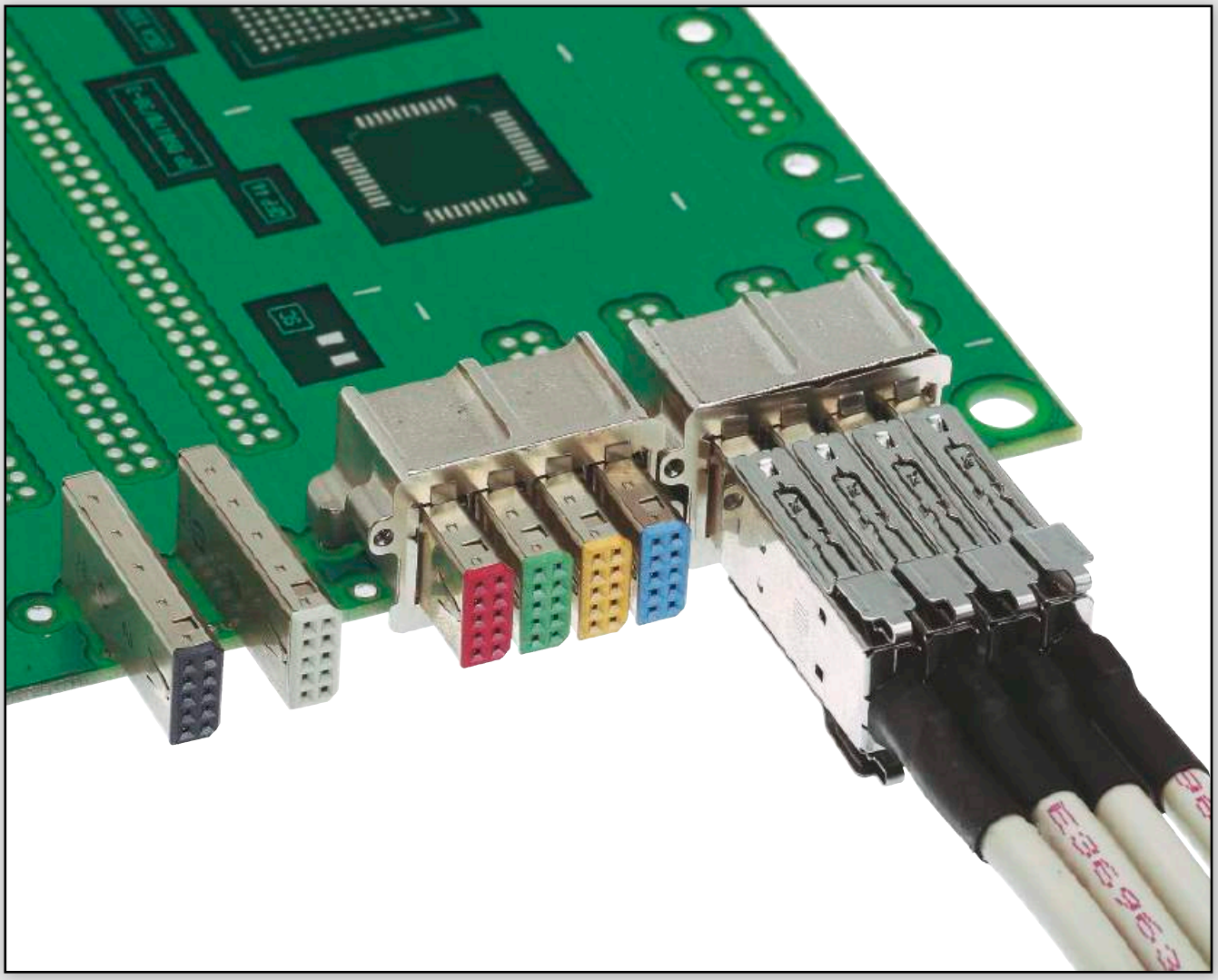

Specific features of the product range

- Data transmission up to 2 Gbit/s
- Is perfectly suited for modern transmission protocols such as Low Voltage Differential Signals (LVDS)

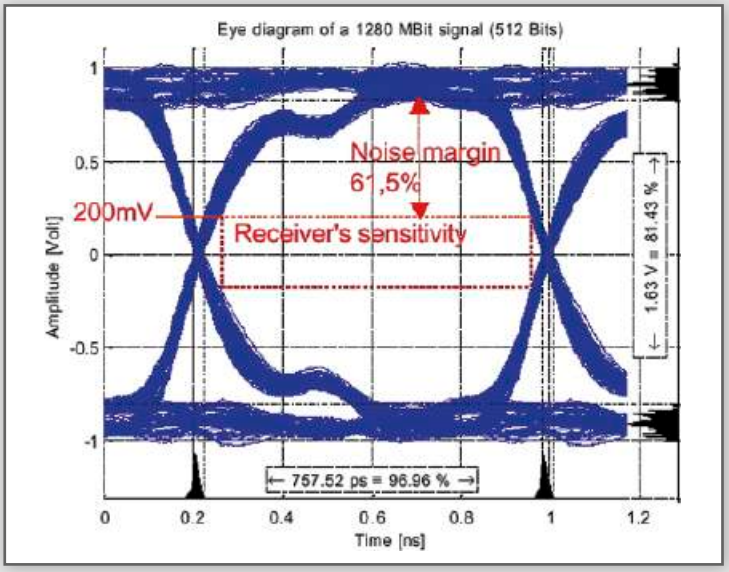

- A screening attenuation of more than 50 dB up to 1 GHz
- The high temperature resistant material of the female *har-link*® connector supports reflow soldering

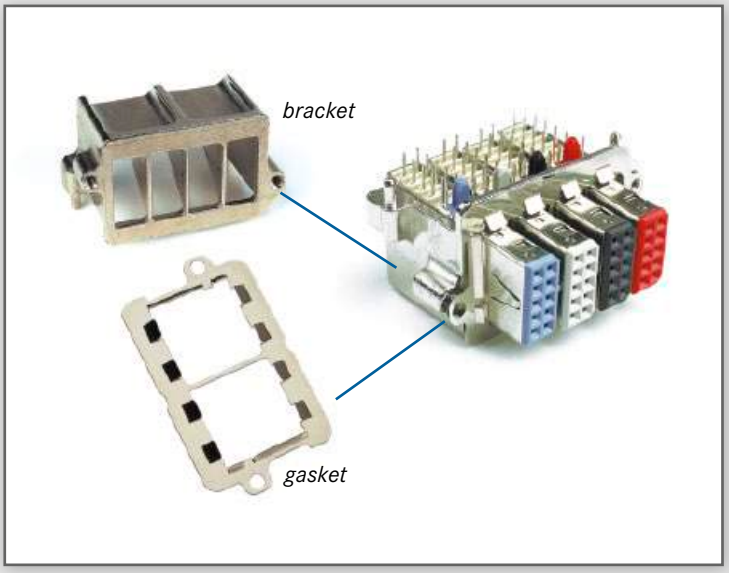

- Shielding with integrated locking levers
- Due to the locking levers on both sides of the male connector, the connection withstands a pulling force up to 80 N

The har:link® connector system of HARTING complies with the requirements of IEC 61076-4-107 and is a compact and robust pcb-to-cable interface with excellent data transmission properties for high-speed networking and telecommunications.

All dimensions of the har:link® connector are in accordance with IEC 917 and IEEE P 1301 requirements, which allows for easy implementation into both metric and inch-based systems. In addition, har:link® supports hot plugging as required by modern bus systems such as CompactPCI, S-bus and VME.

har:link® allows data transmission up to 2 Gbit/s per pair and is therefore perfectly suited for modern transmission protocols such as Low Voltage Differential Signals (see Fig. 1). The design of the har:link® connector allows differential pairs to be placed horizontally (parallel to the pcb), thus reducing the skew at high frequencies and considering high signal integrity.

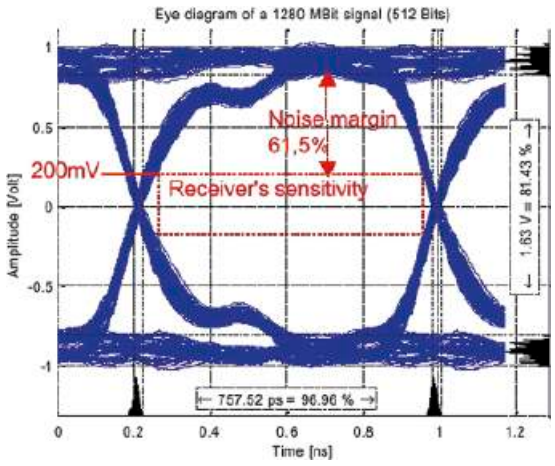

Fig. 1: Eye diagram of a 1280 MBit signal (512 Bits)

The metal shells of the har:link® connector are a guarantee for its superior performance in the EMI-polluted environment (see Fig. 2).

Fig. 2: 360° screened-can construction with locking levers

To reach a screening attenuation of more than 50 dB up to 1 GHz, HARTING offers brackets covering each connector in conjunction with a gasket, which is compressed between the bracket and the front panel (see Fig. 3).

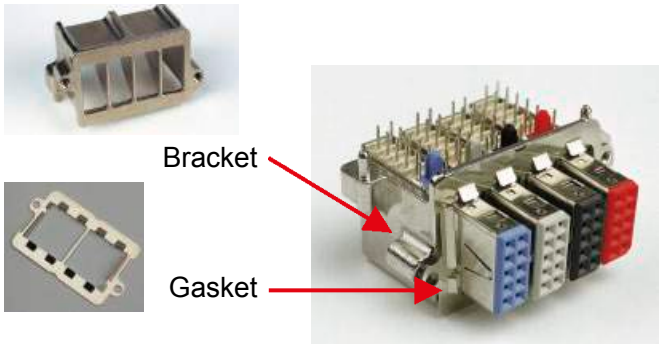

Fig. 3: 4 cavities bracket and gasket

Once plugged, the mated pair shows excellent mating safety. Due to the locking levers on both sides of the male connector, the connection withstands a pulling force of up to 80 N (see Fig. 2).

The high temperature resistant material of the har:link® female connector body supports the safe reflow soldering process. For easy identification of female modules, six different colours are available (see Fig. 4).

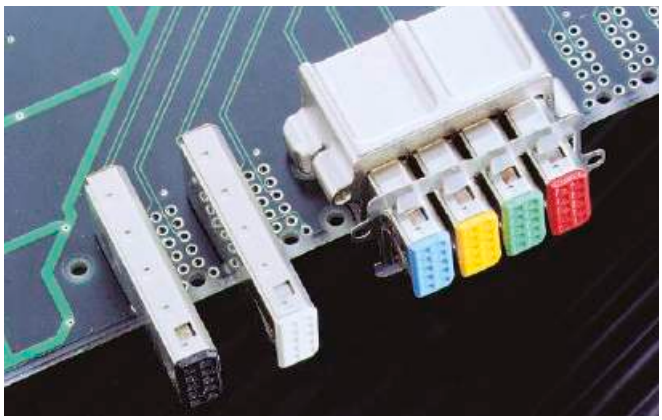

Fig. 4: Female modules

In addition to single connectors, HARTING provides cable assemblies with unshielded twisted pairs or with shielded twisted pairs for high speed applications such as IEEE 1355. A crimping tool range for terminating the male har:link® connectors is available.

Number of contacts	10
Approvals	IEC 61076-4-107 UL recognized: E102079
Contact pitch Connector pitch	2 mm 6 mm
Working current	1.5 A at 70 °C
Test voltage $U_{r.m.s.}$	750 V
Contact resistance Insulation resistance	≤ 35 mΩ ≥ 10^{10} Ω
Temperature range during reflow soldering	-55 °C … +125 °C female: max. + 260 °C for 60 s
Mating cycles	250, performance level 2
Terminations	Solder buckets (male), AWG 24-30, outer insulation Ø 5.33 ± 0.25 mm Solder pins for ø 0.6 mm min. (female)
Insertion force Withdrawal force	10 N max. / module 2 N min. / module (without locking levers)
Latching system	Locking levers
Materials	
Mouldings	Male connector: Polyester, UL 94-V0 Female connector: High temperature plastic material, UL 94-V0
Contacts	Copper alloy
Shells	Male connector: Stainless steel Female connector: Silver nickel
Contact surface	
Contact zone	Selectively plated according to performance level

Male connectors, straight
Female connectors, angled

Identification	No. of contacts	Colour	Part number
Male connector			
with solder buckets	10	Black	27 11 122 2001
Female connector			
with solder pins	10	Beige (standard)	27 21 121 8000
	10	Red	27 21 121 8002
	10	Yellow	27 21 121 8004
	10	Green	27 21 121 8005
	10	Blue	27 21 121 8006
	10	Black	27 21 121 8010

Male connector
(delivered in piece parts)

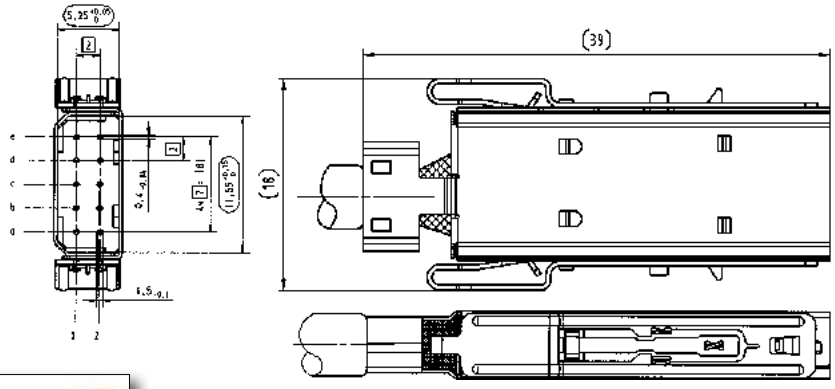

Manuals for the *har-link*® cable free connector assemblies are available on demand. Please contact your local HARTING representative.

Female connector

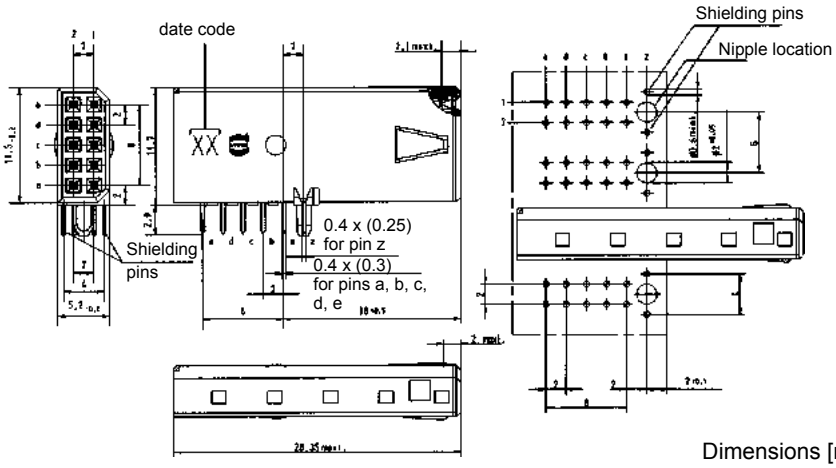

Dimensions [mm]

Tooling see chapter 20

Accessories and cable assemblies

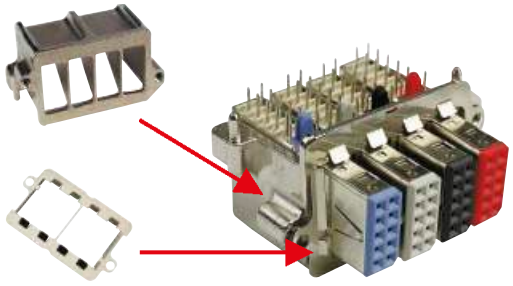

Identification	Part number	Drawing	Dimensions in mm
Bracket with four cavities	27 71 040 0001	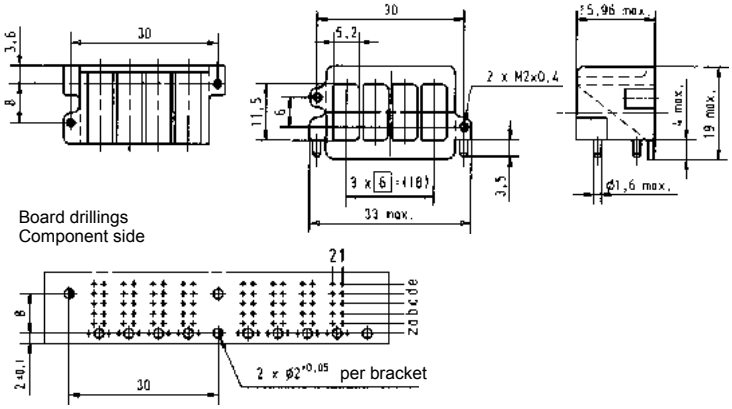	
Gasket with four cavities	27 71 040 0002	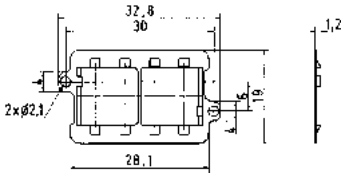	
Standard *har-link*® cable assembly Cable: 5 twisted pairs, AWG 28, shielded, PVC Wiring: 1:1		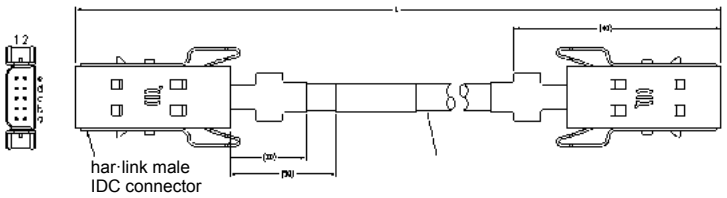	
Length: L = 0.5 m	33 27 243 0500 001		
L = 1.0 m	33 27 243 1000 002		
L = 2.0 m	33 27 243 2000 003		
High end *har-link*® cable assembly Cable: 5 twisted pairs, AWG 30, double shielded, PVC Wiring: 1:1			
Length: L = 0.5 m	33 27 243 0500 006		
L = 1.0 m	33 27 243 1000 007		
L = 2.0 m	33 27 243 2000 008		
Cable: 5 twisted pairs, AWG 30, double shielded, PVC Wiring: acc. to IEEE 1355		IEEE 1355 wiring	
Length: L = 0.5 m	33 27 243 0500 015		
L = 1.0 m	33 27 243 1000 016		
L = 2.0 m	33 27 243 2000 017		

Connector 1	Connector 2
2-e	1-a
1-e	2-a
2-d	1-b
1-d	2-b
2-c	2-c

Connector 1	Connector 2
1-c	1-c
2-b	1-d
1-b	2-d
2-a	1-e
1-a	2-e

08. SEK IDC Connectors

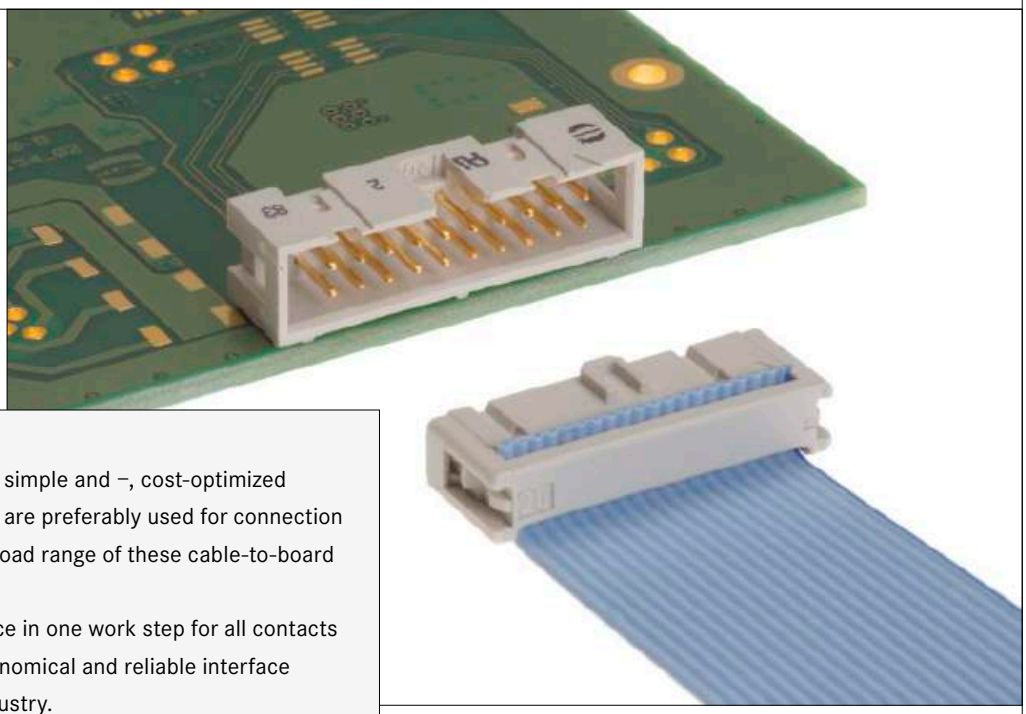

SEK connectors for flat cables enable simple and –, cost-optimized device configuration. SEK connectors are preferably used for connection within the device. HARTING offers a broad range of these cable-to-board connectors.
Assembly on the cable side takes place in one work step for all contacts via flat conductors. The SEK is an economical and reliable interface for data and signal applications in industry.

Application profile:

CONNECTION TYPE		ENVIRONMENT		APPLICATION						
Board to Board	Cable/ Wire to Board	IP20	IP65 / IP67	Data	Signal	Power	high performance			
							Data transfer rate	Shielding	Number of contacts, contact density	Voltage, working current
	●	●		●	●				●	

Cable termination

Han-Quick Lock®

Screw

IDC

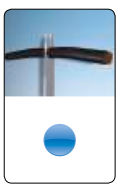

Cage clamp

Crimp

Axial screw

PCB termination

THT

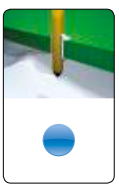

Press-in

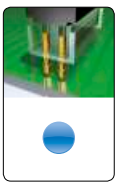

SMC

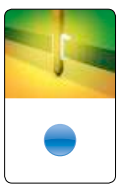

SMT

Application standard

Housing integration

Separate housing

Integrated housing

Contents

	Page
SEK connector system – introduction	**08.02**
General information	**08.04**
Solder board connectors	**08.05**
Male standard connectors	**08.06**
Male low-profile conncectors	**08.14**
Accessories	**08.16**
Wrap post connectors	
Male standard connectors	**08.17**
Accessories	**08.20**
Cable connectors	
Female connectors	**08.21**
Pcb transition connectors, 2 rows	**08.24**
Pcb transition connectors, 4 rows	**08.28**
DIP connectors	**08.30**
DIN 41612 connectors	**08.32**
Press-in connectors	
Male low-profile connectors	**08.34**
SMC solder board connectors	
Male standard SMC connectors	**08.36**
Male low-profile SMC connectors	**08.46**
Accessories	**08.48**
Cables and cable assemblies	**08.49**

Tooling see chapter 20

IDC CONNECTOR SYSTEM
[2.54 mm X 2.54 mm PITCH] FOR FLAT CABLES

HARTING's product range of flat cable connectors is designed for various cable-to-PCB applications. The HARTING SEK insulation displacement connector technology meets all requirements of the IEC 60 603-13.
HARTING assembles each SEK connector with the matching cable type according to customer specifications in order to simplify customer installation and storage.

The different types of board connectors offer 6 to 64 pins in various terminations such as solder (manual, wave or reflow) or press-in.
The cable connectors are equally suited for indoor use as well as for outdoor applications and harsh environments.

Specific features of the product range

CABLE ASSEMBLIES

- HARTING can supply cable assemblies according to your specifications.
- A wide range of connector types available with various contact arrangements constitute the ideal solution to your wiring problems.
- Cables of all types in economic reel lengths are available.

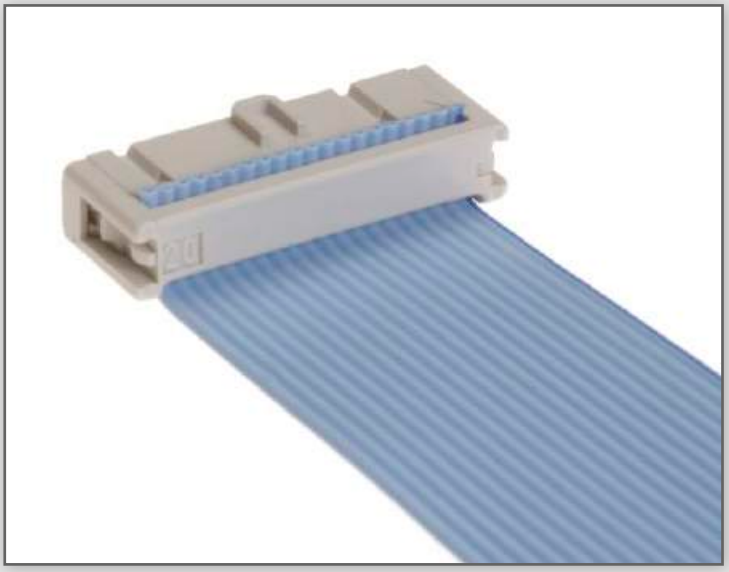

QUALITY

- Cables professionally assembled on HARTING work stations ensure reliable connections.
- Finished harnesses are subject to 100% quality checks on a HARTING test device.
- Insulation test by 1000 V.
- Contact resistance test.

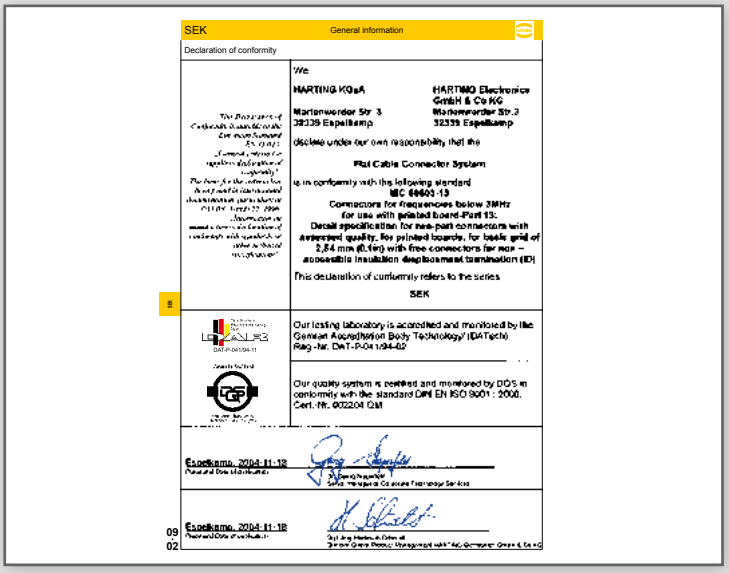

SEK General information

Declaration of conformity

We

HARTING KGaA
Marienwerder Str. 3
32339 Espelkamp

HARTING Electronics GmbH & Co KG
Marienwerder Str. 3
32339 Espelkamp

declare under our own responsibility that the

Flat Cable Connector System

is in conformity with the following standard

IEC 60603-13

Connectors for frequencies below 3MHz for use with printed board-Part 13:
Detail specification for rack-part connectors with improved quality, for printed boards, for basic grid of 2,54 mm (0,1in) with free connectors for non – accessible insulation displacement termination (ID)

This declaration of conformity refers to the series

SEK

Our testing laboratory is accredited and monitored by the German Accreditation Body Technology (DATech)
Reg.-Nr. DAT-P-041/94-02

Our quality system is certified and monitored by DQS in conformity with the standard DIN EN ISO 9001 : 2000.
Cert.-Nr. 002204 QM

Espelkamp, 2004-11-12

Espelkamp, 2004-11-12

09
02

ECONOMY

- The tested assembly of connectors and flat cables from one manufacturer guarantees a high degree of economy and reliability.
- Investments for work stations and test devices are not required.
- Stocks of piece parts are reduced.

The HARTING Insulation Displacement Connector system

Economic and reliable connections

The flat cable and connector can be preassembled and used as a component with predetermined functional characteristics.

The HARTING insulation displacement contacts pierce the insulation on the flat cable to provide a durable gastight connection with the wire.

The HARTING insulation displacement technique constitutes the ideal solution to your wiring problems.

For “non standard applications” we can manufacture designs to match your requirements.
Please discuss requirements with us.

HARTING SEK connectors incorporate the latest design features and provide the assurance of high quality and reliability with economy.

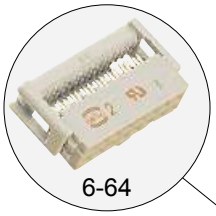
6-64

64

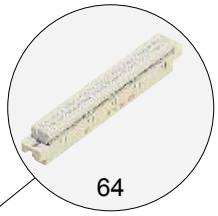
64

9-37

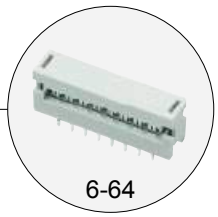
6-64

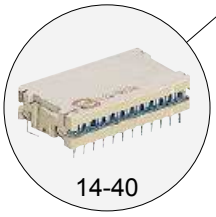
14-40

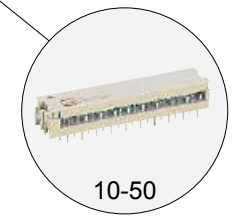
10-50

Cable assemblies

- HARTING can supply cable assemblies to customer specifications.
- A wide range of connector types available with various contact arrangements constitute the ideal solution to your wiring problems.
- Cables of all types in economic reel lengths are available.

Quality

- Cables professionally assembled on HARTING work stations ensure reliable connections.
- Finished harnesses are subject to 100% quality checks on a HARTING test device.
- Insulation test.
- Contact resistance test.

Economy

- The tested assembly of connectors and flat cables from one manufacturer guarantees a high degree of economy and reliability.
- Investment for work stations and test devices are not required.
- Stocks of piece parts are reduced.

Number of contacts	6, 10, 14, 16, 20, 24, 26, 30, 34, 40, 50, 60, 64
Contact arrangement	straight, angled
Contact length	2.9 mm, 4.5 mm
Approvals	IEC 60603-13 DIN EN 60603-13 D 2632 BT 224 NFC 93-428 (HE 10) UL recognized: E102079
Pitch	2.54 mm [0.100“]
Working current	1 A
Working voltage	500 V for pollution degree 1
Test voltage $U_{r.m.s.}$	1 kV
Contact resistance Insulation resistance	≤ 20 mΩ ≥ 10^9 Ω
Temperature range	-55 °C … +125 °C The maximum temperature includes heating of contacts and ambient temperature
Terminations	For pcb hole Ø 1 ± 0.1 mm DIN IEC 52141 Diagonal: 0.79 mm
Materials Moulding	 Thermoplastic resin (PBT) UL 94-V0
Contact surface Contact zone	 plated according to performance level[1)]

Current carrying capacity

The current carrying capacity is limited by maximum temperature of materials for inserts and contacts including terminals.
The current capacity-curve is valid for continuous, not interrupted current-loaded contacts of connectors when simultaneous power on all contacts is given, without exceeding the maximum temperature.

Control and test procedures according to DIN IEC 60512.

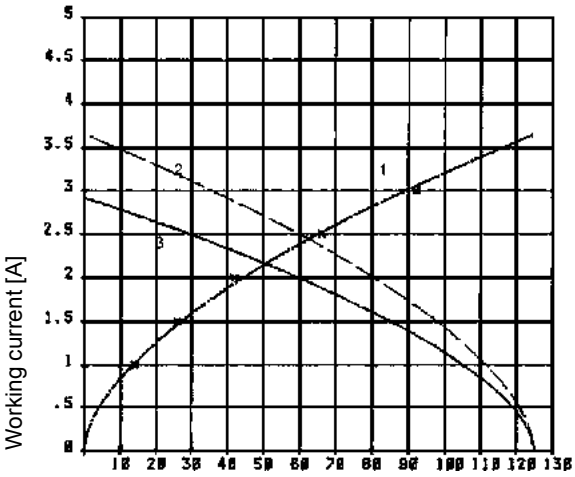

Example: 50 way connector
① Temperature rise
② Derating
③ Derating curve at $I_{max.}$ x 0.8 (IEC 60512-2)

Insertion and withdrawal forces

Number of contacts	Maximum force [N]	
	Performance level 1 and 2	Performance level 3
6	12	18
10	20	30
14	28	42
16	32	48
20	40	60
24	48	72
26	52	78
30	60	90
34	68	102
40	80	120
50	100	150
60	120	180
64	128	192

[1)] Performance level 3 as per IEC 60603-13, ≥ 50 mating cycles, no gas test
Performance level 2 as per IEC 60603-13, ≥ 250 mating cycles, 4 days gas test
S4, plating = 0.76 µm (30 µinch) Au or PdNi eqivalent

Number of contacts

6–64

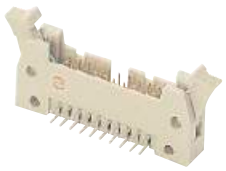
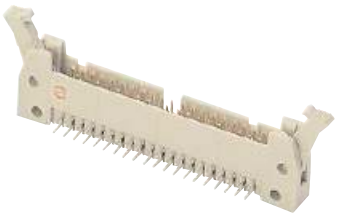

Male header with angled solder pins

Identification	No. of contacts	Part number ← Without levers	With short levers	With long levers →
Male header with angled solder pins Length: 2.9 mm				
	6	09 18 506 ⌴ 923	09 18 506 ⌴ 913	09 18 506 ⌴ 903
	10	09 18 510 ⌴ 923	09 18 510 ⌴ 913	09 18 510 ⌴ 903
	14	09 18 514 ⌴ 923	09 18 514 ⌴ 913	09 18 514 ⌴ 903
	16	09 18 516 ⌴ 923	09 18 516 ⌴ 913	09 18 516 ⌴ 903
	20	09 18 520 ⌴ 923	09 18 520 ⌴ 913	09 18 520 ⌴ 903
	24	09 18 524 ⌴ 923	09 18 524 ⌴ 913	09 18 524 ⌴ 903
	26	09 18 526 ⌴ 923	09 18 526 ⌴ 913	09 18 526 ⌴ 903
	30	09 18 530 ⌴ 923	09 18 530 ⌴ 913	09 18 530 ⌴ 903
	34	09 18 534 ⌴ 923	09 18 534 ⌴ 913	09 18 534 ⌴ 903
	40	09 18 540 ⌴ 923	09 18 540 ⌴ 913	09 18 540 ⌴ 903
	50	09 18 550 ⌴ 923	09 18 550 ⌴ 913	09 18 550 ⌴ 903
	60	09 18 560 ⌴ 923	09 18 560 ⌴ 913	09 18 560 ⌴ 903
	64	09 18 564 ⌴ 923	09 18 564 ⌴ 913	09 18 564 ⌴ 903
Kinked version on request				
Male header with angled solder pins Length: 4.5 mm				
	6	09 18 506 ⌴ 921*	09 18 506 ⌴ 911*	09 18 506 ⌴ 901*
	10	09 18 510 ⌴ 921*	09 18 510 ⌴ 911*	09 18 510 ⌴ 901*
	14	09 18 514 ⌴ 921*	09 18 514 ⌴ 911*	09 18 514 ⌴ 901*
	16	09 18 516 ⌴ 921*	09 18 516 ⌴ 911*	09 18 516 ⌴ 901*
	20	09 18 520 ⌴ 921*	09 18 520 ⌴ 911*	09 18 520 ⌴ 901*
	24	09 18 524 ⌴ 921*	09 18 524 ⌴ 911*	09 18 524 ⌴ 901*
	26	09 18 526 ⌴ 921*	09 18 526 ⌴ 911*	09 18 526 ⌴ 901*
	30	09 18 530 ⌴ 921*	09 18 530 ⌴ 911*	09 18 530 ⌴ 901*
	34	09 18 534 ⌴ 921*	09 18 534 ⌴ 911*	09 18 534 ⌴ 901*
	40	09 18 540 ⌴ 921*	09 18 540 ⌴ 911*	09 18 540 ⌴ 901*
	50	09 18 550 ⌴ 921*	09 18 550 ⌴ 911*	09 18 550 ⌴ 901*
	60	09 18 560 ⌴ 921*	09 18 560 ⌴ 911*	09 18 560 ⌴ 901*
	64	09 18 564 ⌴ 921*	09 18 564 ⌴ 911*	09 18 564 ⌴ 901*
Kinked version on request				

* Not normally kept in stock
For accessories see page 08.16
For dimensions see page 08.07

For performance level 3 please specify digit 7 6 5 *
For performance level 2 please specify digit 7 6 5 *
S4 = 0.76 µm (30 µinch) Au or PdNi eqivalent 7 6 5 *

Number of contacts

6–64

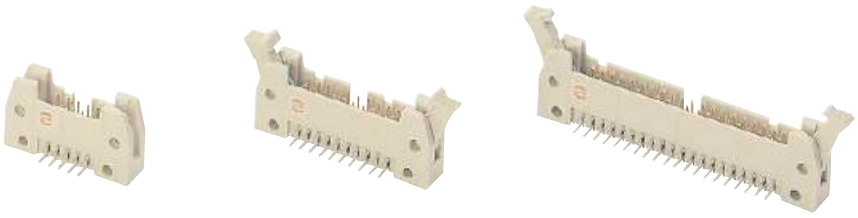

Male header with angled solder pins

Identification	Drawing	Dimensions in mm

Male header

No. of contacts	A	B	D	E	F	G
6	26.9	16.76	12.45	2.54 x 2 = 5.08	36.9	40.3
10	32.0	21.84	17.53	2.54 x 4 = 10.16	42.0	45.4
14	37.1	26.92	22.61	2.54 x 6 = 15.24	47.1	50.4
16	39.6	29.46	25.15	2.54 x 7 = 17.78	49.6	53.0
20	44.7	34.54	30.23	2.54 x 9 = 22.86	54.7	58.1
24	49.8	39.62	35.91	2.54 x 11 = 27.94	59.8	63.2
26	52.3	42.16	37.85	2.54 x 12 = 30.48	62.3	65.7
30	57.7	47.24	43.83	2.54 x 14 = 35.56	68.2	68.6
34	62.5	52.32	48.01	2.54 x 16 = 40.64	72.5	75.8
40	70.1	59.94	55.63	2.54 x 19 = 48.26	80.1	83.5
50	82.8	72.64	68.33	2.54 x 24 = 60.96	92.8	96.2
60	95.5	85.34	81.03	2.54 x 29 = 73.66	105.5	108.9
64	100.6	90.42	86.11	2.54 x 31 = 78.74	110.6	113.9

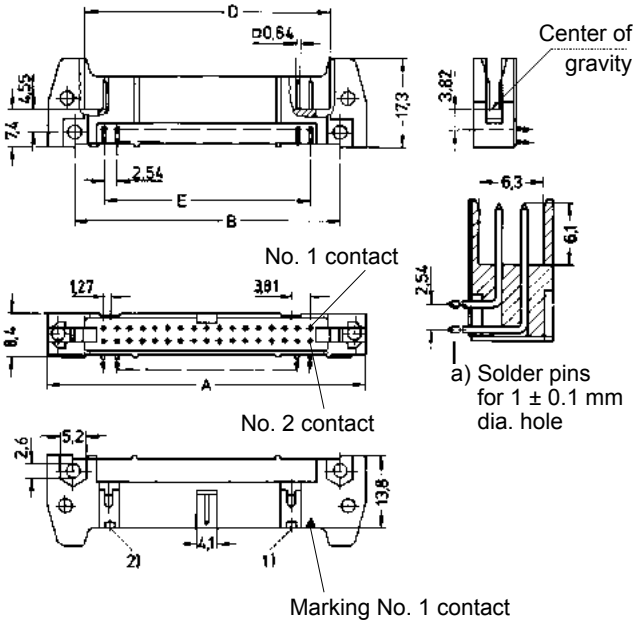

Short levers

for use with female connector without strain relief clamp

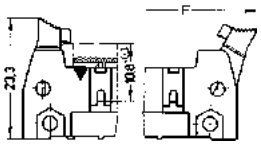

Long levers

for use with female connector with strain relief clamp

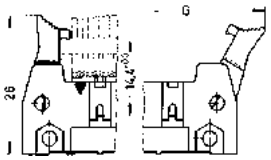

Board drillings

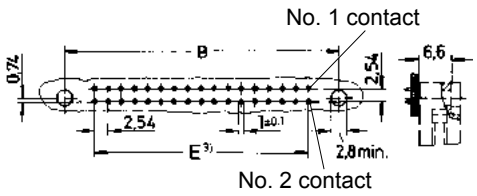

SEK

For accessories see page 08.16

1) No polarization slot for 6, 10 or 14 way male header

2) No polarization slot for 6 way male header

3) Pitch tolerance: ± 0.1

Number of contacts

6–64

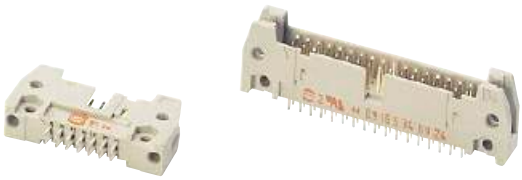

Male header with straight solder pins

Identification	No. of contacts	Part number Without levers	With short levers	With long levers
Male header with straight solder pins Length: 2.9 mm	6	09 18 506 ⌴ 924	09 18 506 ⌴ 914	09 18 506 ⌴ 904
	10	09 18 510 ⌴ 924	09 18 510 ⌴ 914	09 18 510 ⌴ 904
	14	09 18 514 ⌴ 924	09 18 514 ⌴ 914	09 18 514 ⌴ 904
	16	09 18 516 ⌴ 924	09 18 516 ⌴ 914	09 18 516 ⌴ 904
	20	09 18 520 ⌴ 924	09 18 520 ⌴ 914	09 18 520 ⌴ 904
	24	09 18 524 ⌴ 924	09 18 524 ⌴ 914	09 18 524 ⌴ 904
	26	09 18 526 ⌴ 924	09 18 526 ⌴ 914	09 18 526 ⌴ 904
	30	09 18 530 ⌴ 924	09 18 530 ⌴ 914	09 18 530 ⌴ 904
	34	09 18 534 ⌴ 924	09 18 534 ⌴ 914	09 18 534 ⌴ 904
	40	09 18 540 ⌴ 924	09 18 540 ⌴ 914	09 18 540 ⌴ 904
	50	09 18 550 ⌴ 924	09 18 550 ⌴ 914	09 18 550 ⌴ 904
	60	09 18 560 ⌴ 924	09 18 560 ⌴ 914	09 18 560 ⌴ 904
	64	09 18 564 ⌴ 924	09 18 564 ⌴ 914	09 18 564 ⌴ 904
Male header with straight solder pins Length: 4.5 mm	6	09 18 506 ⌴ 922*	09 18 506 ⌴ 912*	09 18 506 ⌴ 902*
	10	09 18 510 ⌴ 922*	09 18 510 ⌴ 912*	09 18 510 ⌴ 902*
	14	09 18 514 ⌴ 922*	09 18 514 ⌴ 912*	09 18 514 ⌴ 902*
	16	09 18 516 ⌴ 922*	09 18 516 ⌴ 912*	09 18 516 ⌴ 902*
	20	09 18 520 ⌴ 922*	09 18 520 ⌴ 912*	09 18 520 ⌴ 902*
	24	09 18 524 ⌴ 922*	09 18 524 ⌴ 912*	09 18 524 ⌴ 902*
	26	09 18 526 ⌴ 922*	09 18 526 ⌴ 912*	09 18 526 ⌴ 902*
	30	09 18 530 ⌴ 922*	09 18 530 ⌴ 912*	09 18 530 ⌴ 902*
	34	09 18 534 ⌴ 922*	09 18 534 ⌴ 912*	09 18 534 ⌴ 902*
	40	09 18 540 ⌴ 922*	09 18 540 ⌴ 912*	09 18 540 ⌴ 902*
	50	09 18 550 ⌴ 922*	09 18 550 ⌴ 912*	09 18 550 ⌴ 902*
	60	09 18 560 ⌴ 922*	09 18 560 ⌴ 912*	09 18 560 ⌴ 902*
	64	09 18 564 ⌴ 922*	09 18 564 ⌴ 912*	09 18 564 ⌴ 902*

Kinked version on request

* Not normally kept in stock
For accessories see page 08.16
For dimensions see page 08.09

For performance level 3 please specify digit 7 6 5 *
For performance level 2 please specify digit 7 6 5 *
S4 = 0.76 µm (30 µinch) Au or PdNi eqivalent 7 6 5 *

Number of contacts

6–64

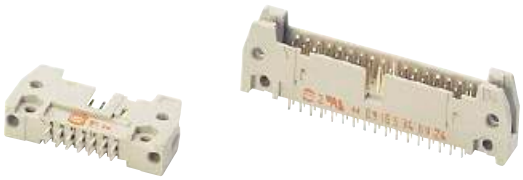

Male header with straight solder pins

Identification	Drawing	Dimensions in mm

Male header

No. of contacts	A	C	D	E	F	G
6	26.9	22.86	12.45	2.54 x 2 = 5.08	36.9	40.3
10	32.0	27.94	17.53	2.54 x 4 = 10.16	42.0	45.4
14	37.1	33.02	22.61	2.54 x 6 = 15.24	47.1	50.4
16	39.6	35.56	25.15	2.54 x 7 = 17.78	49.6	53.0
20	44.7	40.64	30.23	2.54 x 9 = 22.86	54.7	58.1
24	49.8	45.72	35.91	2.54 x 11 = 27.94	59.8	63.2
26	52.3	48.26	37.85	2.54 x 12 = 30.48	62.3	65.7
30	57.7	53.34	43.83	2.54 x 14 = 35.56	68.2	68.6
34	62.5	58.42	48.01	2.54 x 16 = 40.64	72.5	75.8
40	70.1	66.04	55.63	2.54 x 19 = 48.26	80.1	83.5
50	82.8	78.74	68.33	2.54 x 24 = 60.96	92.8	96.2
60	95.5	91.44	81.03	2.54 x 29 = 73.66	105.5	108.9
64	100.6	96.52	86.11	2.54 x 31 = 78.74	110.6	113.9

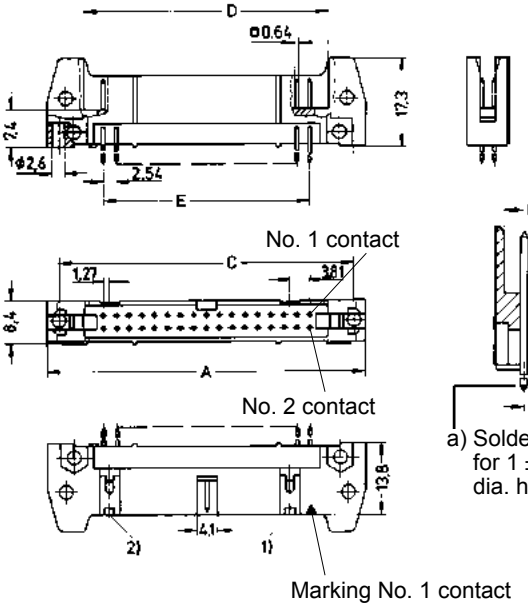

Short levers

for use with female connector without strain relief clamp

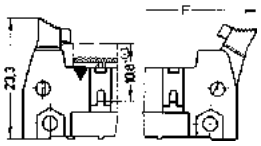

Long levers

for use with female connector with strain relief clamp

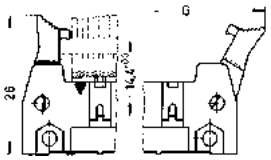

Board drillings

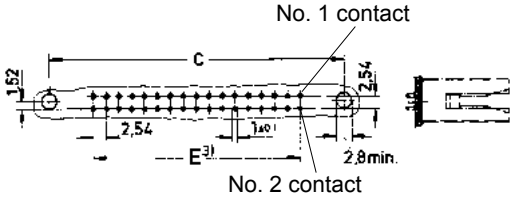

For accessories see page 08.16

1) No polarization slot for 6, 10 or 14 way male header

2) No polarization slot for 6 way male header

3) Pitch tolerance: ± 0.1

Number of contacts

6–64

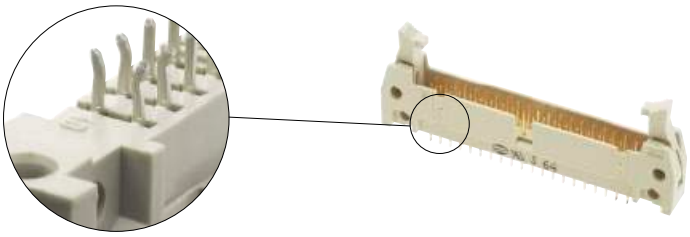

Male header with straight solder pins, kinked

Identification	No. of contacts	Part number Without levers	With short levers	With long levers
Male header with straight solder pins, kinked Length: 2.9 mm	6	09 18 506 ⌴ 024	09 18 506 ⌴ 014	09 18 506 ⌴ 004
	10	09 18 510 ⌴ 024	09 18 510 ⌴ 014	09 18 510 ⌴ 004
	14	09 18 514 ⌴ 024	09 18 514 ⌴ 014	09 18 514 ⌴ 004
	16	09 18 516 ⌴ 024	09 18 516 ⌴ 014	09 18 516 ⌴ 004
	20	09 18 520 ⌴ 024	09 18 520 ⌴ 014	09 18 520 ⌴ 004
	24	09 18 524 ⌴ 024	09 18 524 ⌴ 014	09 18 524 ⌴ 004
	26	09 18 526 ⌴ 024	09 18 526 ⌴ 014	09 18 526 ⌴ 004
	30	09 18 530 ⌴ 024	09 18 530 ⌴ 014	09 18 530 ⌴ 004
	34	09 18 534 ⌴ 024	09 18 534 ⌴ 014	09 18 534 ⌴ 004
	40	09 18 540 ⌴ 024	09 18 540 ⌴ 014	09 18 540 ⌴ 004
	50	09 18 550 ⌴ 024	09 18 550 ⌴ 014	09 18 550 ⌴ 004
	60	09 18 560 ⌴ 024	09 18 560 ⌴ 014	09 18 560 ⌴ 004
	64	09 18 564 ⌴ 024	09 18 564 ⌴ 014	09 18 564 ⌴ 004

* Not normally kept in stock
For accessories see page 08.16
For dimensions see page 08.11

For performance level 3 please specify digit 7 *
For performance level 2 please specify digit 6 *
S4 = 0.76 µm (30 µinch) Au or PdNi eqivalent 5 *

Number of contacts

6–64

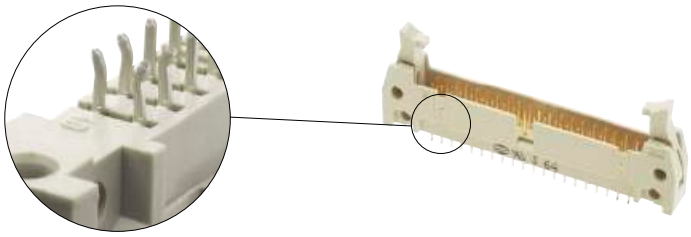

Male header with straight solder pins, kinked

Identification	Drawing	Dimensions in mm

Male header

No. of contacts	A	C	D	E	F	G
6	26.9	22.86	12.45	2.54 x 2 = 5.08	36.9	40.3
10	32.0	27.94	17.53	2.54 x 4 = 10.16	42.0	45.4
14	37.1	33.02	22.61	2.54 x 6 = 15.24	47.1	50.4
16	39.6	35.56	25.15	2.54 x 7 = 17.78	49.6	53.0
20	44.7	40.64	30.23	2.54 x 9 = 22.86	54.7	58.1
24	49.8	45.72	35.91	2.54 x 11 = 27.94	59.8	63.2
26	52.3	48.26	37.85	2.54 x 12 = 30.48	62.3	65.7
30	57.7	53.34	43.83	2.54 x 14 = 35.56	68.2	68.6
34	62.5	58.42	48.01	2.54 x 16 = 40.64	72.5	75.8
40	70.1	66.04	55.63	2.54 x 19 = 48.26	80.1	83.5
50	82.8	78.74	68.33	2.54 x 24 = 60.96	92.8	96.2
60	95.5	91.44	81.03	2.54 x 29 = 73.66	105.5	108.9
64	100.6	96.52	86.11	2.54 x 31 = 78.74	110.6	113.9

Short levers

for use with female connector without strain relief clamp

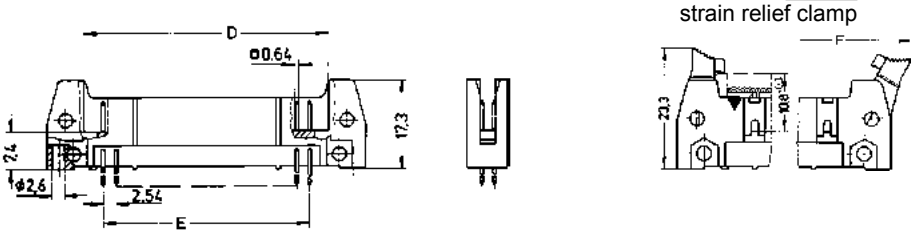

Long levers

for use with female connector with strain relief clamp

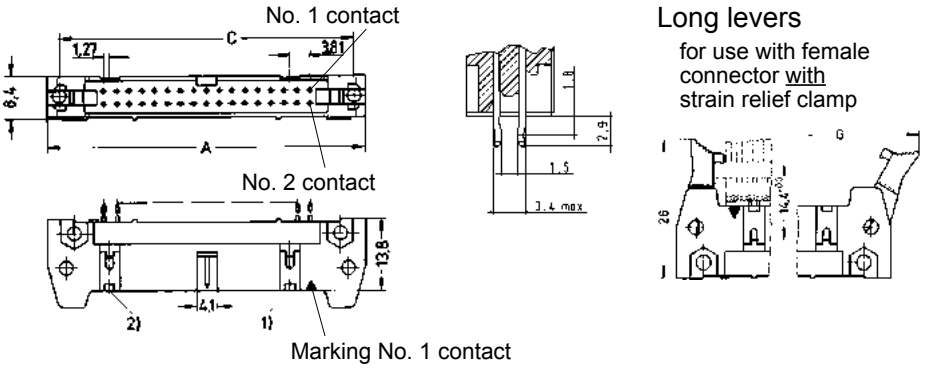

Board drillings

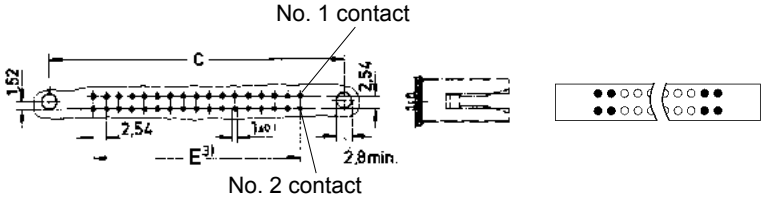

● Kinked contact: pcb thickness from 1.50 to 1.94 mm after Cu + Sn plating with non-remelted through holes ø 0.80 to ø 0.95 mm. Max. insertion force = 125 N. Min. retention force = 3 N.

○ Non-kinked contact: Solder pins for pcb connections ø 1 ± 0.1 mm as per IEC 60603-13.

For accessories see page 08.16

1) No polarization slot for 6, 10 or 14 way male header

2) No polarization slot for 6 way male header

3) Pitch tolerance: ± 0.1

Number of contacts

6–64

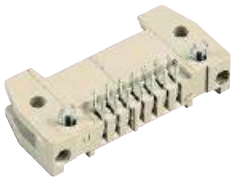

Male header with angled solder pins and board lock

Identification	No. of contacts	Part number Without levers	With short levers	With long levers
Male header with angled solder pins and pcb board lock Length: 2.9 mm for 1.6 mm pcb thickness	6	09 18 506 ␣ 973*	09 18 506 ␣ 963*	09 18 506 ␣ 953*
	10	09 18 510 ␣ 973*	09 18 510 ␣ 963*	09 18 510 ␣ 953*
	14	09 18 514 ␣ 973*	09 18 514 ␣ 963*	09 18 514 ␣ 953*
	16	09 18 516 ␣ 973*	09 18 516 ␣ 963*	09 18 516 ␣ 953*
	20	09 18 520 ␣ 973*	09 18 520 ␣ 963*	09 18 520 ␣ 953*
To hold the connector on the pcb before the soldering process, two board locks have been added on the male header with angled solder pins.	24	09 18 524 ␣ 973*	09 18 524 ␣ 963*	09 18 524 ␣ 953*
	26	09 18 526 ␣ 973*	09 18 526 ␣ 963*	09 18 526 ␣ 953*
	30	09 18 530 ␣ 973*	09 18 530 ␣ 963*	09 18 530 ␣ 953*
	34	09 18 534 ␣ 973*	09 18 534 ␣ 963*	09 18 534 ␣ 953*
	40	09 18 540 ␣ 973*	09 18 540 ␣ 963*	09 18 540 ␣ 953*
	50	09 18 550 ␣ 973*	09 18 550 ␣ 963*	09 18 550 ␣ 953*
	60	09 18 560 ␣ 973*	09 18 560 ␣ 963*	09 18 560 ␣ 953*
	64	09 18 564 ␣ 973*	09 18 564 ␣ 963*	09 18 564 ␣ 953*

* Not normally kept in stock

For performance level 3 please specify digit 7
For performance level 2 please specify digit 6
S4 = 0.76 µm (30 µinch) Au or PdNi eqivalent 5

Number of contacts

6–64

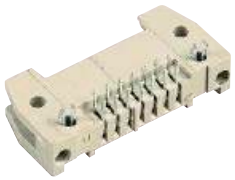

Male header with angled solder pins and board lock

Identification | Drawing | Dimensions in mm

Male header

No. of contacts	A	B	D	E	F	G
6	26.9	16.76	12.45	2.54 x 2 = 5.08	36.9	40.3
10	32.0	21.84	17.53	2.54 x 4 = 10.16	42.0	45.4
14	37.1	26.92	22.61	2.54 x 6 = 15.24	47.1	50.4
16	39.6	29.46	25.15	2.54 x 7 = 17.78	49.6	53.0
20	44.7	34.54	30.23	2.54 x 9 = 22.86	54.7	58.1
24	49.8	39.62	35.91	2.54 x 11 = 27.94	59.8	63.2
26	52.3	42.16	37.85	2.54 x 12 = 30.48	62.3	65.7
30	57.7	47.24	43.83	2.54 x 14 = 35.56	68.2	68.6
34	62.5	52.32	48.01	2.54 x 16 = 40.64	72.5	75.8
40	70.1	59.94	55.63	2.54 x 19 = 48.26	80.1	83.5
50	82.8	72.64	68.33	2.54 x 24 = 60.96	92.8	96.2
60	95.5	85.34	81.03	2.54 x 29 = 73.66	105.5	108.9
64	100.6	90.42	86.11	2.54 x 31 = 78.74	110.6	113.9

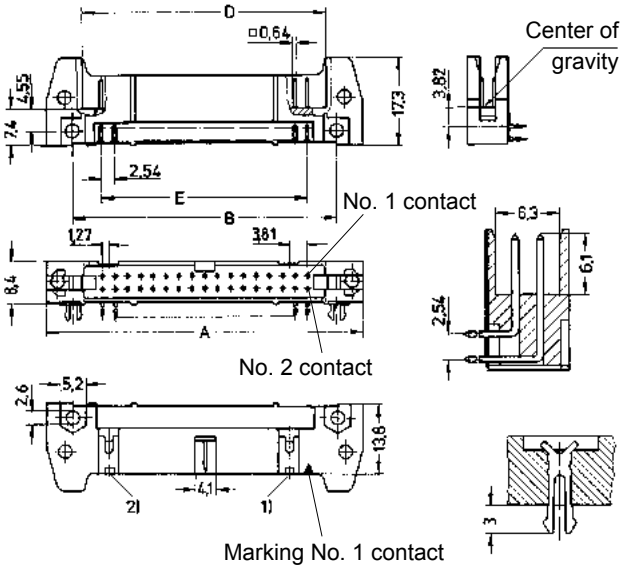

Short levers

for use with female connector without strain relief clamp

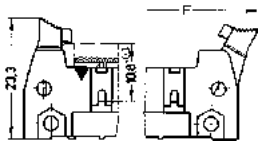

Long levers

for use with female connector with strain relief clamp

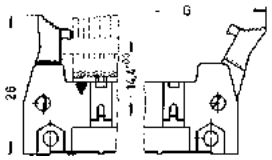

Board drillings

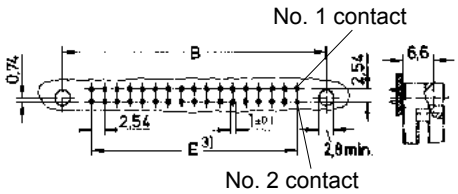

For accessories see page 08.16

1) No polarization slot for 6, 10 or 14 way male header

2) No polarization slot for 6 way male header

3) Pitch tolerance: ± 0.1

Number of contacts

6–64

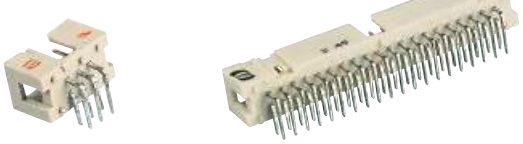

Low-profile male header, angled solder pins

Identification	No. of contacts	Part number
Male header with angled solder pins		
Length: 2.9 mm	6	09 18 506 ⌴ 323
	10	09 18 510 ⌴ 323
	14	09 18 514 ⌴ 323
	16	09 18 516 ⌴ 323
	20	09 18 520 ⌴ 323
	26	09 18 526 ⌴ 323
	30	09 18 530 ⌴ 323
	34	09 18 534 ⌴ 323
	40	09 18 540 ⌴ 323
	50	09 18 550 ⌴ 323
	60	09 18 560 ⌴ 323
	64	09 18 564 ⌴ 323

For performance level 3 please specify digit 7
For performance level 2 please specify digit 6
S4 = 0.76 µm (30 µinch) Au or PdNi eqivalent 5 *

Drawing

No. of contacts	A	B	E
6	15.2	12.78	2.54 x 2 = 5.08
10	20.3	17.86	2.54 x 4 = 10.16
14	25.4	22.94	2.54 x 6 = 15.24
16	27.9	25.48	2.54 x 7 = 17.78
20	33.0	30.56	2.54 x 9 = 22.86
26	40.6	38.18	2.54 x 12 = 30.48
30	45.72	43.26	2.54 x 14 = 35.56
34	50.8	48.34	2.54 x 16 = 40.64
40	58.4	55.96	2.54 x 19 = 48.26
50	71.3	68.66	2.54 x 24 = 60.96
60	84.0	81.36	2.54 x 29 = 73.66
64	89.1	86.44	2.54 x 31 = 78.74

Dimensions in mm

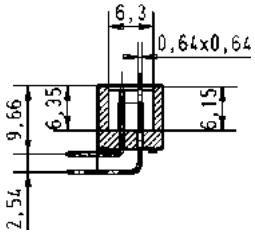

Solder pins for 1 ± 0.1 mm dia. hole

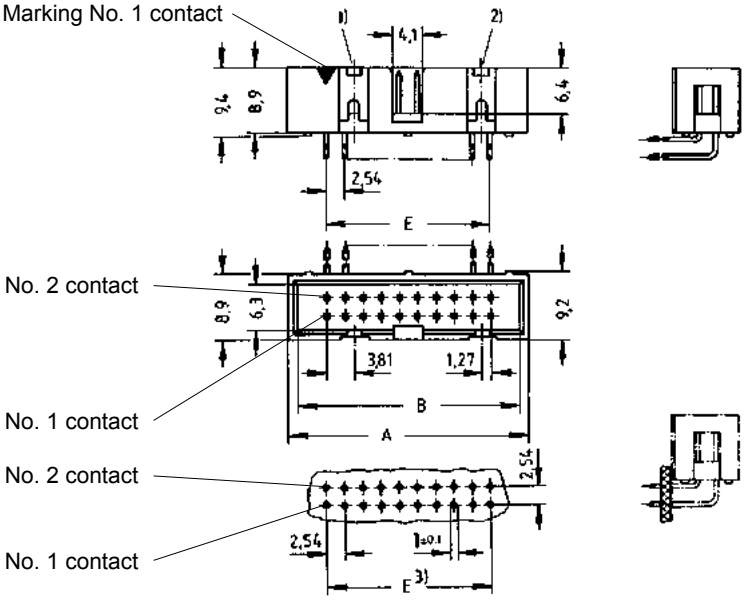

Identification	Part number
Locking lever for female connector with strain relief	
in conjunction with low-profile male header	
When the security of latching is required and space is a premium, these locking levers can be fitted onto the strain relief of the HARTING female connector.	09 18 000 9905 [4]

Drawing

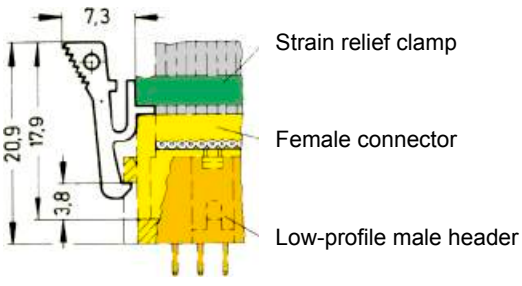

Dimensions in mm

* Not normally kept in stock

[1] No polarization slot for 6, 10 or 14 way male header
[2] No polarization slot for 6 way male header
[3] Pitch tolerance: ± 0.1
[4] Order 2 per female connector

Number of contacts

6–64

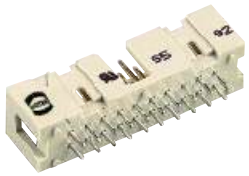

Low-profile male header, straight solder pins

Identification	No. of contacts	Part number
Male header with straight solder pins Length: 2.9 mm	6	09 18 506 ⌴ 324
	10	09 18 510 ⌴ 324
	14	09 18 514 ⌴ 324
	16	09 18 516 ⌴ 324
	20	09 18 520 ⌴ 324
	26	09 18 526 ⌴ 324
	30	09 18 530 ⌴ 324
	34	09 18 534 ⌴ 324
	40	09 18 540 ⌴ 324
	50	09 18 550 ⌴ 324
	60	09 18 560 ⌴ 324
	64	09 18 564 ⌴ 324
Male header with straight solder pins Length: 4.5 mm	6	09 18 506 ⌴ 322*
	10	09 18 510 ⌴ 322*
	14	09 18 514 ⌴ 322*
	16	09 18 516 ⌴ 322*
	20	09 18 520 ⌴ 322*
	26	09 18 526 ⌴ 322*
	30	09 18 530 ⌴ 322*
	34	09 18 534 ⌴ 322*
	40	09 18 540 ⌴ 322*
	50	09 18 550 ⌴ 322*
	60	09 18 560 ⌴ 322*
	64	09 18 564 ⌴ 322*

For performance level 3 please specify digit 7
For performance level 2 please specify digit 6
S4 = 0.76 µm (30 µinch) Au or PdNi eqivalent 5 *

Drawing

No. of contacts	A	B	E
6	15.2	12.78	2.54 x 2 = 5.08
10	20.3	17.86	2.54 x 4 = 10.16
14	25.4	22.94	2.54 x 6 = 15.24
16	27.9	25.48	2.54 x 7 = 17.78
20	33.0	30.56	2.54 x 9 = 22.86
26	40.6	38.18	2.54 x 12 = 30.48
30	45.72	43.26	2.54 x 14 = 35.56
34	50.8	48.34	2.54 x 16 = 40.64
40	58.4	55.96	2.54 x 19 = 48.26
50	71.3	68.66	2.54 x 24 = 60.96
60	84.0	81.36	2.54 x 29 = 73.66
64	89.1	86.44	2.54 x 31 = 78.74

Dimensions in mm

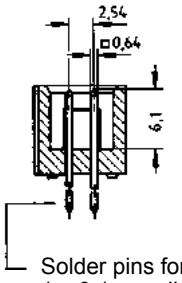

Solder pins for
1 ± 0.1 mm dia. hole

Marking No. 1 contact

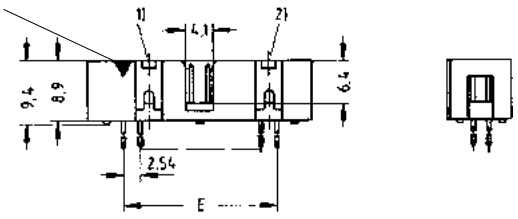

No. 2 contact

No. 1 contact

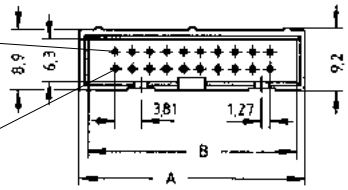

No. 2 contact

No. 1 contact

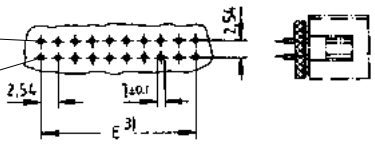

Identification	Part number
Locking lever for female connector with strain relief in conjunction with low-profile male header When the security of latching is required and space is a premium, these locking levers can be fitted onto the strain relief of the HARTING female connector.	09 18 000 9905[4]

Drawing

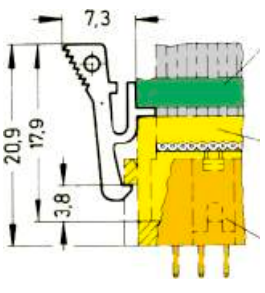

Strain relief clamp

Female connector

Low-profile male header

Dimensions in mm

* Not normally kept in stock

[1] No polarization slot for 6, 10 or 14 way male header
[2] No polarization slot for 6 way male header
[3] Pitch tolerance: ± 0.1
[4] Order 2 per female connector

Accessories

Identification	Part number	Drawing	Dimensions in mm
Polarization key 1) Part number comprises 2 keys	09 18 500 9902[1]	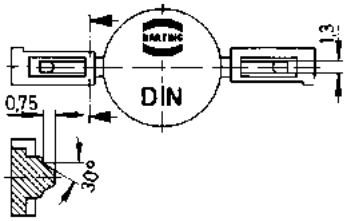	
Locking lever (snaps into place, can be fitted whenever required) 2) Order 2 per male header	Long: 09 18 000 9903[2] Short: 09 18 000 9904[2]	Long 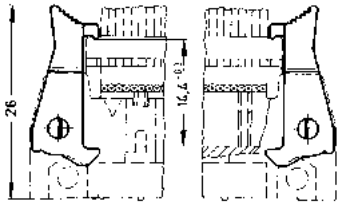 For use with female connector with strain relief clamp Short 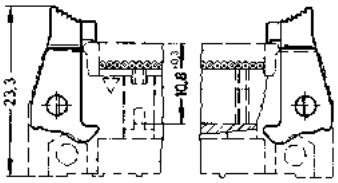 For use with female connector without strain relief clamp	
Fixing screws for 1.6 mm P.C. board 3) Part number comprises 50 pieces	09 18 000 9906[3]	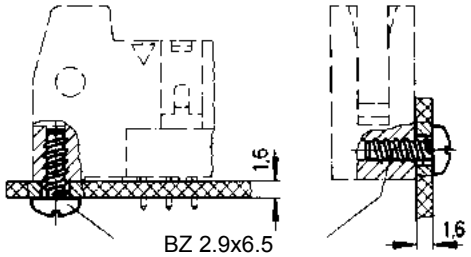 BZ 2.9x6.5 (DIN 7981 or DIN 7049)	For connectors with part numbers 09 18 5xx x9xx: screwing torque 0.2 Nm 09 19 5xx x9xx: screwing torque 0.4 – 0.5 Nm Screw material: Steel (Inox A2) Plating: Nickel
Coding system with loss of contact 4) Part number comprises 6 code pins	Code pin 09 18 000 9901[4] Removal tool for male contacts 09 99 000 0133	To avoid cross-plugging adjacent connectors a coding system is required. A code pin is inserted into the appropriate cavity in the female connector. The corresponding male contact is removed by a special removal tool. 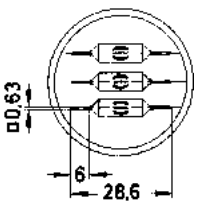 	

Number of contacts	6, 10, 14, 16, 20, 24, 26, 30, 34, 40, 50, 60, 64
Contact arrangement	straight, angled
Contact length	15 mm
Approvals	IEC 60603-13 DIN EN 60603-13 D 2632 BT 224 NFC 93-428 (HE 10)
Pitch	2.54 mm [0.100“]
Working current	1 A
Working voltage	500 V for pollution degree 1
Test voltage $U_{r.m.s.}$	1 kV
Contact resistance Insulation resistance	≤ 20 mΩ ≥ 10^9 Ω
Temperature range	-55 °C … +125 °C The maximum temperature includes heating of contacts and ambient temperature
Terminations	0.6 mm x 0.6 mm Diagonal: 0.86 mm
Materials Moulding	 Thermoplastic resin (PBT) UL 94-V0
Contact surface Contact zone	 plated according to performance level[1)]

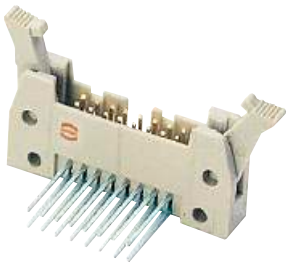

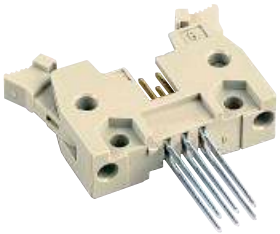

1) Performance level 3 as per IEC 60603-13, ≥ 50 mating cycles, no gas test
Performance level 2 as per IEC 60603-13, ≥ 250 mating cycles, 4 days gas test
S4, plating = 0.76 µm (30 µinch) Au or PdNi eqivalent

Number of contacts

6–64

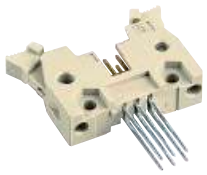

Male header with wrap posts

Identification	No. of contacts	Part number Without levers	With short levers	With long levers
Male header with angled wrap posts Length: 15 mm ☐ 0.6 mm	6	09 18 506 ⌴ 926*	09 18 506 ⌴ 916*	09 18 506 ⌴ 906*
	10	09 18 510 ⌴ 926*	09 18 510 ⌴ 916*	09 18 510 ⌴ 906*
	14	09 18 514 ⌴ 926*	09 18 514 ⌴ 916*	09 18 514 ⌴ 906*
	16	09 18 516 ⌴ 926*	09 18 516 ⌴ 916*	09 18 516 ⌴ 906*
	20	09 18 520 ⌴ 926*	09 18 520 ⌴ 916*	09 18 520 ⌴ 906*
	24	09 18 524 ⌴ 926*	09 18 524 ⌴ 916*	09 18 524 ⌴ 906*
	26	09 18 526 ⌴ 926*	09 18 526 ⌴ 916*	09 18 526 ⌴ 906*
	30	09 18 530 ⌴ 926*	09 18 530 ⌴ 916*	09 18 530 ⌴ 906*
	34	09 18 534 ⌴ 926*	09 18 534 ⌴ 916*	09 18 534 ⌴ 906*
	40	09 18 540 ⌴ 926*	09 18 540 ⌴ 916*	09 18 540 ⌴ 906*
	50	09 18 550 ⌴ 926*	09 18 550 ⌴ 916*	09 18 550 ⌴ 906*
	60	09 18 560 ⌴ 926*	09 18 560 ⌴ 916*	09 18 560 ⌴ 906*
	64	09 18 564 ⌴ 926*	09 18 564 ⌴ 916*	09 18 564 ⌴ 906*
Male header with straight wrap posts Length: 15 mm ☐ 0.6 mm	6	09 18 506 ⌴ 927*	09 18 506 ⌴ 917*	09 18 506 ⌴ 907*
	10	09 18 510 ⌴ 927*	09 18 510 ⌴ 917*	09 18 510 ⌴ 907*
	14	09 18 514 ⌴ 927*	09 18 514 ⌴ 917*	09 18 514 ⌴ 907*
	16	09 18 516 ⌴ 927*	09 18 516 ⌴ 917*	09 18 516 ⌴ 907*
	20	09 18 520 ⌴ 927*	09 18 520 ⌴ 917*	09 18 520 ⌴ 907*
	24	09 18 524 ⌴ 927*	09 18 524 ⌴ 917*	09 18 524 ⌴ 907*
	26	09 18 526 ⌴ 927*	09 18 526 ⌴ 917*	09 18 526 ⌴ 907*
	30	09 18 530 ⌴ 927*	09 18 530 ⌴ 917*	09 18 530 ⌴ 907*
	34	09 18 534 ⌴ 927*	09 18 534 ⌴ 917*	09 18 534 ⌴ 907*
	40	09 18 540 ⌴ 927*	09 18 540 ⌴ 917*	09 18 540 ⌴ 907*
	50	09 18 550 ⌴ 927*	09 18 550 ⌴ 917*	09 18 550 ⌴ 907*
	60	09 18 560 ⌴ 927*	09 18 560 ⌴ 917*	09 18 560 ⌴ 907*
	64	09 18 564 ⌴ 927*	09 18 564 ⌴ 917*	09 18 564 ⌴ 907*

* Not normally kept in stock
For accessories see page 08.20
For dimensions see page 08.19

For performance level 3 please specify digit 7
For performance level 2 please specify digit 6
S4 = 0.76 µm (30 µinch) Au or PdNi eqivalent 5

Number of contacts

6–64

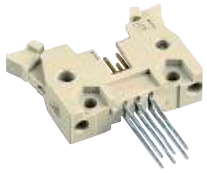

Male header with wrap posts

Identification | Drawing | Dimensions in mm

Male header

No. of contacts	A	B	C	D	E	F	G
6	26.9	16.76	22.86	12.45	2.54 x 2 = 5.08	36.9	40.3
10	32.0	21.84	27.94	17.53	2.54 x 4 = 10.16	42.0	45.4
14	37.1	26.92	33.02	22.61	2.54 x 6 = 15.24	47.1	50.4
16	39.6	29.46	35.56	25.15	2.54 x 7 = 17.78	49.6	53.0
20	44.7	34.54	40.64	30.23	2.54 x 9 = 22.86	54.7	58.1
24	49.8	39.62	45.72	35.91	2.54 x 11 = 27.94	59.8	63.2
26	52.3	42.16	48.26	37.85	2.54 x 12 = 30.48	62.3	65.7
30	57.7	47.24	53.43	43.83	2.54 x 14 = 35.56	68.2	68.6
34	62.5	52.32	58.42	48.01	2.54 x 16 = 40.64	72.5	75.8
40	70.1	59.94	66.04	55.63	2.54 x 19 = 48.26	80.1	83.5
50	82.8	72.64	78.74	68.33	2.54 x 24 = 60.96	92.8	96.2
60	95.5	85.34	91.44	81.03	2.54 x 29 = 73.66	105.5	108.9
64	100.6	90.42	96.52	86.11	2.54 x 31 = 78.74	110.6	113.9

Long levers

for use with female connector
with strain relief clamp

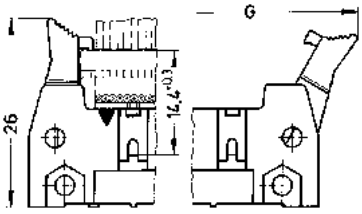

Short levers

for use with female connector
without strain relief clamp

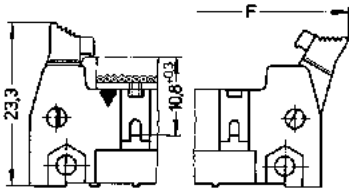

Angled versions

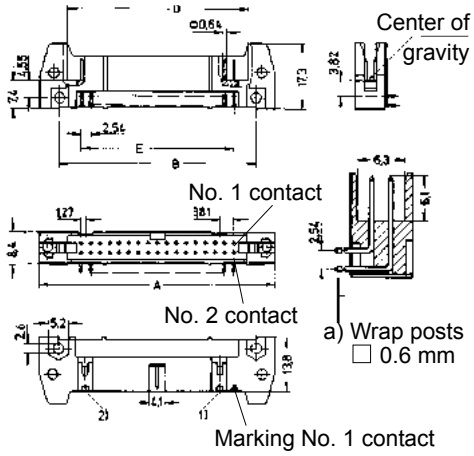

Straight versions

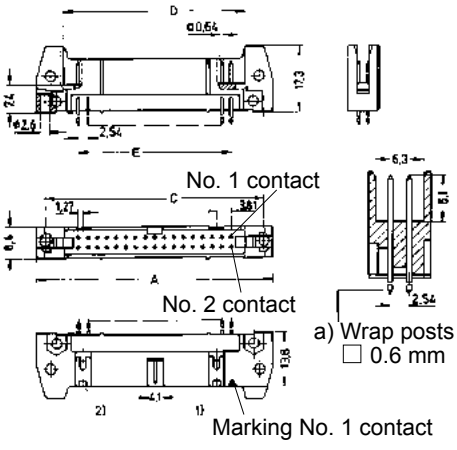

Board drillings

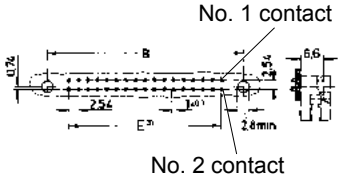

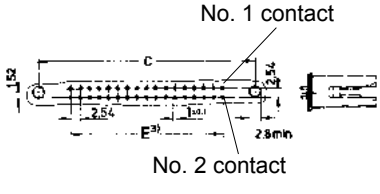

For accessories see page 08.20

[1] No polarization slot for 6, 10 or 14 way male header

[2] No polarization slot for 6 way male header

[3] Pitch tolerance: ± 0.1

Accessories

Identification	Part number	Drawing	Dimensions in mm
Polarization key 1) Part number comprises 2 keys	09 18 500 9902[1]	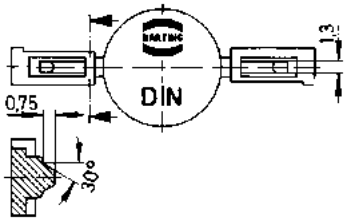	
Locking lever (snaps into place, can be fitted whenever required) 2) Order 2 per male header	Long: 09 18 000 9903[2] Short: 09 18 000 9904[2]	Long 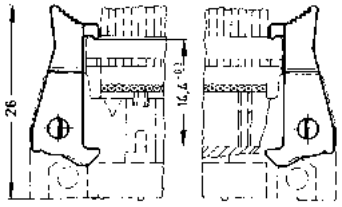 For use with female connector with strain relief clamp Short 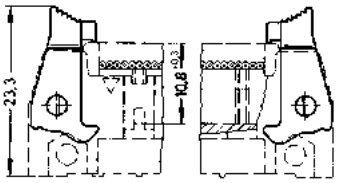 For use with female connector without strain relief clamp	
Fixing screws for 1.6 mm P.C. board 3) Part number comprises 50 pieces	09 18 000 9906[3]	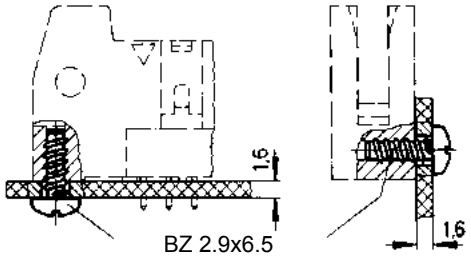 BZ 2.9x6.5 (DIN 7981 or DIN 7049)	For connectors with part numbers 09 18 5xx x9xx: screwing torque 0.2 Nm 09 19 5xx x9xx: screwing torque 0.4 – 0.5 Nm Screw material: Steel (Inox A2) Plating: Nickel
Coding system with loss of contact 4) Part number comprises 6 code pins	Code pin 09 18 000 9901[4] Removal tool for male contacts 09 99 000 0133	To avoid cross-plugging adjacent connectors a coding system is required. A code pin is inserted into the appropriate cavity in the female connector. The corresponding male contact is removed by a special removal tool. 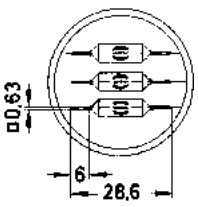 	

Number of contacts	6, 10, 14, 16, 20, 24, 26, 30, 34, 40, 50, 60, 64
Approvals	IEC 60603-13 DIN EN 60603-13 D 2632 BT 224 NFC 93-428 (HE 10) UL recognized: E102079
Pitch	On pcb side: 2.54 mm [0.100“] On cable side: 1.27 mm [0.050“]
Rated current	2.5 A min. at ambient temperature of 30 °C
Working voltage	320 V for pollution degree 1
Test voltage $U_{r.m.s.}$	1 kV
Contact resistance Insulation resistance	≤ 20 mΩ ≥ 10^9 Ω
Temperature range	-55 °C … +125 °C The maximum temperature includes heating of contacts and ambient temperature
Terminations	IDC flat cable 1.27 mm [0.050”] pitch: AWG 26/7 – AWG 28/7
Materials Moulding	 Thermoplastic resin (PBT) UL 94-V0
Contact surface Contact zone	 gold-plated according to performance level[1)]

Current carrying capacity

The current carrying capacity is limited by maximum temperature of materials for inserts and contacts including terminals.
The current capacity-curve is valid for continuous, not interrupted current-loaded contacts of connectors when simultaneous power on all contacts is given, without exceeding the maximum temperature.

Control and test procedures according to IEC 60512.

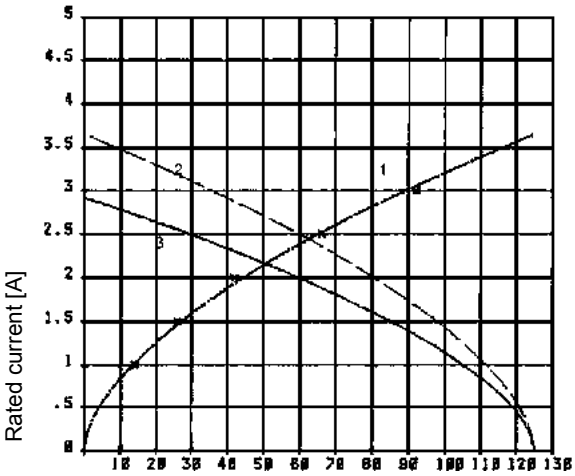

Example: 50 way connector
① Temperature rise
② Derating
③ Derating curve at $I_{max.}$ x 0.8 (IEC 60512-2)

Insertion and withdrawal forces

Number of contacts	Maximum force [N]	
	Performance level 1 and 2	Performance level 3
6	12	18
10	20	30
14	28	42
16	32	48
20	40	60
24	48	72
26	52	78
30	60	90
34	68	102
40	80	120
50	100	150
60	120	180
64	128	192

[1)] Performance level 3 as per IEC 60603-13, ≥ 50 mating cycles, no gas test
Performance level 2 as per IEC 60603-13, ≥ 250 mating cycles, 4 days gas test
S4, plating = 0.76 µm (30 µinch) Au or PdNi eqivalent

Number of contacts

6–64

Female connector

Identification	No. of contacts	Part number open end cover	Part number closed end cover
Female connector with central polarization			
without strain relief clamp	6	09 18 506 ⌴ 803	09 18 506 ⌴ 804
	10	09 18 510 ⌴ 803	09 18 510 ⌴ 804
	14	09 18 514 ⌴ 803	09 18 514 ⌴ 804
	16	09 18 516 ⌴ 803	09 18 516 ⌴ 804
	20	09 18 520 ⌴ 803	09 18 520 ⌴ 804
	24	09 18 524 ⌴ 803	
	26	09 18 526 ⌴ 803	09 18 526 ⌴ 804
	30	09 18 530 ⌴ 803	09 18 530 ⌴ 804
	34	09 18 534 ⌴ 803	09 18 534 ⌴ 804
	40	09 18 540 ⌴ 803	09 18 540 ⌴ 804
	50	09 18 550 ⌴ 803	09 18 550 ⌴ 804
	60	09 18 560 ⌴ 803	09 18 560 ⌴ 804
	64	09 18 564 ⌴ 803	09 18 564 ⌴ 804
without strain relief clamp with bulk packaging	6	09 18 506 ⌴ 803 58U[2]	
	10	09 18 510 ⌴ 803 58U[2]	
	14	09 18 514 ⌴ 803 58U[2]	
	16	09 18 516 ⌴ 803 58U[2]	
	20	09 18 520 ⌴ 803 58U[2]	
	26	09 18 526 ⌴ 803 58U[2]	
	30	09 18 530 ⌴ 803 58U[2]	
	34	09 18 534 ⌴ 803 58U[3]	
	40	09 18 540 ⌴ 803 58U[3]	
with strain relief clamp	6	09 18 506 ⌴ 813	09 18 506 ⌴ 814*
	10	09 18 510 ⌴ 813	09 18 510 ⌴ 814*
	14	09 18 514 ⌴ 813	09 18 514 ⌴ 814*
	16	09 18 516 ⌴ 813	09 18 516 ⌴ 814*
	20	09 18 520 ⌴ 813	09 18 520 ⌴ 814*
	24	09 18 524 ⌴ 813	
	26	09 18 526 ⌴ 813	09 18 526 ⌴ 814*
	30	09 18 530 ⌴ 813	09 18 530 ⌴ 814*
	34	09 18 534 ⌴ 813	09 18 534 ⌴ 814*
	40	09 18 540 ⌴ 813	09 18 540 ⌴ 814*
	50	09 18 550 ⌴ 813	09 18 550 ⌴ 814*
	60	09 18 560 ⌴ 813	09 18 560 ⌴ 814*
	64	09 18 564 ⌴ 813	09 18 564 ⌴ 814*
with strain relief clamp with bulk packaging	6	09 18 506 ⌴ 813 58U[3]	
	10	09 18 510 ⌴ 813 58U[3]	
	14	09 18 514 ⌴ 813 58U[4]	
	16	09 18 516 ⌴ 813 58U[4]	
	20	09 18 520 ⌴ 813 58U[5]	
	26	09 18 526 ⌴ 813 58U[6]	
	30	09 18 530 ⌴ 813 58U[5]	
	34	09 18 534 ⌴ 813 58U[7]	
	40	09 18 540 ⌴ 813 58U[7]	

Drawing

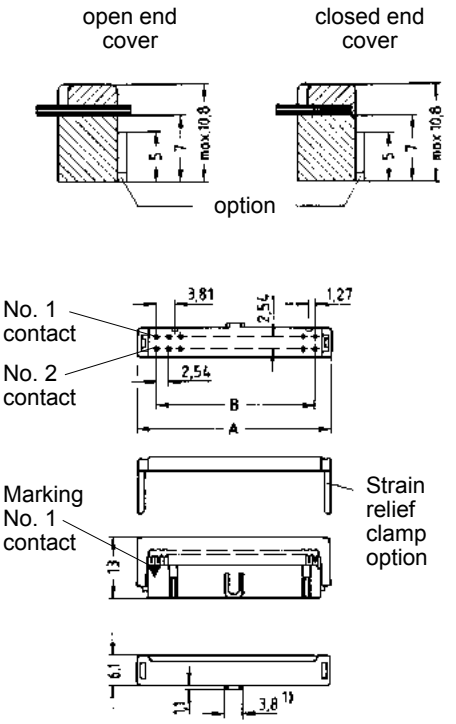

Dimensions in mm

No. of contacts	6	10	14	16	20
A	12.20	17.30	22.40	24.90	30.00
B	5.08	10.16	15.24	17.78	22.86

No. of contacts	24	26	30	34	40
A	35.18	37.60	42.70	47.80	55.40
B	27.94	30.48	35.56	40.64	48.26

No. of contacts	50	60	64		
A	68.10	80.80	85.90		
B	60.96	73.66	78.74		

[2] Packaging unit (PU) 5,000 pieces
[3] PU 3,000 pieces
[3] Packaging unit (PU) 3,000 pieces
[4] PU 2,500 pieces
[5] PU 2,000 pieces
[6] PU 1,500 pieces
[7] PU 1,000 pieces

For performance level 3 please specify digit 7 6 5 *
For performance level 2 please specify digit 7 6 5 *
S4 = 0.76 µm (30 µinch) Au or PdNi eqivalent

[1] Pitch tolerance: ± 0.1
* Not normally kept in stock

Number of contacts

6–64

Strain relief clamp/Locking lever

Identification	No. of contacts	Part number	Drawing	Dimensions in mm
Strain relief clamp	6	09 18 506 9002		
	10	09 18 510 9002		
	14	09 18 514 9002		
	16	09 18 516 9002		
	20	09 18 520 9002		
	24	09 18 524 9002		
	26	09 18 526 9002		
	30	09 18 530 9002		
	34	09 18 534 9002		
	40	09 18 540 9002		
	50	09 18 550 9002		
	60	09 18 560 9002		
	64	09 18 564 9002		
with bulk packaging	6	09 18 506 9002 58U[3)]		
	10	09 18 510 9002 58U[3)]		
	14	09 18 514 9002 58U[3)]		
	16	09 18 516 9002 58U[3)]		
	20	09 18 520 9002 58U[3)]		
	26	09 18 526 9002 58U[3)]		
	30	09 18 530 9002 58U[3)]		
	34	09 18 534 9002 58U[4)]		
	40	09 18 540 9002 58U[4)]		

No. of contacts	A
6	12.2
10	17.3
14	22.4
16	24.9
20	30.0
24	35.18
26	37.6
30	42.7
34	47.8
40	55.4
50	68.1
60	80.8
64	85.9

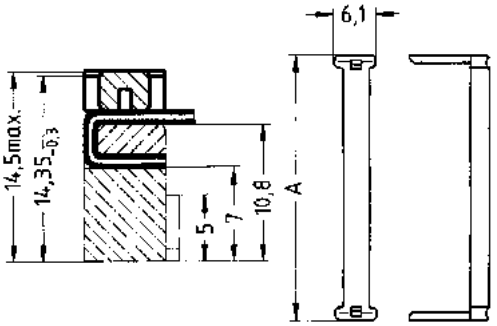

[3)] Packaging unit 5,000 pieces
[4)] Packaging unit 3,000 pieces

Locking lever for female connector

Only in conjunction with low-profile male header and strain relief

09 18 000 9905[1)5)]
09 18 000 9905 58U[1)6)]

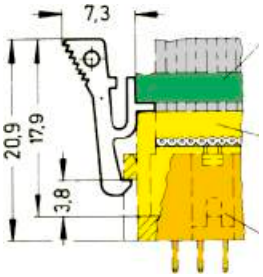

Strain relief clamp

Female connector

Low-profile male header

When the security of latching is required and space is a premium, these locking levers can be fitted onto the strain relief of the HARTING female connector. This can then be used in conjunction with male low-profile headers (see pages 08.14 and 08.15).

[5)] Packaging unit 100 pieces
[6)] Packaging unit 5,000 pieces

Coding system with loss of contact

Code pin — 09 18 000 9901[2)]

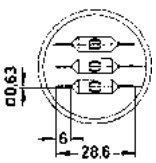

To avoid cross-plugging adjacent connectors a coding system is required. A code pin is inserted into the appropriate cavity in the female connector. The corresponding male contact is removed by a special removal tool.

Removal tool for male contacts — 09 99 000 0133

[1)] Order 2 per female connector
[2)] Part number comprises 6 code pins

Number of contacts	4, 6, 8, 10, 14, 16, 20, 24, 26, 30, 34, 40, 50, 60, 64
Approvals	UL recognized: E102079
Pitch	On pcb side: 2.54 mm [0.100“] On cable side: 1.27 mm [0.050“]
Rated current	2.6 A min. at ambient temperature of 30 °C
Working voltage	320 V for pollution degree 1
Test voltage $U_{r.m.s.}$	1 kV AC – 1 minute
Contact resistance Insulation resistance	35 mΩ max. mated ≥ 10^9 Ω
Temperature range	-55 °C … +105 °C The maximum temperature includes heating of contacts and ambient temperature
Terminations	Solder pins: 0.5 mm x 0.35 mm Dimensions for pcb hole: Standard version: Ø $0.8^{\pm 0.1}$ mm Kinked version: Ø $0.85^{\pm 0.15}$ mm Diagonal: 0.63 mm IDC flat cable 1.27 mm [0.050“] pitch: AWG 28/7
Materials	
Moulding	Thermoplastic resin (PBT) UL 94-V0
Contact	Copper alloy

Current carrying capacity

The current carrying capacity is limited by maximum temperature of materials for inserts and contacts including terminals.
The current capacity-curve is valid for continuous, not interrupted current-loaded contacts of connectors when simultaneous power on all contacts is given, without exceeding the maximum temperature.

Control and test procedures according to IEC 60 512.

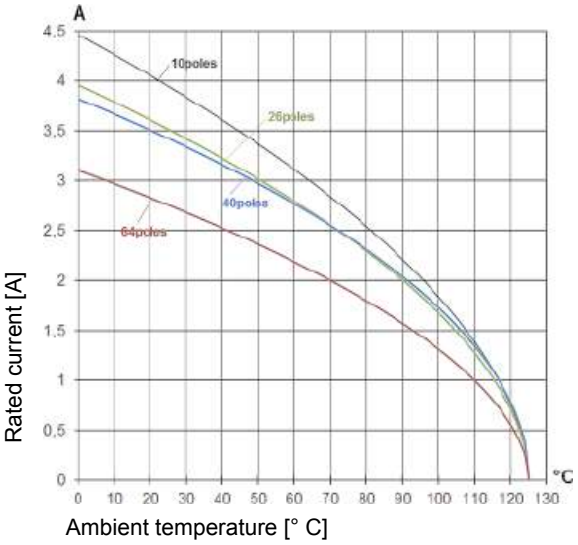

Derating curve at $I_{max.}$ x 0.8 (IEC 60 512-2)

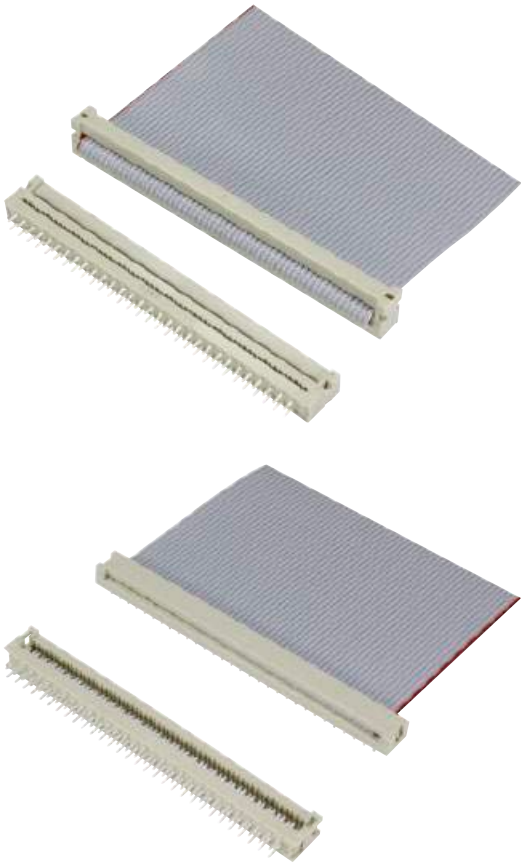

Number of contacts

4–64

Pcb transition connector,
2 rows with strain relief clamp, low-profile with 5.5 mm height

Identification	No. of contacts	Part number
Pcb transition connector 2 rows with strain relief clamp Standard low-profile version	4	09 18 104 9623*
	6	09 18 106 9623*
	8	09 18 108 9623*
	10	09 18 110 9623*
	14	09 18 114 9623*
	16	09 18 116 9623*
	20	09 18 120 9623*
	24	09 18 124 9623*
	26	09 18 126 9623*
	30	09 18 130 9623*
	34	09 18 134 9623*
	40	09 18 140 9623
	50	09 18 150 9623*
	60	09 18 160 9623
	64	09 18 164 9623*
Pcb transition connector 2 rows with strain relief clamp Kinked low-profile version 2 kinked pins at each extremity	4	09 18 104 9423*
	6	09 18 106 9423*
	8	09 18 108 9423*
	10	09 18 110 9423*
	14	09 18 114 9423*
	16	09 18 116 9423*
	20	09 18 120 9423*
	24	09 18 124 9423*
	26	09 18 126 9423*
	30	09 18 130 9423*
	34	09 18 134 9423*
	40	09 18 140 9423
	50	09 18 150 9423*
	60	09 18 160 9423
	64	09 18 164 9423*
Board drillings		

Drawing

Dimensions in mm

No. of contacts	$A^{\pm 0.38}$	$B^{\pm 0.10}$
4	10.38	2.54 x 1 = 2.54
6	12.92	2.54 x 2 = 5.08
8	15.46	2.54 x 3 = 7.62
10	18.00	2.54 x 4 = 10.16
14	23.08	2.54 x 6 = 15.24
16	25.62	2.54 x 7 = 17.78
20	30.74	2.54 x 9 = 22.86
24	35.78	2.54 x 11 = 27.94
26	38.32	2.54 x 12 = 30.48
30	43.40	2.54 x 14 = 35.56
34	48.48	2.54 x 16 = 40.64
40	56.10	2.54 x 19 = 48.26
50	68.80	2.54 x 24 = 60.96
60	81.50	2.54 x 29 = 73.66
64	86.58	2.54 x 31 = 78.74

Assembled cover with strain relief

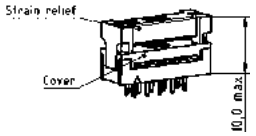

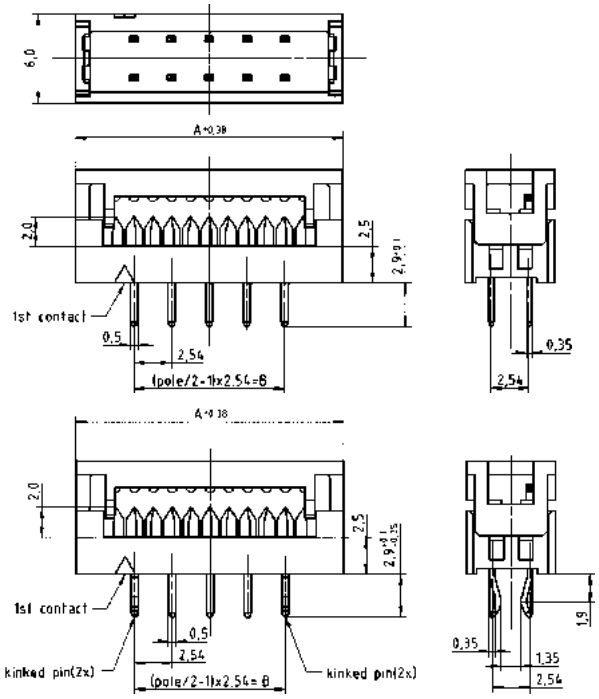

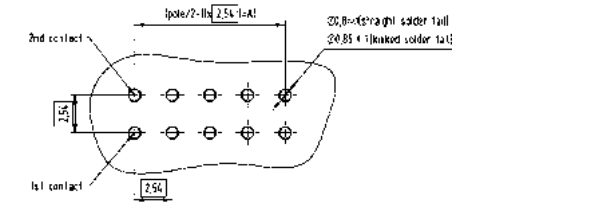

Not released for halogen free flat cables
* Available on request

Number of contacts

4–64

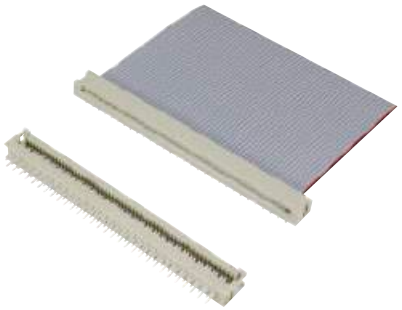

Pcb transition connector,
2 rows without strain relief clamp, low-profile with 5.5 mm height

Identification	No. of contacts	Part number
Pcb transition connector		
2 rows without strain relief clamp Standard low-profile version	4	09 18 104 9622
	6	09 18 106 9622
	8	09 18 108 9622
	10	09 18 110 9622
	14	09 18 114 9622
	16	09 18 116 9622
	20	09 18 120 9622
	24	09 18 124 9622
	26	09 18 126 9622
	30	09 18 130 9622
	34	09 18 134 9622
	40	09 18 140 9622
	50	09 18 150 9622
	60	09 18 160 9622
	64	09 18 164 9622
Pcb transition connector		
2 rows without strain relief clamp Kinked low-profile version 2 kinked pins at each extremity	4	09 18 104 9422
	6	09 18 106 9422
	8	09 18 108 9422
	10	09 18 110 9422
	14	09 18 114 9422
	16	09 18 116 9422
	20	09 18 120 9422
	24	09 18 124 9422
	26	09 18 126 9422
	30	09 18 130 9422
	34	09 18 134 9422
	40	09 18 140 9422
	50	09 18 150 9422
	60	09 18 160 9422
	64	09 18 164 9422
Board drillings		

Dimensions in mm

No. of contacts	A ±0.38	B ±0.10
4	10.38	2.54 x 1 = 2.54
6	12.92	2.54 x 2 = 5.08
8	15.46	2.54 x 3 = 7.62
10	18.00	2.54 x 4 = 10.16
14	23.08	2.54 x 6 = 15.24
16	25.62	2.54 x 7 = 17.78
20	30.74	2.54 x 9 = 22.86
24	35.78	2.54 x 11 = 27.94
26	38.32	2.54 x 12 = 30.48
30	43.40	2.54 x 14 = 35.56
34	48.48	2.54 x 16 = 40.64
40	56.10	2.54 x 19 = 48.26
50	68.80	2.54 x 24 = 60.96
60	81.50	2.54 x 29 = 73.66
64	86.58	2.54 x 31 = 78.74

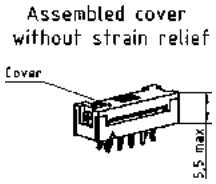

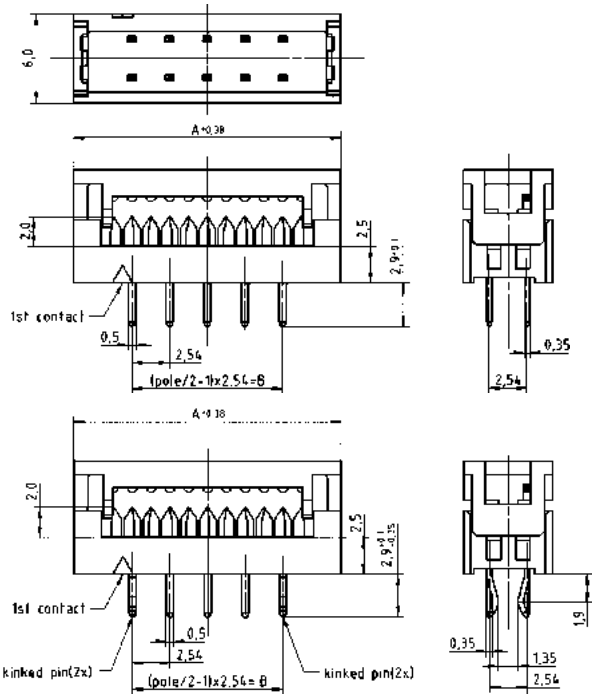

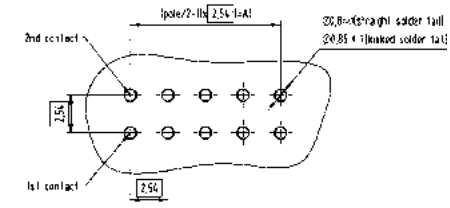

Not released for halogen free flat cables

Number of contacts

4–64

Strain relief clamp

Identification	No. of contacts	Part number
Strain relief clamp	4	98 18 104 9002*
	6	98 18 106 9002*
	8	98 18 108 9002*
	10	98 18 110 9002*
	14	98 18 114 9002*
	16	98 18 116 9002*
	20	98 18 120 9002*
	24	98 18 124 9002*
	26	98 18 126 9002*
	30	98 18 130 9002*
	34	98 18 134 9002*
	40	98 18 140 9002
	50	98 18 150 9002*
	60	98 18 160 9002
	64	98 18 164 9002*

Drawing

Dimensions in mm

No. of contacts	A	B	C
4	10.38	8.58	5.98
6	12.92	11.12	8.52
8	15.46	13.66	11.06
10	18.00	16.20	13.60
14	23.08	21.28	18.68
16	25.62	23.82	21.22
20	30.70	28.90	26.30
24	35.78	33.98	31.38
26	38.32	36.52	33.92
30	43.40	41.60	39.00
34	48.48	46.68	44.08
40	56.10	54.30	51.70
50	68.80	67.00	64.40
60	81.50	79.70	77.10
64	86.58	84.78	82.18

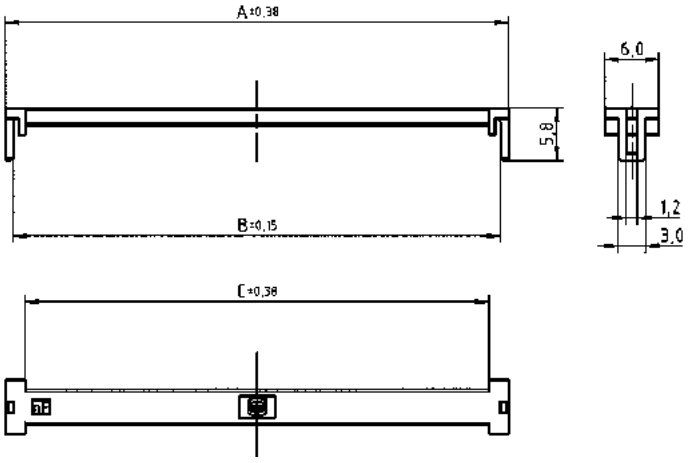

* Available on request

Number of contacts*	10, 16, 20, 26, 34, 40, 50
Pitch	On pcb side: 2.54 mm [0.100“] On cable side: 1.27 mm [0.050“]
Working current	1 A
Test voltage $U_{r.m.s.}$	500 V
Contact resistance Insulation resistance	≤ 20 mΩ ≥ 10^{12} Ω
Temperature range	-40 °C … +125 °C The maximum temperature includes heating of contacts and ambient temperature
Terminations	Solder pins 0.45 mm x 0.35 mm for pcb hole Ø 0.8 mm Diagonal: 0.58 mm IDC flat cable 1.27 mm [0.050“] pitch: AWG 28/7
Materials Moulding	 Thermoplastic resin (PC) UL 94-V0

* Others on request

Number of contacts

10–50

Pcb transition connector, 4 rows

Identification	No. of contacts	Part number
Pcb transition connector[2)]		
4 rows	10	09 19 010 9643*
	16	09 19 016 9643*
	20	09 19 020 9643*
	26	09 19 026 9643*
	34	09 19 034 9643*
	40	09 19 040 9643*
	50	09 19 050 9643*

Drawing

Dimensions in mm

No. of contacts	A	B
10	17.78	1.27 x 9 = 11.43
16	25.40	1.27 x 15 = 19.05
20	30.48	1.27 x 19 = 24.13
26	38.10	1.27 x 25 = 31.75
34	48.26	1.27 x 33 = 41.91
40	55.88	1.27 x 39 = 49.53
50	68.58	1.27 x 49 = 62.23

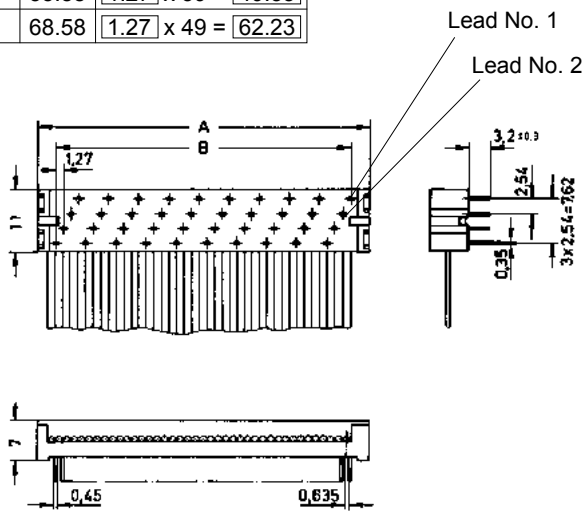

Board drillings

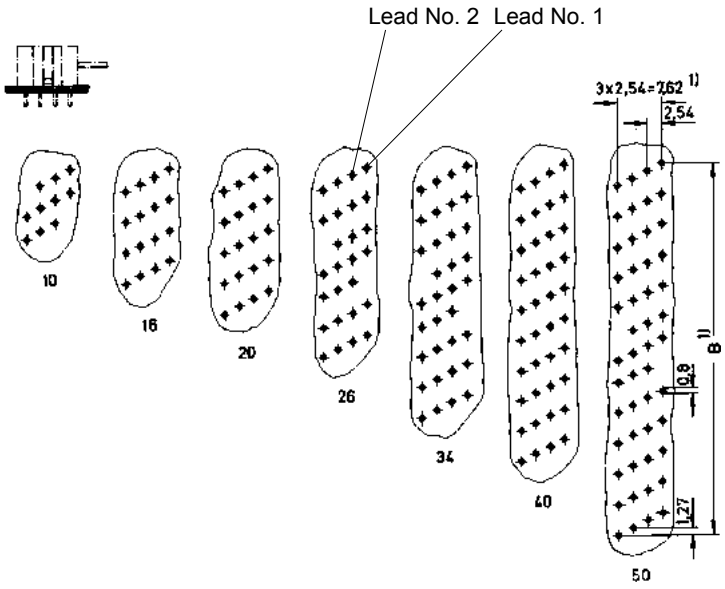

* Not normally kept in stock.
1) Pitch tolerance: ± 0.1
2) Not released for halogen free flat cables

Number of contacts*	14, 16, 24, 28, 40
Pitch	On pcb side: 2.54 mm [0.100“] On cable side: 1.27 mm [0.050“]
Working current	1 A
Test voltage $U_{r.m.s.}$	500 V
Contact resistance Insulation resistance	≤ 20 mΩ ≥ 10^{12} Ω
Temperature range	-40 °C … +125 °C The maximum temperature includes heating of contacts and ambient temperature
Terminations	Solder pins 0.45 mm x 0.35 mm for pcb hole Ø 0.8 mm Diagonal: 0.58 mm IDC flat cable 1.27 mm [0.050“] pitch: AWG 28/7
Materials Moulding	Thermoplastic resin (PC) UL 94-V0

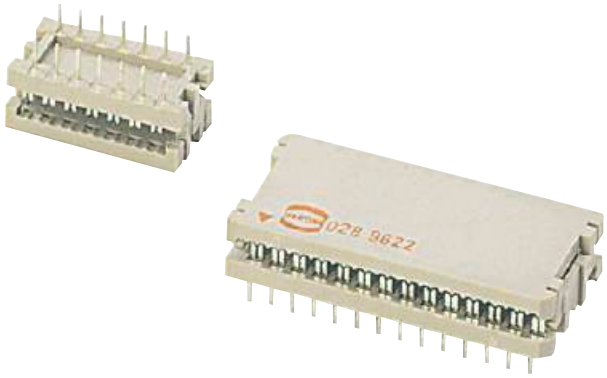

* Others on request

Number of contacts

14–40

DIP connector for IC base or for soldering into pcb

Identification	No. of contacts	Part number
DIP connector[2]	14	09 17 014 9622*
	16	09 17 016 9622*
	24	09 17 024 9622*
	28	09 17 028 9622*
	40	09 17 040 9622*
Board drillings		

Drawing

Dimensions in mm

No. of contacts	A	B	C	D
14	20.5	2.54 x 6 = 15.24	11	7.62
16	23.0	2.54 x 7 = 17.78	11	7.62
24	33.0	2.54 x 11 = 27.94	18.7	15.24
28	38.1	2.54 x 13 = 33.02	18.7	15.24
40	53.3	2.54 x 19 = 48.26	18.7	15.24

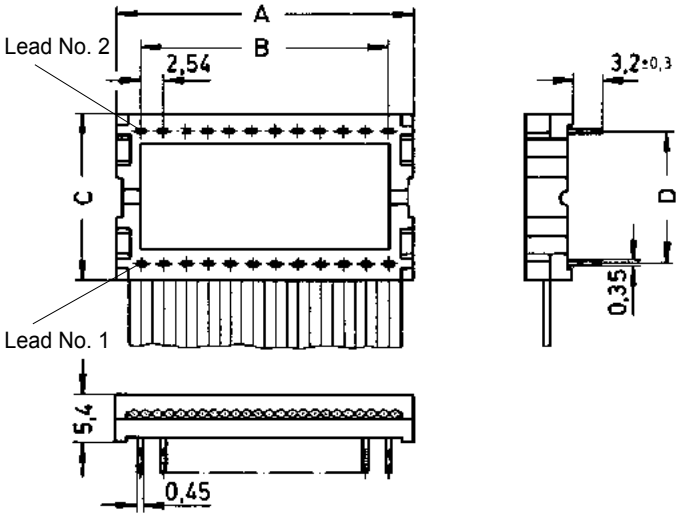

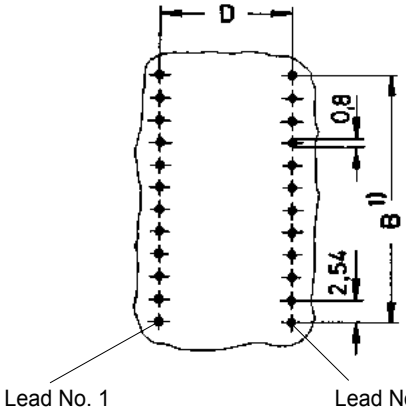

* Not normally kept in stock
1) Pitch tolerance: ± 0.1
2) Not released for halogen free flat cables

Number of contacts	64
Pitch	2.54 mm [0.100“]
Working current	1 A max.
Clearance Creepage	≥ 1.2 mm ≥ 1.2 mm
Working voltage	
The working voltage also depends on the clearance and creepage dimensions of the pcb itself, and the associated wiring	according to the safety regulations of the equipment
Test voltage $U_{r.m.s.}$	1 kV
Contact resistance Insulation resistance	≤ 20 mΩ ≥ 10^{12} Ω
Temperature range	-55 °C … +125 °C The maximum temperature includes heating of contacts and ambient temperature
Termination	
Female connector	Insulation displacement: AWG 28/7
Insertion and withdrawal force	≤ 60 N
Materials	
Moulding	Thermoplastic resin, glass-fibre filled, UL 94-V0
Contacts	Copper alloy
Contact surface	
Contact zone	selectively plated according to performance level

Number of contacts

64

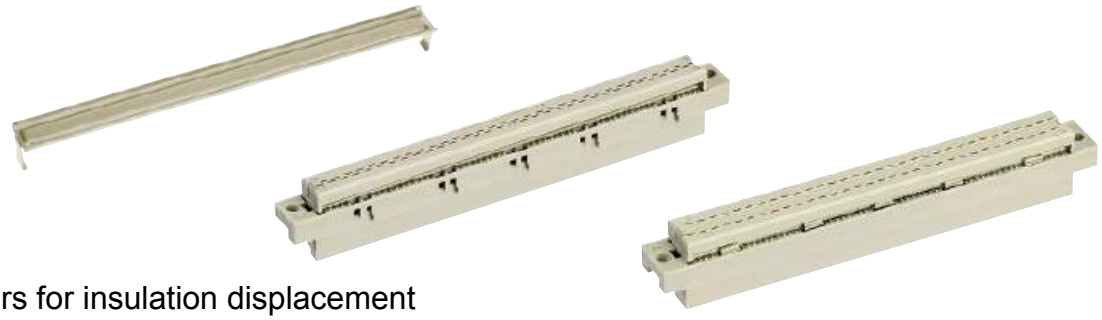

Female connectors for insulation displacement

Identification	No. of contacts	Part number	Drawing	Dimensions in mm
Female connector for insulation displacement				
		performance level 2		
Type B	64	09 02 264 6828		
		performance level 3		
		09 02 264 7828		
			Lead number 1 of flat cable on contact 1 b	
			Contact arrangement View from termination side	
Type C	64	performance level 2		
		09 03 264 6828		
		09 03 764 6828 c)		
		performance level 3		
		09 03 264 7828		
			Lead number 1 of flat cable on contact 1 c	
			Contact arrangement View from termination side	
			Mateable with 3-row male connector Type C. No female contact in middle row.	
			Panel cut out	
Strain relief for types B and C		09 03 000 9940		

	a	b
Type B	8.3	10.16
Type C	10.8	12.7

Male connectors see DIN 41612 catalogue

c) Connectors with coding

Number of contacts	6, 10, 14, 16, 20, 26, 34, 40, 50, 60, 64
Contact arrangement	straight
Contact length	5.5 mm
Approvals	IEC 60603-13 DIN EN 60603-13 D 2632 BT 224 NFC 93-428 (HE 10) UL recognized: E102079
Pitch	2.54 mm [0.100“]
Working current	1 A
Test voltage $U_{r.m.s.}$	1 kV
Contact resistance	≤ 20 mΩ
Insulation resistance	≥ 10^9 Ω
Temperature range	-55 °C … +105 °C The maximum temperature includes heating of contacts and ambient temperature
Press-in	
Diameter of pcb plated through holes	Ø 1.0 $^{+0.09}_{-0.06}$ mm
Recommended pcb holes for press-in process	Hole: Ø 1.12 – 1.15 mm Cu : 25 – 75 µm Sn : 5 – 15 µm
Pcb thickness	1.6 – 3.2 mm
Materials	
Moulding	Thermoplastic resin (PBT) UL 94-V0
Contact surface	
Contact zone	plated according to performance level[1)]

Insertion and withdrawal forces

Number of contacts	Maximum force [N]	
	Performance level 1 and 2	Performance level 3
6	12	18
10	20	30
14	28	42
16	32	48
20	40	60
26	52	78
34	68	102
40	80	120
50	100	150
60	120	180
64	128	192

[1)] Performance level 3 as per IEC 60603-13, ≥ 50 mating cycles, no gas test
Performance level 2 as per IEC 60603-13, ≥ 250 mating cycles, 4 days gas test
S4, plating = 0.76 µm (30 µinch) Au or PdNi eqivalent

Number of contacts

6–64

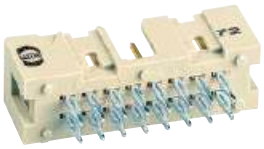

Low-profile male header, straight press-in pins

Identification	No. of contacts	Part number
Low-profile male header with straight press-in terminations Length: 5.5 mm	6	09 18 506 ⌴ 329
	10	09 18 510 ⌴ 329
	14	09 18 514 ⌴ 329
	16	09 18 516 ⌴ 329
	20	09 18 520 ⌴ 329
	26	09 18 526 ⌴ 329
	34	09 18 534 ⌴ 329
	40	09 18 540 ⌴ 329
	50	09 18 550 ⌴ 329
	60	09 18 560 ⌴ 329
	64	09 18 564 ⌴ 329

Drawing

Dimensions in mm

No. of contacts	A	B	E
6	15.2	12.78	2.54 x 2 = 5.08
10	20.3	17.86	2.54 x 4 = 10.16
14	25.4	22.94	2.54 x 6 = 15.24
16	27.9	25.48	2.54 x 7 = 17.78
20	33.0	30.56	2.54 x 9 = 22.86
26	40.6	38.18	2.54 x 12 = 30.48
34	50.8	48.34	2.54 x 16 = 40.64
40	58.4	55.96	2.54 x 19 = 48.26
50	71.3	68.66	2.54 x 24 = 60.96
60	84.0	81.36	2.54 x 29 = 73.66
64	89.1	86.44	2.54 x 31 = 78.74

Marking No. 1 contact

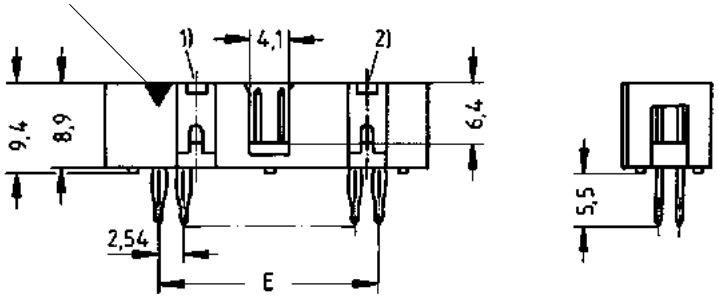

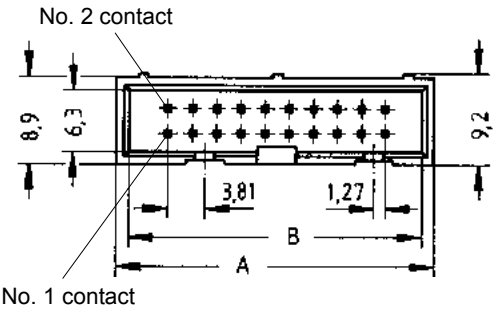

Board drillings

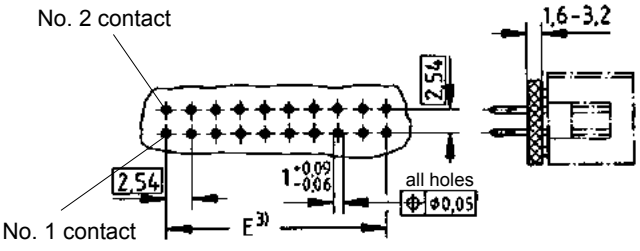

For Performance Level 3 please specify digit
For Performance Level 2 please specify digit
S4 = 0.76 µm (30 µinch) Au or PdNi eqivalent

7
6
5 Not normally kept in stock

1) No polarization slot for 6, 10 or 14 way
2) No polarization slot for 6 way
3) Pitch tolerance: ± 0.1

Number of contacts	6, 10, 14, 16, 20, 24, 26, 30, 34, 40, 50, 60, 64
Contact arrangement	straight, angled
Contact length	2.9 mm
Approvals	IEC 60603-13 DIN EN 60603-13 D 2632 BT 224 NFC 93-428 (HE 10)
Pitch	2.54 mm [0.100"]
Working current	1 A
Working voltage	500 V for pollution degree 1
Test voltage $U_{r.m.s.}$	1 kV
Contact resistance Insulation resistance	≤ 20 mΩ ≥ 10^9 Ω
Temperature range	-55 °C … +125 °C
during reflow soldering	max. + 240 °C for 60 s
The higher temperature limit includes the local ambient and heating effect of the contacts under load	
Terminations	For pcb hole Ø 1 ± 0.1 mm DIN IEC 52141 Diagonal: 0.79 mm
Materials	
Moulding	Thermoplastic resin (PCT) UL 94-V0
Contact surface	
Contact zone	gold-plated according to performance level[1)]
Options on request	
Colour of connectors	black
For pick & place process	Tape & Reel packaging with/without vacuum plate Tube packaging with/without vacuum plate

New

Insertion and withdrawal forces

Number of contacts	Maximum force [N]	
	Performance level 1 and 2	Performance level 3
6	12	18
10	20	30
14	28	42
16	32	48
20	40	60
24	48	72
26	52	78
30	60	90
34	68	102
40	80	120
50	100	150
60	120	180
64	128	192

[1)] Performance level 3 as per IEC 60603-13, ≥ 50 mating cycles, no gas test
Performance level 2 as per IEC 60603-13, ≥ 250 mating cycles, 4 days gas test
S4, plating = 0.76 µm (30 µinch) Au or PdNi eqivalent

Notes

Number of contacts

6–64

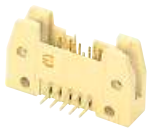
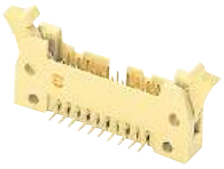
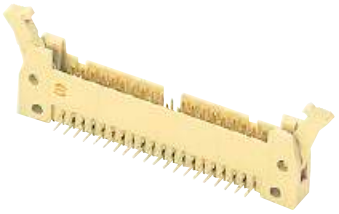

SMC male header with angled solder pins

Identification	No. of contacts	Part number ← Without levers	With short levers	With long levers →
SMC male header with angled solder pins Length: 2.9 mm	6	09 19 506 ⌴ 923	09 19 506 ⌴ 913	09 19 506 ⌴ 903
	10	09 19 510 ⌴ 923	09 19 510 ⌴ 913	09 19 510 ⌴ 903
	14	09 19 514 ⌴ 923	09 19 514 ⌴ 913	09 19 514 ⌴ 903
	16	09 19 516 ⌴ 923	09 19 516 ⌴ 913	09 19 516 ⌴ 903
	20	09 19 520 ⌴ 923	09 19 520 ⌴ 913	09 19 520 ⌴ 903
	24	09 19 524 ⌴ 923	09 19 524 ⌴ 913	09 19 524 ⌴ 903
	26	09 19 526 ⌴ 923	09 19 526 ⌴ 913	09 19 526 ⌴ 903
	30	09 19 530 ⌴ 923	09 19 530 ⌴ 913	09 19 530 ⌴ 903
	34	09 19 534 ⌴ 923	09 19 534 ⌴ 913	09 19 534 ⌴ 903
	40	09 19 540 ⌴ 923	09 19 540 ⌴ 913	09 19 540 ⌴ 903
	50	09 19 550 ⌴ 923	09 19 550 ⌴ 913	09 19 550 ⌴ 903
	60	09 19 560 ⌴ 923	09 19 560 ⌴ 913	09 19 560 ⌴ 903
	64	09 19 564 ⌴ 923	09 19 564 ⌴ 913	09 19 564 ⌴ 903

Kinked version on request

* Not normally kept in stock
For accessories see page 08.48
For dimensions see page 08.39

For performance level 3 please specify digit 7 *
For performance level 2 please specify digit 6 *
S4 = 0.76 µm (30 µinch) Au or PdNi eqivalent 5 *

Number of contacts

6–64

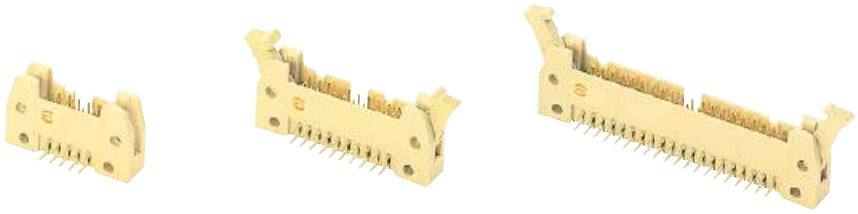

SMC male header with angled solder pins

Identification	Drawing	Dimensions in mm

SMC male header

No. of contacts	A	B	D	E	F	G
6	26.9	16.76	12.45	2.54 x 2 = 5.08	36.9	40.3
10	32.0	21.84	17.53	2.54 x 4 = 10.16	42.0	45.4
14	37.1	26.92	22.61	2.54 x 6 = 15.24	47.1	50.4
16	39.6	29.46	25.15	2.54 x 7 = 17.78	49.6	53.0
20	44.7	34.54	30.23	2.54 x 9 = 22.86	54.7	58.1
24	49.8	39.62	35.91	2.54 x 11 = 27.94	59.8	63.2
26	52.3	42.16	37.85	2.54 x 12 = 30.48	62.3	65.7
30	57.7	47.24	43.83	2.54 x 14 = 35.56	68.2	68.6
34	62.5	52.32	48.01	2.54 x 16 = 40.64	72.5	75.8
40	70.1	59.94	55.63	2.54 x 19 = 48.26	80.1	83.5
50	82.8	72.64	68.33	2.54 x 24 = 60.96	92.8	96.2
60	95.5	85.34	81.03	2.54 x 29 = 73.66	105.5	108.9
64	100.6	90.42	86.11	2.54 x 31 = 78.74	110.6	113.9

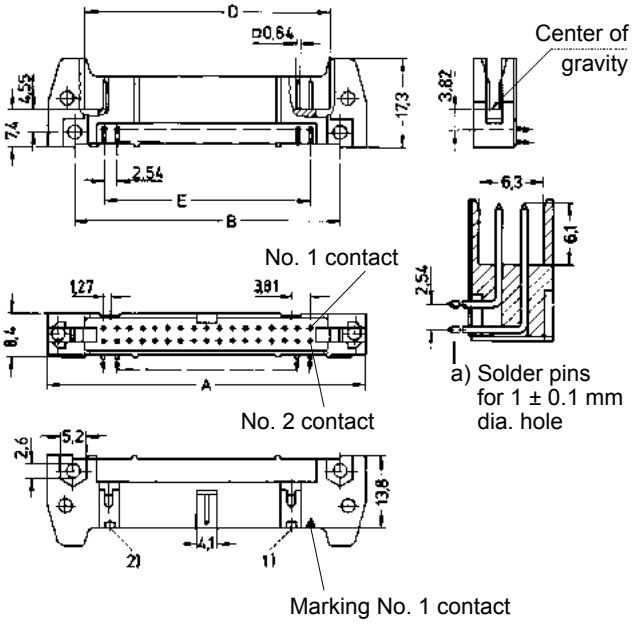

Short levers

for use with female connector without strain relief clamp

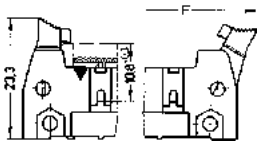

Long levers

for use with female connector with strain relief clamp

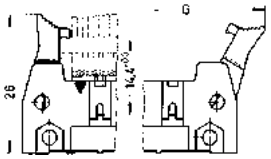

Board drillings

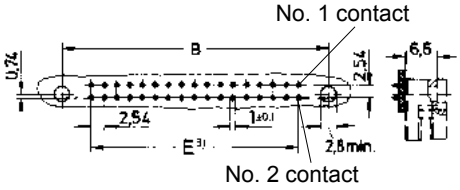

1) No polarization slot for 6, 10 or 14 way male header

2) No polarization slot for 6 way male header

3) Pitch tolerance: ± 0.1

Number of contacts

6–64

SMC male header with straight solder pins

Identification	No. of contacts	Part number ← Without levers	With short levers	With long levers →
SMC male header with straight solder pins Length: 2.9 mm	6	09 19 506 ⌴ 924	09 19 506 ⌴ 914	09 19 506 ⌴ 904
	10	09 19 510 ⌴ 924	09 19 510 ⌴ 914	09 19 510 ⌴ 904
	14	09 19 514 ⌴ 924	09 19 514 ⌴ 914	09 19 514 ⌴ 904
	16	09 19 516 ⌴ 924	09 19 516 ⌴ 914	09 19 516 ⌴ 904
	20	09 19 520 ⌴ 924	09 19 520 ⌴ 914	09 19 520 ⌴ 904
	24	09 19 524 ⌴ 924	09 19 524 ⌴ 914	09 19 524 ⌴ 904
	26	09 19 526 ⌴ 924	09 19 526 ⌴ 914	09 19 526 ⌴ 904
	30	09 19 530 ⌴ 924	09 19 530 ⌴ 914	09 19 530 ⌴ 904
	34	09 19 534 ⌴ 924	09 19 534 ⌴ 914	09 19 534 ⌴ 904
	40	09 19 540 ⌴ 924	09 19 540 ⌴ 914	09 19 540 ⌴ 904
	50	09 19 550 ⌴ 924	09 19 550 ⌴ 914	09 19 550 ⌴ 904
	60	09 19 560 ⌴ 924	09 19 560 ⌴ 914	09 19 560 ⌴ 904
	64	09 19 564 ⌴ 924	09 19 564 ⌴ 914	09 19 564 ⌴ 904

* Not normally kept in stock
For accessories see page 08.48
For dimensions see page 08.41

For performance level 3 please specify digit 7 6 5 *
For performance level 2 please specify digit 7 6 5 *
S4 = 0.76 µm (30 µinch) Au or PdNi eqivalent 7 6 5 *

Number of contacts

6–64

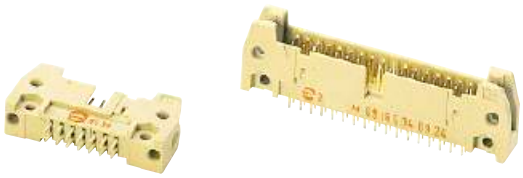

SMC male header with straight solder pins

Identification | Drawing | Dimensions in mm

SMC male header

No. of contacts	A	C	D	E	F	G
6	26.9	22.86	12.45	2.54 x 2 = 5.08	36.9	40.3
10	32.0	27.94	17.53	2.54 x 4 = 10.16	42.0	45.4
14	37.1	33.02	22.61	2.54 x 6 = 15.24	47.1	50.4
16	39.6	35.56	25.15	2.54 x 7 = 17.78	49.6	53.0
20	44.7	40.64	30.23	2.54 x 9 = 22.86	54.7	58.1
24	49.8	45.72	35.91	2.54 x 11 = 27.94	59.8	63.2
26	52.3	48.26	37.85	2.54 x 12 = 30.48	62.3	65.7
30	57.7	53.34	43.83	2.54 x 14 = 35.56	68.2	68.6
34	62.5	58.42	48.01	2.54 x 16 = 40.64	72.5	75.8
40	70.1	66.04	55.63	2.54 x 19 = 48.26	80.1	83.5
50	82.8	78.74	68.33	2.54 x 24 = 60.96	92.8	96.2
60	95.5	91.44	81.03	2.54 x 29 = 73.66	105.5	108.9
64	100.6	96.52	86.11	2.54 x 31 = 78.74	110.6	113.9

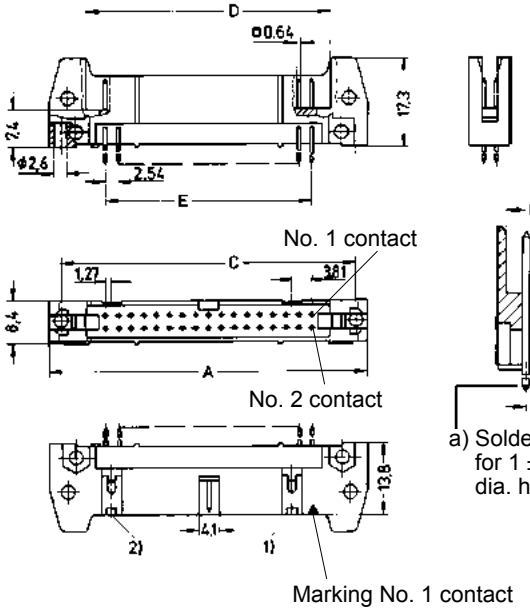

Short levers
for use with female connector without strain relief clamp

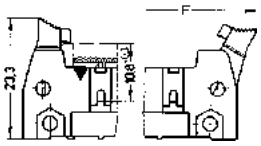

Long levers
for use with female connector with strain relief clamp

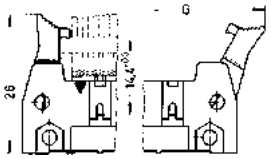

Board drillings

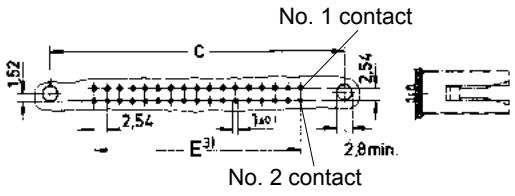

1) No polarization slot for 6, 10 or 14 way male header
2) No polarization slot for 6 way male header
3) Pitch tolerance: ± 0.1

Number of contacts

6–64

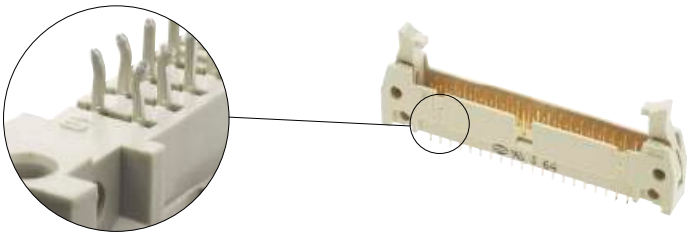

SMC male header with straight solder pins, kinked

Identification	No. of contacts	Part number Without levers	With short levers	With long levers
SMC male header with straight solder pins, kinked Length: 2.9 mm	6	09 19 506 ⌴ 024	09 19 506 ⌴ 014	09 19 506 ⌴ 004
	10	09 19 510 ⌴ 024	09 19 510 ⌴ 014	09 19 510 ⌴ 004
	14	09 19 514 ⌴ 024	09 19 514 ⌴ 014	09 19 514 ⌴ 004
	16	09 19 516 ⌴ 024	09 19 516 ⌴ 014	09 19 516 ⌴ 004
	20	09 19 520 ⌴ 024	09 19 520 ⌴ 014	09 19 520 ⌴ 004
	24	09 19 524 ⌴ 024	09 19 524 ⌴ 014	09 19 524 ⌴ 004
	26	09 19 526 ⌴ 024	09 19 526 ⌴ 014	09 19 526 ⌴ 004
	30	09 19 530 ⌴ 024	09 19 530 ⌴ 014	09 19 530 ⌴ 004
	34	09 19 534 ⌴ 024	09 19 534 ⌴ 014	09 19 534 ⌴ 004
	40	09 19 540 ⌴ 024	09 19 540 ⌴ 014	09 19 540 ⌴ 004
	50	09 19 550 ⌴ 024	09 19 550 ⌴ 014	09 19 550 ⌴ 004
	60	09 19 560 ⌴ 024	09 19 560 ⌴ 014	09 19 560 ⌴ 004
	64	09 19 564 ⌴ 024	09 19 564 ⌴ 014	09 19 564 ⌴ 004

* Not normally kept in stock
For accessories see page 08.48
For dimensions see page 08.43

For performance level 3 please specify digit 7 *
For performance level 2 please specify digit 6 *
S4 = 0.76 µm (30 µinch) Au or PdNi eqivalent 5 *

Number of contacts

6–64

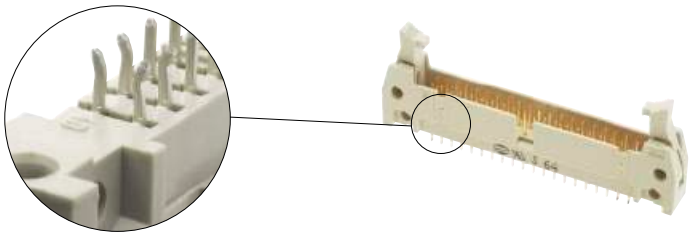

SMC male header with straight solder pins, kinked

Identification | Drawing | Dimensions in mm

SMC male header

No. of contacts	A	C	D	E	F	G
6	26.9	22.86	12.45	2.54 x 2 = 5.08	36.9	40.3
10	32.0	27.94	17.53	2.54 x 4 = 10.16	42.0	45.4
14	37.1	33.02	22.61	2.54 x 6 = 15.24	47.1	50.4
16	39.6	35.56	25.15	2.54 x 7 = 17.78	49.6	53.0
20	44.7	40.64	30.23	2.54 x 9 = 22.86	54.7	58.1
24	49.8	45.72	35.91	2.54 x 11 = 27.94	59.8	63.2
26	52.3	48.26	37.85	2.54 x 12 = 30.48	62.3	65.7
30	57.7	53.34	43.83	2.54 x 14 = 35.56	68.2	68.6
34	62.5	58.42	48.01	2.54 x 16 = 40.64	72.5	75.8
40	70.1	66.04	55.63	2.54 x 19 = 48.26	80.1	83.5
50	82.8	78.74	68.33	2.54 x 24 = 60.96	92.8	96.2
60	95.5	91.44	81.03	2.54 x 29 = 73.66	105.5	108.9
64	100.6	96.52	86.11	2.54 x 31 = 78.74	110.6	113.9

Short levers

for use with female connector without strain relief clamp

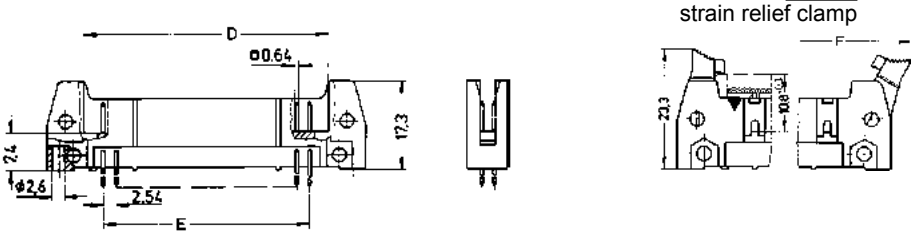

Long levers

for use with female connector with strain relief clamp

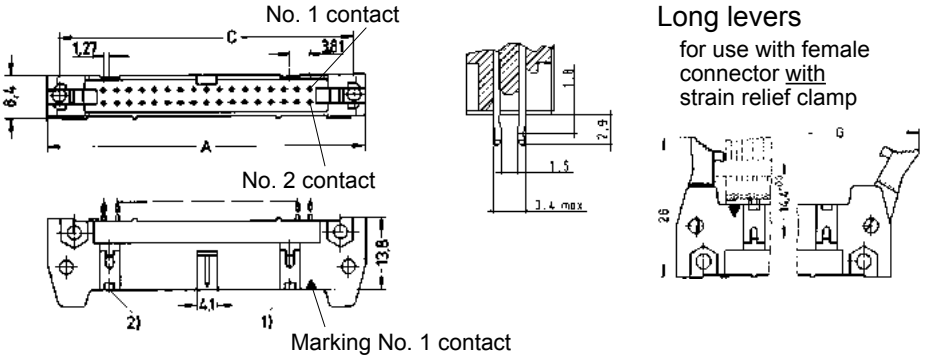

Board drillings

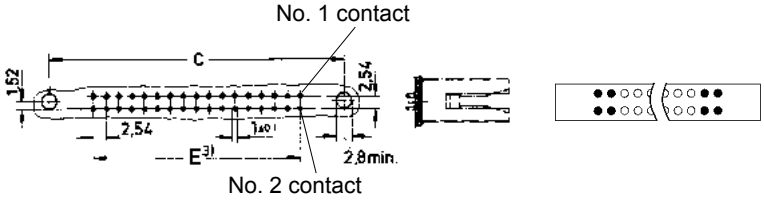

● Kinked contact: pcb thickness from 1.50 to 1.94 mm after Cu + Sn plating with non-remelted through holes ø 0.80 to ø 0.95 mm. Max. insertion force = 125 N. Min. retention force = 6 N.

○ Non-kinked contact: Solder pins for pcb connections ø 1 ± 0.1 mm as per IEC 60603-13.

1) No polarization slot for 6, 10 or 14 way male header

2) No polarization slot for 6 way male header

3) Pitch tolerance: ± 0.1

Number of contacts

6–64

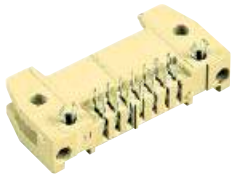

SMC male header with angled solder pins and board lock

Identification	No. of contacts	Part number ← Without levers	With short levers	With long levers →
SMC male header with angled solder pins and pcb board lock Length: 2.9 mm for 1.6 mm pcb thickness	6	09 19 506 ␣ 973*	09 19 506 ␣ 963*	09 19 506 ␣ 953*
	10	09 19 510 ␣ 973*	09 19 510 ␣ 963*	09 19 510 ␣ 953*
	14	09 19 514 ␣ 973*	09 19 514 ␣ 963*	09 19 514 ␣ 953*
	16	09 19 516 ␣ 973*	09 19 516 ␣ 963*	09 19 516 ␣ 953*
	20	09 19 520 ␣ 973*	09 19 520 ␣ 963*	09 19 520 ␣ 953*
To hold the connector on the pcb before the soldering process, two board locks have been added on the male header with angled solder pins.	24	09 19 524 ␣ 973*	09 19 524 ␣ 963*	09 19 524 ␣ 953*
	26	09 19 526 ␣ 973*	09 19 526 ␣ 963*	09 19 526 ␣ 953*
	30	09 19 530 ␣ 973*	09 19 530 ␣ 963*	09 19 530 ␣ 953*
	34	09 19 534 ␣ 973*	09 19 534 ␣ 963*	09 19 534 ␣ 953*
	40	09 19 540 ␣ 973*	09 19 540 ␣ 963*	09 19 540 ␣ 953*
	50	09 19 550 ␣ 973*	09 19 550 ␣ 963*	09 19 550 ␣ 953*
	60	09 19 560 ␣ 973*	09 19 560 ␣ 963*	09 19 560 ␣ 953*
	64	09 19 564 ␣ 973*	09 19 564 ␣ 963*	09 19 564 ␣ 953*

* Not normally kept in stock

For performance level 3 please specify digit 7
For performance level 2 please specify digit 6
S4 = 0.76 µm (30 µinch) Au or PdNi eqivalent 5

Number of contacts

6–64

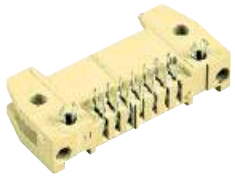

SMC male header with angled solder pins and board lock

Identification

SMC male header

Drawing

Dimensions in mm

No. of contacts	A	B	D	E	F	G
6	26.9	16.76	12.45	2.54 x 2 = 5.08	36.9	40.3
10	32.0	21.84	17.53	2.54 x 4 = 10.16	42.0	45.4
14	37.1	26.92	22.61	2.54 x 6 = 15.24	47.1	50.4
16	39.6	29.46	25.15	2.54 x 7 = 17.78	49.6	53.0
20	44.7	34.54	30.23	2.54 x 9 = 22.86	54.7	58.1
24	49.8	39.62	35.91	2.54 x 11 = 27.94	59.8	63.2
26	52.3	42.16	37.85	2.54 x 12 = 30.48	62.3	65.7
30	57.7	47.24	43.83	2.54 x 14 = 35.56	68.2	68.6
34	62.5	52.32	48.01	2.54 x 16 = 40.64	72.5	75.8
40	70.1	59.94	55.63	2.54 x 19 = 48.26	80.1	83.5
50	82.8	72.64	68.33	2.54 x 24 = 60.96	92.8	96.2
60	95.5	85.34	81.03	2.54 x 29 = 73.66	105.5	108.9
64	100.6	90.42	86.11	2.54 x 31 = 78.74	110.6	113.9

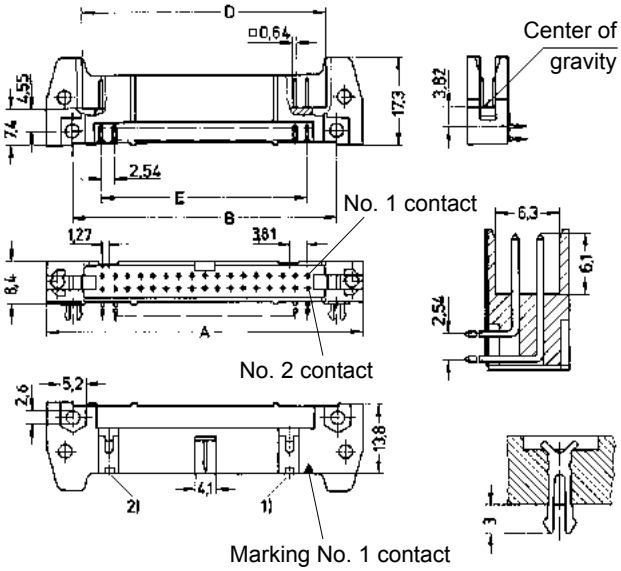

Short levers

for use with female connector without strain relief clamp

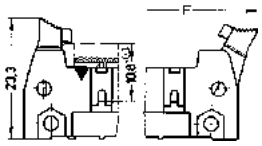

Long levers

for use with female connector with strain relief clamp

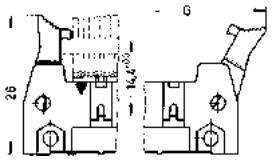

Board drillings

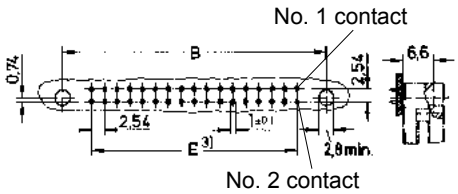

For accessories see page 08.48

1) No polarization slot for 6, 10 or 14 way male header

2) No polarization slot for 6 way male header

3) Pitch tolerance: ± 0.1

Number of contacts

6–64

Tape & Reel packaging

SMC low-profile male header, angled solder pins

Identification	No. of contacts	Part number
SMC male header with angled solder pins		
Length: 2.9 mm Colour: Beige Packaging: Carton	6	09 19 506 ⌴ 323
	10	09 19 510 ⌴ 323
	14	09 19 514 ⌴ 323
	16	09 19 516 ⌴ 323
	20	09 19 520 ⌴ 323
	26	09 19 526 ⌴ 323
	30	09 19 530 ⌴ 323
	34	09 19 534 ⌴ 323
	40	09 19 540 ⌴ 323
	50	09 19 550 ⌴ 323
	60	09 19 560 ⌴ 323
	64	09 19 564 ⌴ 323
Colour: Beige Packaging: Tape & Reel Vacuum plate for pick & place process	6	09 19 506 ⌴ 323 740
	10	09 19 510 ⌴ 323 740
	14	09 19 514 ⌴ 323 740
	16	09 19 516 ⌴ 323 740
	20	09 19 520 ⌴ 323 740
	26	09 19 526 ⌴ 323 740
	30	09 19 530 ⌴ 323 740
	34	09 19 534 ⌴ 323 740
	40	09 19 540 ⌴ 323 740
Colour: Black Packaging: Tape & Reel Vacuum plate for pick & place process	6	09 19 506 ⌴ 323 741
	10	09 19 510 ⌴ 323 741
	14	09 19 514 ⌴ 323 741
	16	09 19 516 ⌴ 323 741
	20	09 19 520 ⌴ 323 741
	26	09 19 526 ⌴ 323 741
	30	09 19 530 ⌴ 323 741
	34	09 19 534 ⌴ 323 741
	40	09 19 540 ⌴ 323 741

For performance level 3 please specify digit 7
For performance level 2 please specify digit 6
S4 = 0.76 µm (30 µinch) Au or PdNi eqivalent 5 *

Drawing

No. of contacts	A	B	E
6	15.2	12.78	2.54 x 2 = 5.08
10	20.3	17.86	2.54 x 4 = 10.16
14	25.4	22.94	2.54 x 6 = 15.24
16	27.9	25.48	2.54 x 7 = 17.78
20	33.0	30.56	2.54 x 9 = 22.86
26	40.6	38.18	2.54 x 12 = 30.48
30	45.72	43.26	2.54 x 14 = 35.56
34	50.8	48.34	2.54 x 16 = 40.64
40	58.4	55.96	2.54 x 19 = 48.26
50	71.3	68.66	2.54 x 24 = 60.96
60	84.0	81.36	2.54 x 29 = 73.66
64	89.1	86.44	2.54 x 31 = 78.74

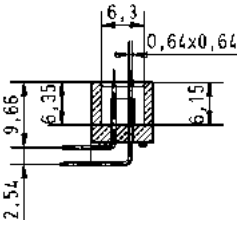

Solder pins for 1 ± 0.1 mm dia. hole

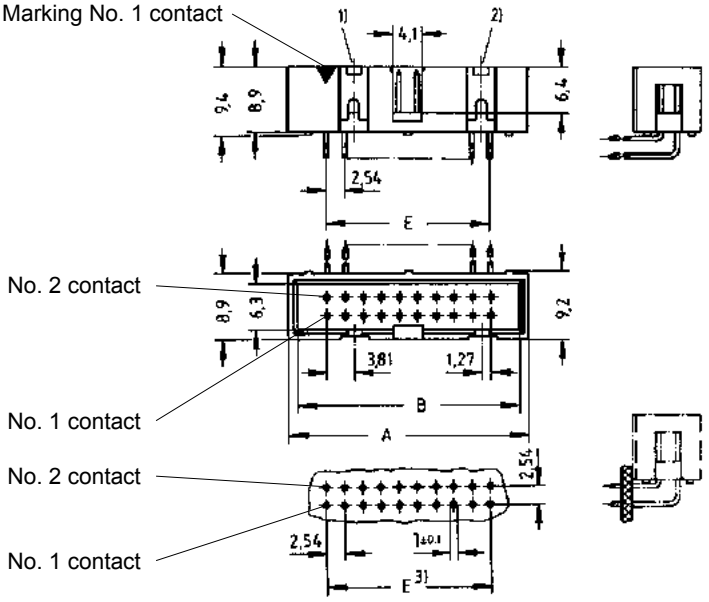

Identification	Part number	Drawing
Locking lever for female connector with strain relief in conjunction with low-profile male header	09 18 000 9905 4)	Strain relief clamp Female connector Low-profile male header

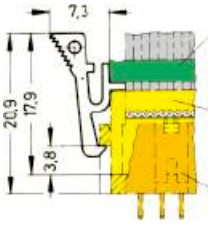

When the security of latching is required and space is a premium, these locking levers can be fitted onto the strain relief of the HARTING female connector.

* Not normally kept in stock

1) No polarization slot for 6, 10 or 14 way male header
2) No polarization slot for 6 way male header
3) Pitch tolerance: ± 0.1
4) Order 2 per female connector

Number of contacts

6–64

Tape & Reel packaging

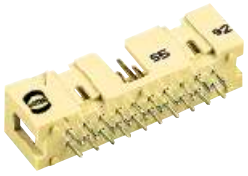

SMC low-profile male header, straight solder pins

Identification	No. of contacts	Part number
SMC male header with straight solder pins Length: 2.9 mm Colour: Beige Packaging: Carton	6	09 19 506 ⌴ 324
	10	09 19 510 ⌴ 324
	14	09 19 514 ⌴ 324
	16	09 19 516 ⌴ 324
	20	09 19 520 ⌴ 324
	26	09 19 526 ⌴ 324
	30	09 19 530 ⌴ 324
	34	09 19 534 ⌴ 324
	40	09 19 540 ⌴ 324
	50	09 19 550 ⌴ 324
	60	09 19 560 ⌴ 324
	64	09 19 564 ⌴ 324
Colour: Beige Packaging: Tape & Reel Vacuum plate for pick & place process	6	09 19 506 ⌴ 324 740
	10	09 19 510 ⌴ 324 740
	14	09 19 514 ⌴ 324 740
	16	09 19 516 ⌴ 324 740
	20	09 19 520 ⌴ 324 740
	26	09 19 526 ⌴ 324 740
	30	09 19 530 ⌴ 324 740
	34	09 19 534 ⌴ 324 740
	40	09 19 540 ⌴ 324 740
Colour: Black Packaging: Tape & Reel Vacuum plate for pick & place process	6	09 19 506 ⌴ 324 741
	10	09 19 510 ⌴ 324 741
	14	09 19 514 ⌴ 324 741
	16	09 19 516 ⌴ 324 741
	20	09 19 520 ⌴ 324 741
	26	09 19 526 ⌴ 324 741
	30	09 19 530 ⌴ 324 741
	34	09 19 534 ⌴ 324 741
	40	09 19 540 ⌴ 324 741

For performance level 3 please specify digit 7
For performance level 2 please specify digit 6
S4 = 0.76 µm (30 µinch) Au or PdNi eqivalent 5 *

Drawing

No. of contacts	A	B	E
6	15.2	12.78	2.54 x 2 = 5.08
10	20.3	17.86	2.54 x 4 = 10.16
14	25.4	22.94	2.54 x 6 = 15.24
16	27.9	25.48	2.54 x 7 = 17.78
20	33.0	30.56	2.54 x 9 = 22.86
26	40.6	38.18	2.54 x 12 = 30.48
30	45.72	43.26	2.54 x 14 = 35.56
34	50.8	48.34	2.54 x 16 = 40.64
40	58.4	55.96	2.54 x 19 = 48.26
50	71.3	68.66	2.54 x 24 = 60.96
60	84.0	81.36	2.54 x 29 = 73.66
64	89.1	86.44	2.54 x 31 = 78.74

Dimensions in mm

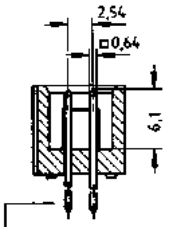

Solder pins for 1 ± 0.1 mm dia. hole

Marking No. 1 contact

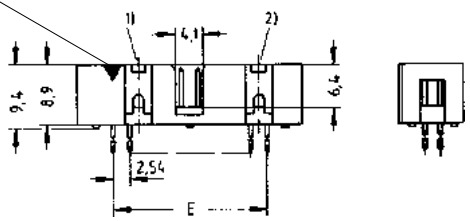

No. 2 contact

No. 1 contact

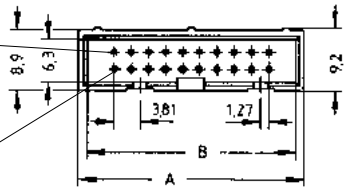

No. 2 contact

No. 1 contact

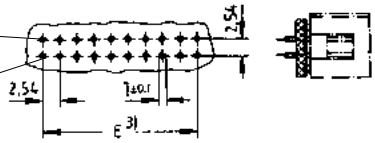

Identification	Part number
Locking lever for female connector with strain relief in conjunction with low-profile male header	09 18 000 9905 4)

Drawing

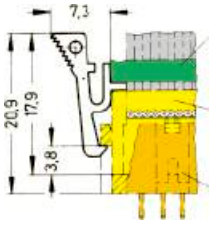

Strain relief clamp

Female connector

Low-profile male header

When the security of latching is required and space is a premium, these locking levers can be fitted onto the strain relief of the HARTING female connector.

Dimensions in mm

* Not normally kept in stock

1) No polarization slot for 6, 10 or 14 way male header
2) No polarization slot for 6 way male header
3) Pitch tolerance: ± 0.1
4) Order 2 per female connector

Accessories

Identification	Part number	Drawing	Dimensions in mm
Polarization key [1] Part number comprises 2 keys	09 18 500 9902[1]	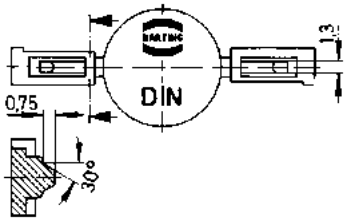	
Locking lever (snaps into place, can be fitted whenever required) [2] Order 2 per male header	Long: 09 19 000 9903[2] Short: 09 19 000 9904[2]	Long 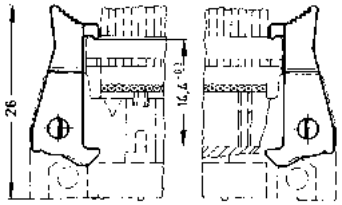 For use with female connector with strain relief clamp Short 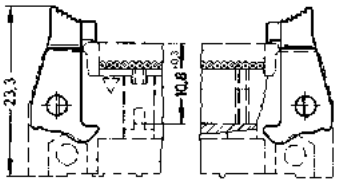 For use with female connector without strain relief clamp	
Fixing screws for 1.6 mm P.C. board [3] Part number comprises 50 pieces	09 18 000 9906[3]	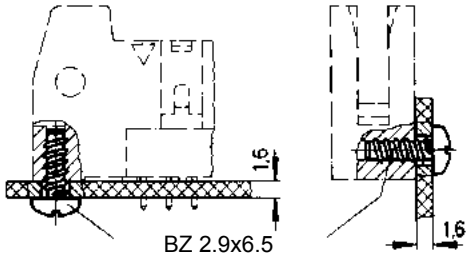 BZ 2.9x6.5 (DIN 7981 or DIN 7049)	For connectors with part numbers 09 18 5xx x9xx: screwing torque 0.2 Nm 09 19 5xx x9xx: screwing torque 0.4 – 0.5 Nm Screw material: Steel (Inox A2) Plating: Nickel
Coding system with loss of contact [4] Part number comprises 6 code pins	Code pin 09 18 000 9901[4] Removal tool for male contacts 09 99 000 0133	To avoid cross-plugging adjacent connectors a coding system is required. A code pin is inserted into the appropriate cavity in the female connector. The corresponding male contact is removed by a special removal tool. 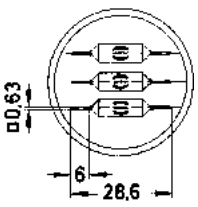 	

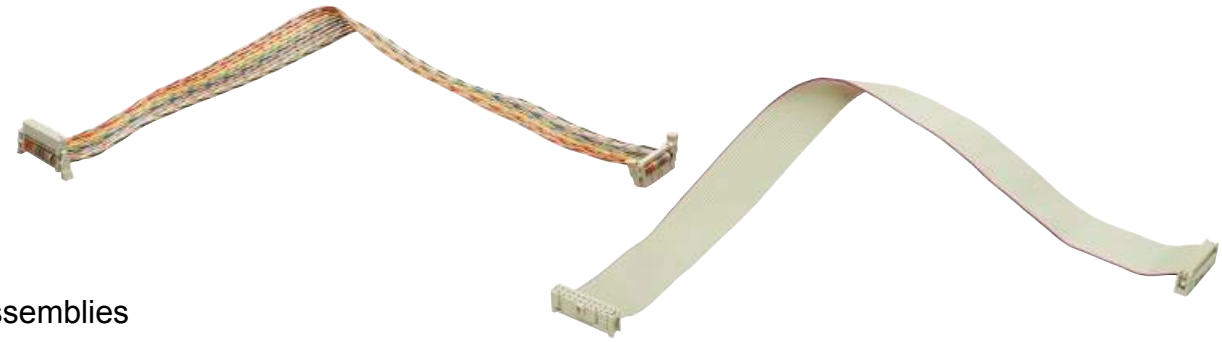

Cable assemblies

Identification	Part number	Drawing	Dimensions in mm
Cable assembly SEK 20-pole Cable: Flat cable, 10 twisted pairs, AWG 28/7, 1.27 mm pitch Wiring: 1:1		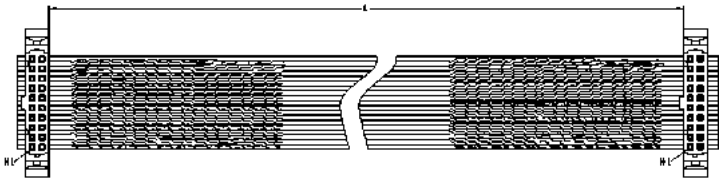	
Length: L = 0.5 m	33 18 243 0500 060		
L = 1.0 m	33 18 243 1000 062		
L = 1.5 m	33 18 243 1500 068		
Cable assembly SEK 40-pole Cable: Flat cable, 20 twisted pairs, AWG 28/7, 1.27 mm pitch Wiring: 1:1		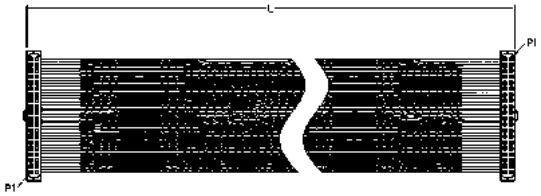	
Length: L = 0.5 m	33 18 243 0500 055		
L = 1.0 m	33 18 243 1000 057		
L = 1.5 m	33 18 243 1500 069		
Cable assembly SEK 10-pole Cable: Flat cable, grey, 10 wires, AWG 28/7, 1.27 mm pitch Wiring: 1:1		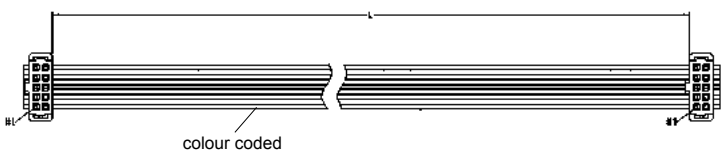	
Length: L = 0.1 m	33 18 243 0100 063		
L = 0.2 m	33 18 243 0200 064		
L = 0.5 m	33 18 243 0500 065		
L = 0.8 m	33 18 243 0800 066		
L = 1.0 m	33 18 243 1000 067		

Cables for insulation displacement termination

Identification	No. of contacts	Part number	Drawing	Dimensions in mm

Flat cable

grey
UL AWM-style 2651
CSA

No. of contacts	Part number
6	09 18 006 700 ⌴
9	09 18 009 700 ⌴
10	09 18 010 700 ⌴
14	09 18 014 700 ⌴
15	09 18 015 700 ⌴
16	09 18 016 700 ⌴
18	09 18 018 700 ⌴
20	09 18 020 700 ⌴
24	09 18 024 700 ⌴
25	09 18 025 700 ⌴
26	09 18 026 700 ⌴
28	09 18 028 700 ⌴
30	09 18 030 700 ⌴
34	09 18 034 700 ⌴
37	09 18 037 700 ⌴
40	09 18 040 700 ⌴
50	09 18 050 700 ⌴
60	09 18 060 700 ⌴
64	09 18 064 700 ⌴

Length per reel

30.48 m (100 feet)	1
100 m (328 feet)	4

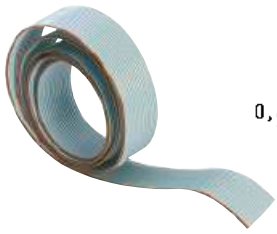

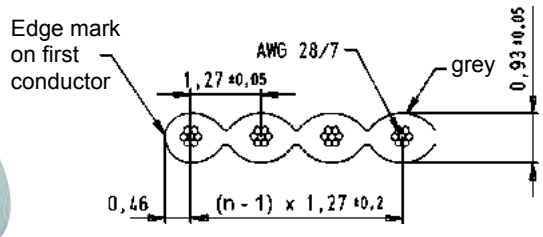

Conductor material	Copper tinned
Gauge	AWG 28/7 0.089 mm²
Voltage rating	300 $V_{r.m.s.}$
Current rating at 25 °C	2.1 A max.
Capacity unbalanced	45.9 pF/m
Impedance unbalanced	105 Ω
Propagation delay	4.9 ns/m nominal
Insulation material	PVC
Temperature rating (operating)	-20 °C … +105 °C
Temperature rating (static)	-30 °C … +105 °C
Flammability rating	UL: VW-1
Insulation resistance	> 100 MΩ/km

Flat cable

grey
non-halogenated
UL style 21447
for VW-1

No. of contacts	Part number
6	09 18 006 700 ⌴900
9	09 18 009 700 ⌴900
10	09 18 010 700 ⌴900
14	09 18 014 700 ⌴900
15	09 18 015 700 ⌴900
16	09 18 016 700 ⌴900
18	09 18 018 700 ⌴900
20	09 18 020 700 ⌴900
24	09 18 024 700 ⌴900
25	09 18 025 700 ⌴900
26	09 18 026 700 ⌴900
28	09 18 028 700 ⌴900
34	09 18 034 700 ⌴900
37	09 18 037 700 ⌴900
40	09 18 040 700 ⌴900
50	09 18 050 700 ⌴900
60	09 18 060 700 ⌴900
64	09 18 064 700 ⌴900

Length per reel

30.48 m (100 feet)	1

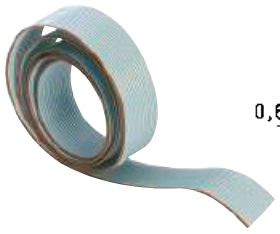

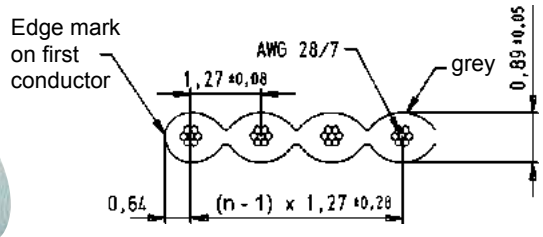

Conductor material	Copper tinned
Gauge	AWG 28/7 0.089 mm²
Voltage rating	300 $V_{r.m.s.}$
Current rating	1.3 A
Capacity unbalanced	42.6 pF/m at 1 MHz
Impedance unbalanced	100 Ω
Inductance	0.56 µH/m
Propagation delay	4.8 ns/m
Insulation material	Non-halogenated flame retardent Polyolefin
Temperature rating	-40 °C … +80 °C
Insulation resistance	10000 MΩ/km

Important: always store reel vertically

Cables for insulation displacement termination

Identification	No. of contacts	Part number	Drawing	Dimensions in mm
Flat cable colour coded Length per reel 30.48 m (100 feet) UL AWM-style 2651	6	09 18 006 7005	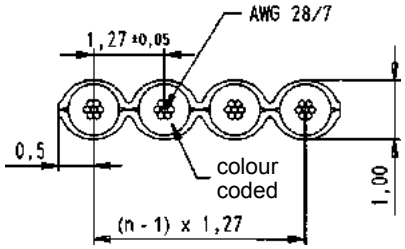	Colour code sequence (in 10 steps) brown, red, orange, yellow, green, blue, violet, grey, white, black
	9	09 18 009 7005		
	10	09 18 010 7005		
	14	09 18 014 7005		
	15	09 18 015 7005		
	16	09 18 016 7005		
	18	09 18 018 7005		
	20	09 18 020 7005		
	24	09 18 024 7005		
	25	09 18 025 7005		
	26	09 18 026 7005		
	28	09 18 028 7005		
	30	09 18 030 7005		
	34	09 18 034 7005		
	37	09 18 037 7005		
	40	09 18 040 7005		
	50	09 18 050 7005		
	60	09 18 060 7005		
	64	09 18 064 7005		

Conductor material: Copper tinned
Gauge: AWG 28/7 0.09 mm²
Voltage rating: 300 $V_{r.m.s.}$
Current rating at 25 °C: 2.1 A max.
Conductor resistance: 221 mΩ/m
Capacity unbalanced: 42.7 pF/m
Impedance unbalanced: 105 Ω
Inductance unbalanced: 0.68 µH/m
Signal delay: 4.9 ns/m
Insulation material: PVC
Temperature rating (operating): -20 °C … +105 °C
Temperature rating (static): -30 °C … +105 °C
Flammability rating: UL: VW 1
Insulation resistance: 100 MΩ/km

Identification	No. of contacts	Part number	Drawing	Dimensions in mm
Flat cable twisted pair Length per reel 30.48 m (100 feet) UL AWM-style 20130	10	09 18 010 7006	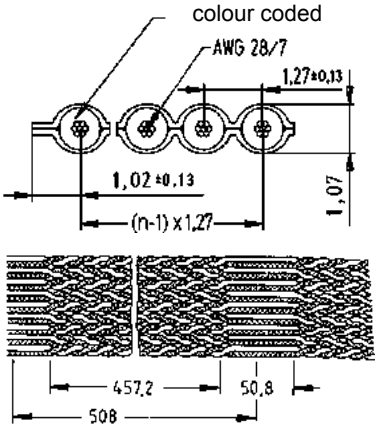	
	14	09 18 014 7006		
	16	09 18 016 7006		
	20	09 18 020 7006		
	26	09 18 026 7006		
	34	09 18 034 7006		
	40	09 18 040 7006		
	50	09 18 050 7006		
	60	09 18 060 7006		
	64	09 18 064 7006		

Conductor material: Copper tinned
Gauge: AWG 28/7 0.089 mm²
Voltage rating: 300 $V_{r.m.s.}$
Conductor resistance: 221 mΩ/m
Capacity unbalanced: 49 pF/m
Impedance unbalanced: 105 Ω
Signal delay: 5.2 ns/m
Insulation material: PVC
Temperature rating: -20 °C … +105 °C
Flammability rating: UL: VW 1
Insulation resistance: 10^4 MΩ/km

Important: always store reel vertically

Cables for insulation displacement termination

Identification	No. of contacts	Part number	Drawing ø max.
Round flat cable			
with screening (shielding)	9	09 18 009 70 ⌴	6.86
	10	09 18 010 70 ⌴	6.86
	14	09 18 014 70 ⌴	7.37
UL listed PLCC CL2	15	09 18 015 70 ⌴	7.62
CSA certified AWM FT-1	16	09 18 016 70 ⌴	7.87
	20	09 18 020 70 ⌴	8.38
	25	09 18 025 70 ⌴	9.14
	26	09 18 026 70 ⌴	9.14
	34	09 18 034 70 ⌴	10.16
	37	09 18 037 70 ⌴	10.41
	40	09 18 040 70 ⌴	10.92
Length per reel	50	09 18 050 70 ⌴	12.19
	60	09 18 060 70 ⌴ *	13.21
30.48 m (100 feet) 07	64	09 18 064 70 ⌴	13.46
100 m (328 feet) 10 [1]			
without screening (shielding)	9	09 18 009 7008	6.35
	10	09 18 010 7008	6.35
	14	09 18 014 7008	6.60
UL listed PLCC CL2	15	09 18 015 7008	6.86
CSA certified AWM FT-1	16	09 18 016 7008	7.11
	20	09 18 020 7008	7.62
Length per reel	25	09 18 025 7008	8.38
30.48 m (100 feet)	26	09 18 026 7008	8.38
	34	09 18 034 7008	9.40
	37	09 18 037 7008	9.65
	40	09 18 040 7008	10.16
	50	09 18 050 7008	11.43
	60	09 18 060 7008 *	12.45
	64	09 18 064 7008	12.70

Dimensions in mm

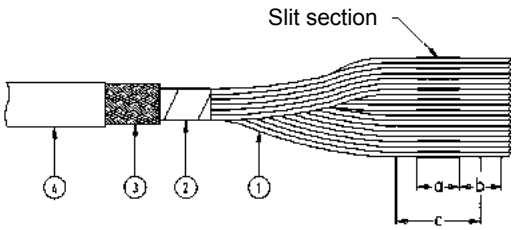

① Flat cable, AWG 28/7
② Aluminium / Polyester tape (spiral wrap)
③ 85 % minimum coverage tinned copper braid
④ Outer jacket: black PVC

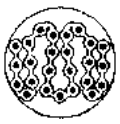

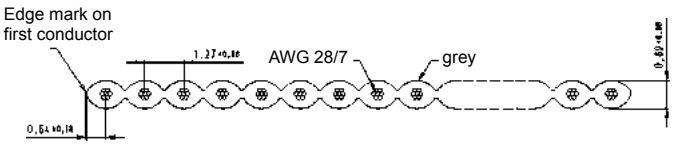

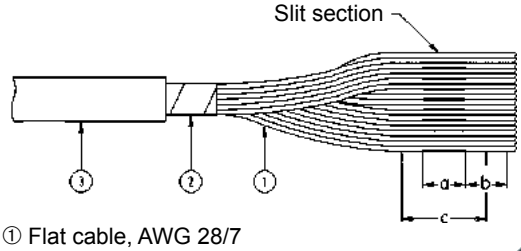

① Flat cable, AWG 28/7
② Clear polyester
③ Outer jacket: black PVC

No. of contacts	a	b	c
9 to 26	19.05	19.05	38.10
34 to 64	38.10	19.05	57.15

Conductor material	Copper tinned
Gauge	AWG 28/7 0.089 mm²
Voltage rating	300 $V_{r.m.s.}$
Conductor resistance	225 mΩ/m
Capacity unbalanced	78.7 pF/m
Impedance unbalanced	75 Ω
Signal delay	5.25 ns/m nom.
Insulation material	PVC
Temperature rating	-20 °C … +105 °C
Flammability rating	UL: VW 1
Insulation resistance	10^4 MΩ/km

* Not normally kept in stock
[1] Only available for 10, 14, 37, 40 and 64 contacts
Important: always store reals vertically

Notes

09. DIN 41 612 Connectors

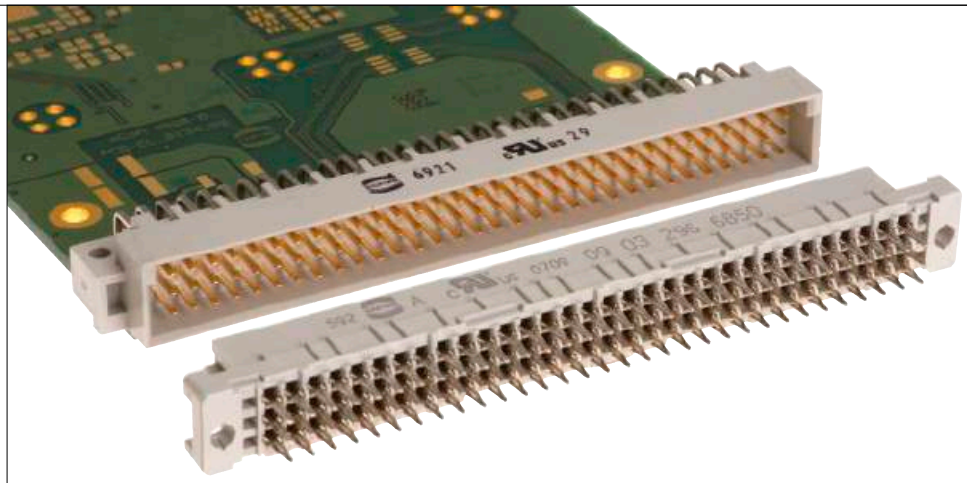

Connectors that comply with DIN 41 612 have been in use for years for both board-to-board applications and cable-to-board applications. Their robustness and universality are legendary. The classic signal connectors are supplemented by power solutions for allowing insertion of up to 40 A. Plastic, metallized and full metal housings, used in combination with shielded or unshielded cables with a high number of poles, are available for cable-to-board connectors. HARTING offers a wide range of DIN 41 612 connectors and accessories. The following catalogue pages contain an extract from the DIN 41 612 connector program. The complete DIN 41 612 connector program for data, signals and power can be found in the complete DIN 41 612 catalogue.

Application profile:

CONNECTION TYPE		ENVIRONMENT		APPLICATION						
Board to Board	Cable/ Wire to Board	IP20	IP65 / IP67	Data	Signal	Power	high performance			
							Data transfer rate	Shielding	Number of contacts, contact density	Voltage, working current
●	●	●		●	●	●	●	●	●	●

Cable termination

Han-Quick Lock®	*IDC*	*Crimp*
	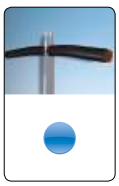	
	●	●

Screw	*Cage clamp*	*Axial screw*
	●	

PCB termination

THT	*SMC*	*SMT*
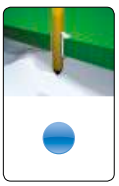	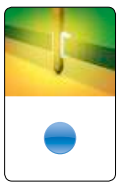	
●	●	

Press-in
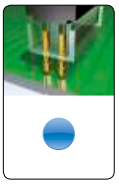
●

Application standard

VMEbus Technology

Housing integration

Separate housing	*Integrated housing*
●	

Contents

	Page
Overview DIN Signal	**09.04**
Overview *har-bus® 64*	**09.06**
Application examples	**09.07**
Overview DIN Power	**09.08**
Overview shell housings	**09.10**
Male and female connectors with pcb fixings	**09.11**

09. DIN 41 612 Connectors

In devices for industrial automation and measurement techniques, the DIN 41 612 connector is the standard for board-to-board and cable-to-board connections as both data and power connectors. HARTING offers a wide range of standard connectors complying with DIN 41 612 and IEC 60 603-2, as well as a great selection of complementary types and customer specific solutions. Depending on the application, the 3 to 160 way connectors are offered with various termination methods, each contact capable of carrying from 2 A to 40 A.

HARTING differentiates between DIN Signal and DIN Power connectors depending on the maximum allowed working current per contact: up to 2 A for DIN Signal and over 2 A for DIN Power connectors.

HARTING's range *har-bus® 64* features 160 contacts and is an extension of the 3 row 96 way DIN 41 612 C type range with 2 additional rows. The 5 row *har-bus® 64* connector is 100 % forwards and backwards compatible with the type C connectors according to DIN 41 612. The design of male and female connectors allows the mating of any combination of the 5 or the 3 row variants.

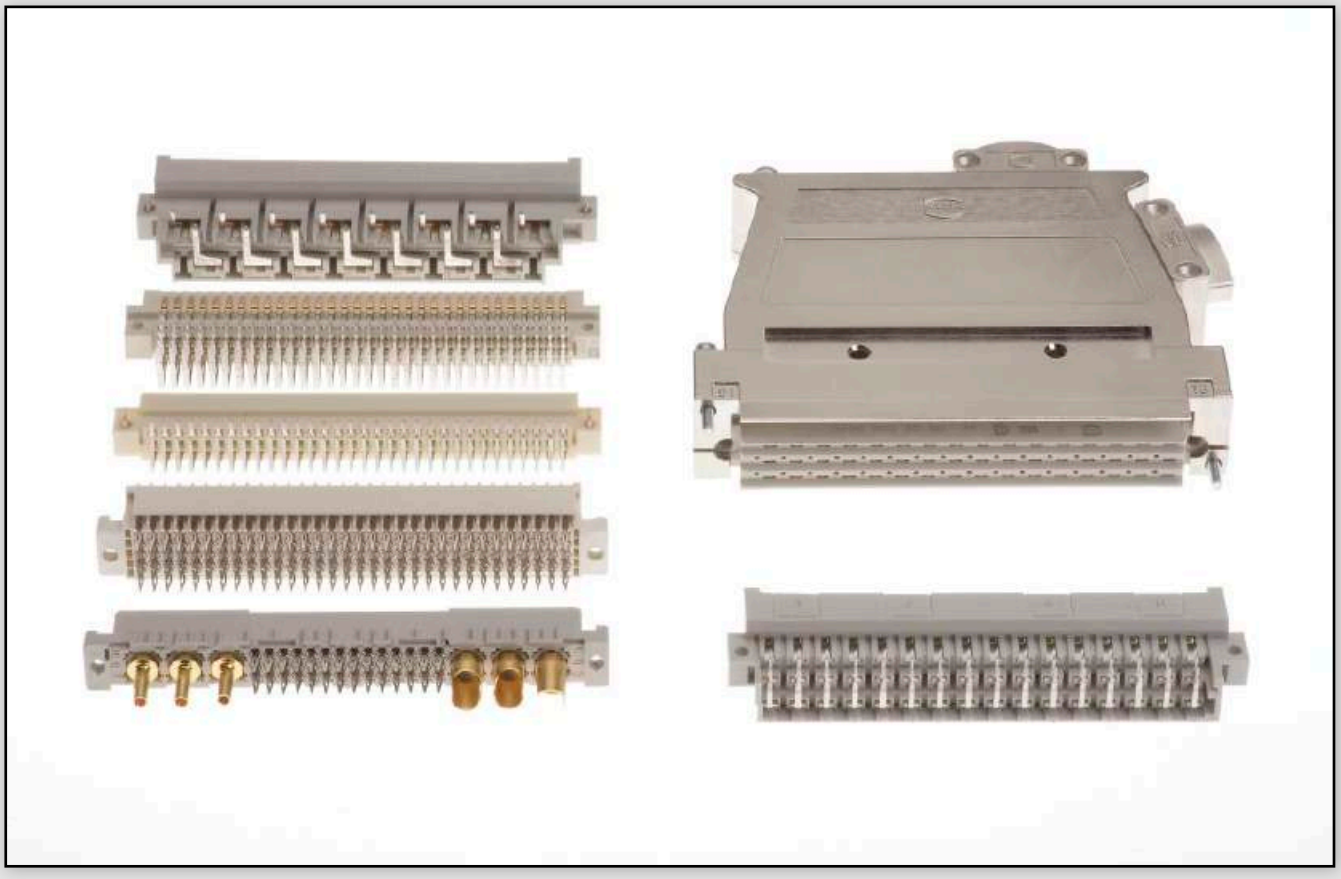

Specific features of the product range

The design of the *har-bus® 64* female allows mating of any combinations of the 5 or 3 row standard male connectors. It is also possible to mate 5 row male connectors with 3 row female connectors.
This kind of backwards compatibility allows the user the staged transition to a higher performance category and simultaneous use of daughter cards in the slots of the previous generation.
Therefore all existing bus systems, for which the 3 row C96 pin connectors are no longer sufficient, can be adapted to the latest requirements without a complete system redesign.

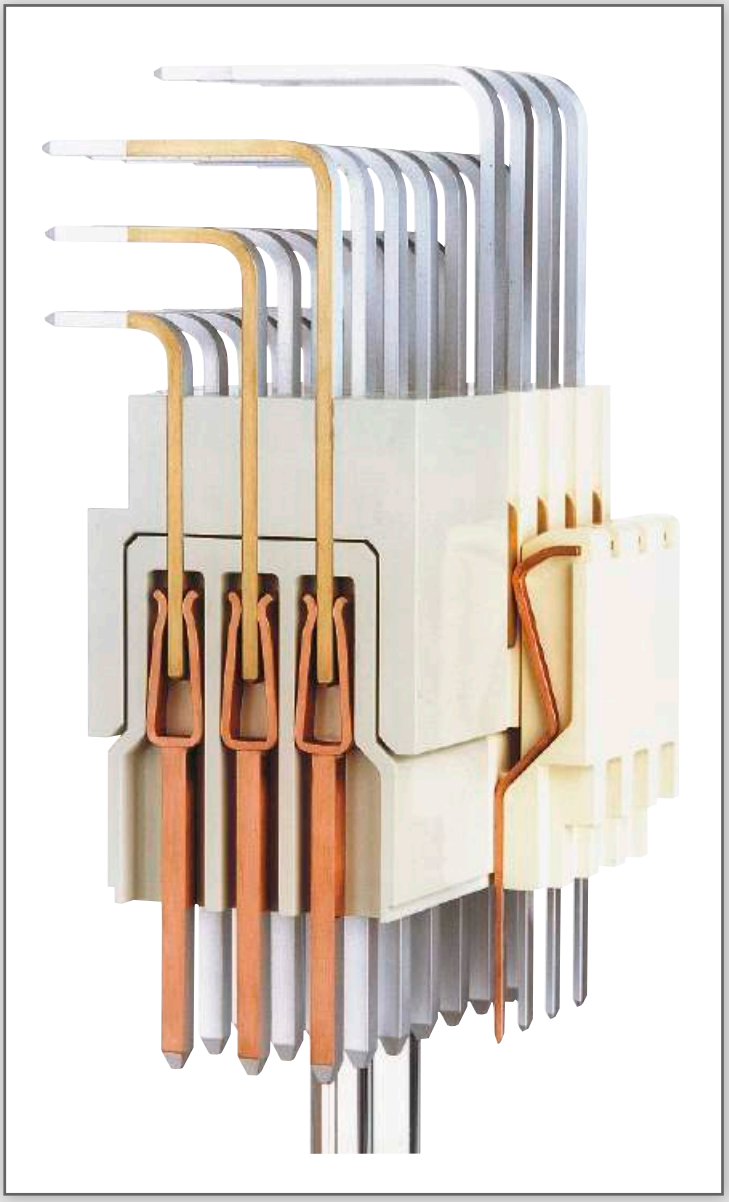

Variety of DIN 41 612 types
Due to the large variety of complementary types, accessories and different kinds of shell housings which are available in plastic, metallized plastic and full metal, DIN 41 612 connector range is considered to be ideal for your robust, reliable and cost-efficient connectivity solution.
The special requirements of industrial electronics can be satisfied with standard types.

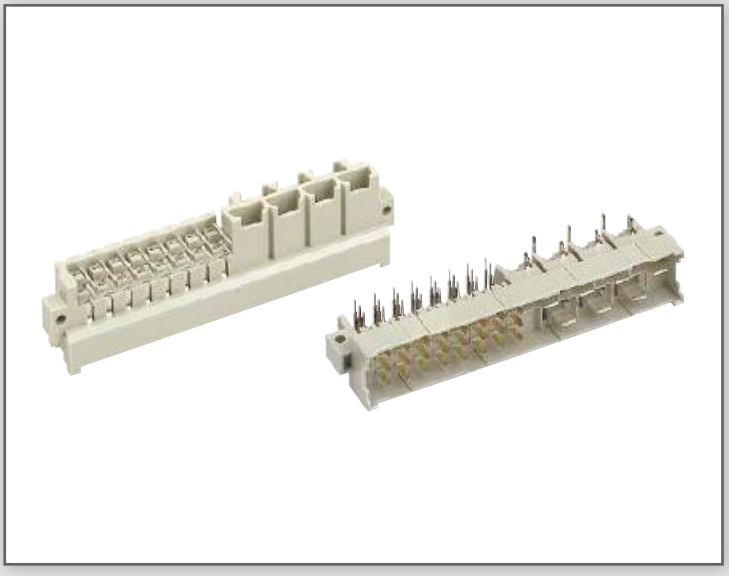

DIN Signal overview

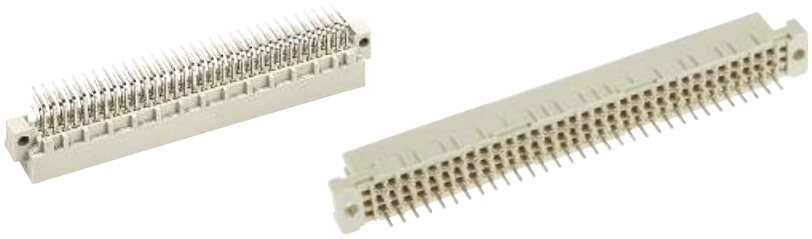

For detailed information see catalogue DIN 41612 or www.HARTING.com

Type	Maximum number of contacts			Termination						
				Solder	Reflow Soldering (SMC)	Solder lug	Press-in	Crimp	Wire wrap	IDC
B	64		male	3.0 mm	3.0 mm					
			female	2.9 mm 4.5 mm 13.0 mm	2.9 mm 4.5 mm	X	4.5 mm 13.2 mm	X	13.0 mm	X
2 B	32		male	3.0 mm	3.0 mm					
			female	2.9 mm 4.5 mm	2.9 mm 4.5 mm		4.5 mm		13.0 mm	
3 B*	20		male	3.0 mm	3.0 mm					
			female	2.9 mm 4.5 mm	2.9 mm		4.5 mm			
C	96		male	3.0 mm	3.0 mm					
			female	2.9 mm 4.5 mm 13.0 mm	2.9 mm 4.5 mm	X	4.5 mm 13.2 mm 17.0 mm	X	13.0 mm	X
2 C	48		male	3.0 mm	3.0 mm					
			female	2.9 mm 4.5 mm 13.0 mm	2.9 mm 4.5 mm	X	3.7 mm 4.5 mm	X	13.0 mm	
3 C*	30		male	3.0 mm	3.0 mm					
			female	2.9 mm 4.5 mm	2.9 mm		4.5 mm	X		
M	78 + 2 60 + 4 42 + 6 24 + 8		male	3.0 mm						
			female	2.9 mm 4.5 mm			4.5 mm			

* Available with and without flange

DIN Signal overview

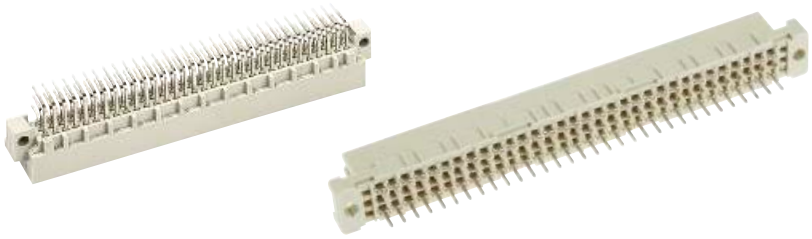

For detailed information see catalogue DIN 41612 or www.HARTING.com

				Termination						
Type	Maximum number of contacts			Solder	Reflow Soldering (SMC)	Solder lug	Press-in	Crimp	Wire wrap	IDC
M flat	78 + 2 60 + 4 42 + 6 24 + 8		female	2.9 mm 4.5 mm			4.5 mm			
M inverse	78 + 2 60 + 4 42 + 6 24 + 8 6 + 10		male	2.5 mm 4.0 mm			5.5 mm 13.0 mm		13.0 mm	
			female	3.0 mm						
Q	64		male	2.5 mm 4.0 mm 13.0 mm			5.0 mm 13.0 mm		13.0 mm 17.0 mm	
			female	3.0 mm						
2 Q	32		male	2.5 mm 4.0 mm 13.0 mm			5.0 mm		13.0 mm	
			female	3.0 mm						
3 Q*	20		male	2.5 mm 4.0 mm 13.0 mm	2.5 mm 4.0 mm 13.0 mm		5.0 mm 13.0 mm		13.0 mm	
R	96		male	2.5 mm 4.0 mm 13.0 mm	2.5 mm 4.0 mm 13.0 mm		5.0 mm 13.0 mm		13.0 mm	
			female	2.8 mm	2.8 mm					
R (HE 11)	96		male	2.5 mm 4.0 mm					13.0 mm	
			female	2.9 mm						
RM	96		male				5.0 mm 13.0 mm			
2 R	48		male	2.5 mm 4.0 mm 13.0 mm	2.5 mm 4.0 mm 13.0 mm		5.0 mm 13.0 mm		13.0 mm	
			female	3.0 mm						
3 R*	30		male	2.5 mm 4.0 mm 13.0 mm	2.5 mm 4.0 mm 13.0 mm		5.0 mm 13.0 mm		13.0 mm	

* Available with and without flange

har-bus® 64 overview

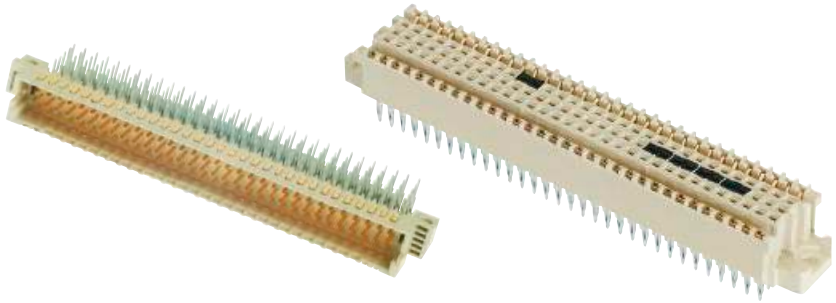

For detailed information see catalogue DIN 41612 or www.HARTING.com

Type	Maximum number of contacts			Termination						
				Solder	Reflow Soldering (SMC)	Solder lug	Press-in	Crimp	Wire wrap	IDC
har-bus® 64	160		male	3.0 mm	3.0 mm					
			female	2.9 mm			3.7 mm 5.0 mm 17.0 mm	X		
			female with switches				4.5 / 5.0 mm			

har-bus® 64 system description

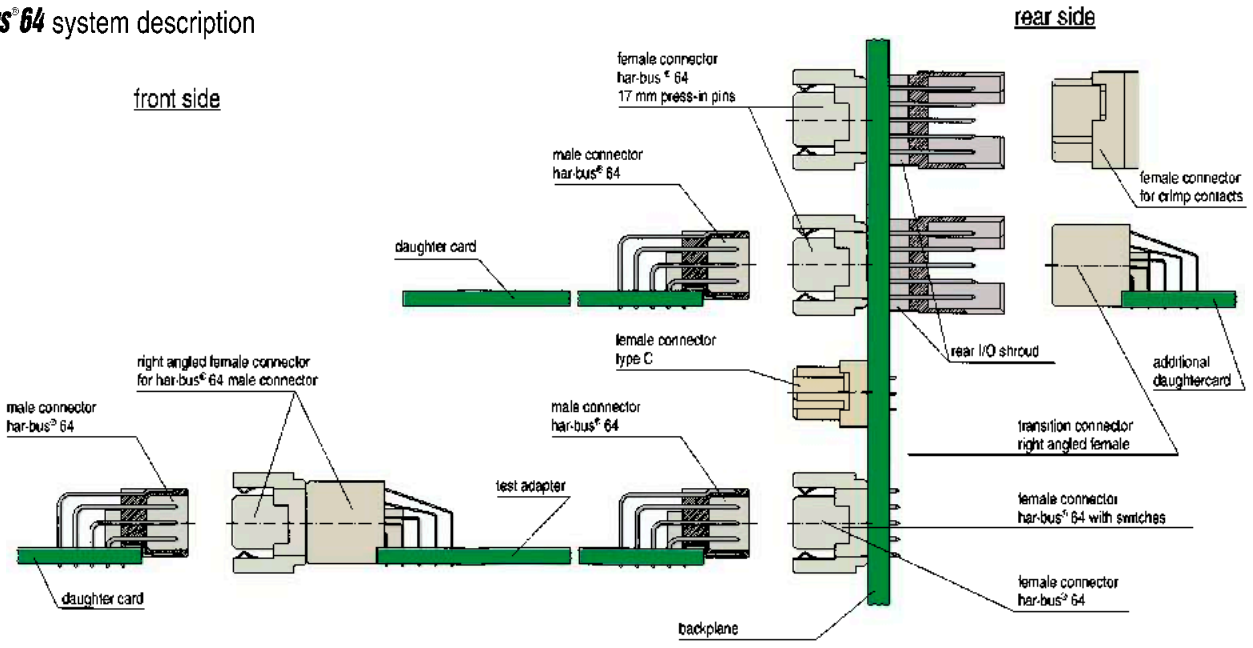

DIN 41612

Technical characteristics DIN Signal / har-bus® 64

Number of contacts	16 – 160
Contact spacing	2.54
Working current (all contacts are loaded)	2 A 1 A for har-bus® 64 at 70 °C 1 A with insulation displacement 40 A max. type M
Test voltage $U_{r.m.s}$	1 KV
Contact resistance	≤ 15 mΩ for solder and wire wrap connection ≤ 20 mΩ for crimp connection ≤ 20 mΩ har-bus® 64 rows a,b,c ≤ 30 mΩ har-bus® 64 rows z,d
Insulation resistance	≥ 10^{10} Ω har-bus® 64 ≥ 10^{12} Ω DIN Signal
Temperature range	-40 °C ... +105 °C for press-in connectors -55 °C ... +125 °C max. + 240 °C for 15 s during reflow soldering (only SMC)

Insertion and withdrawal force	16-pol. ≤ 15 N 30-pol. ≤ 30 N 32-pol. ≤ 30 N 48-pol. ≤ 45 N 64-pol. ≤ 60 N 96-pol. ≤ 90 N 160-pol. ≤ 160 N
Materials	
Mouldings	thermoplastic resin, glass-fibre filled, UL 94-V0 Liquid Cristal Polymer (LCP), UL 94-V0 Poly Cyclohexylene Terephthalate (PCT), UL 94-V0 NFF classification up to F1/I2
Contacts	copper alloy
Contact surface	
Contact zone	selectively plated according to performance level

Application examples

Application 1

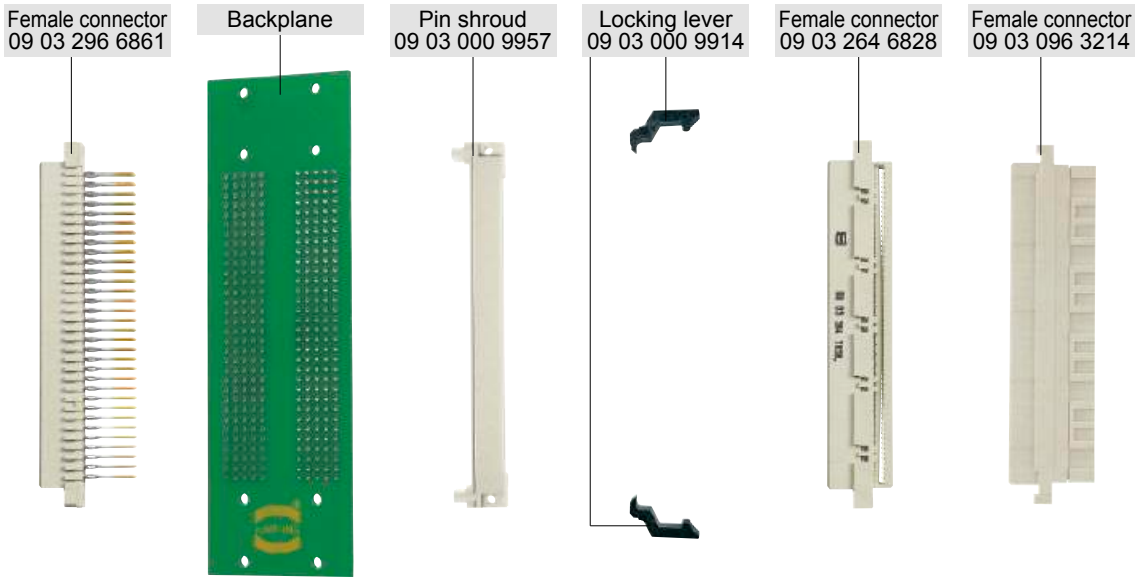

Application 2

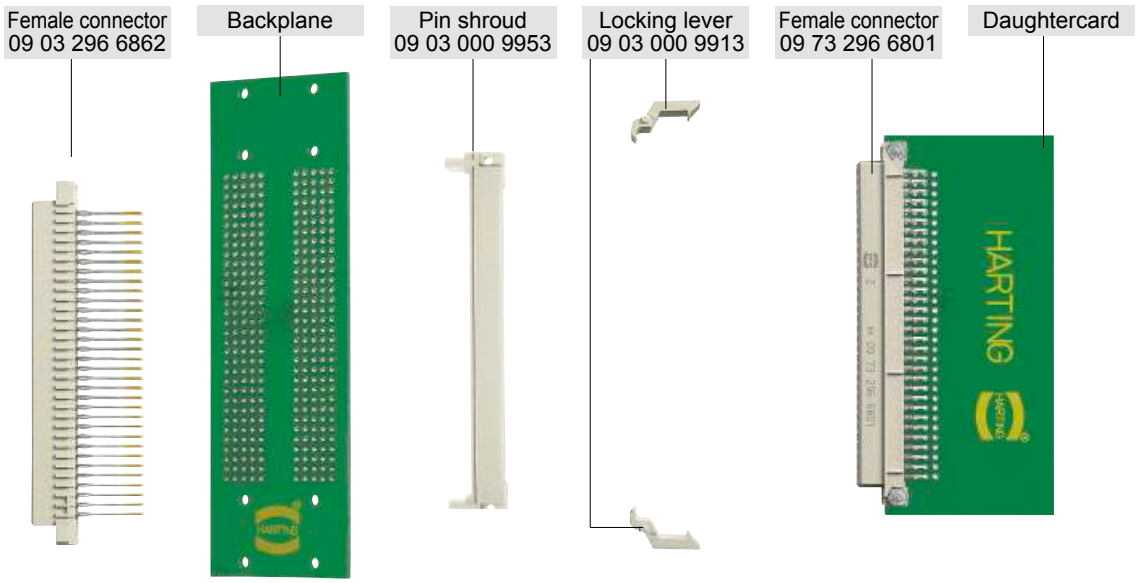

Application 3

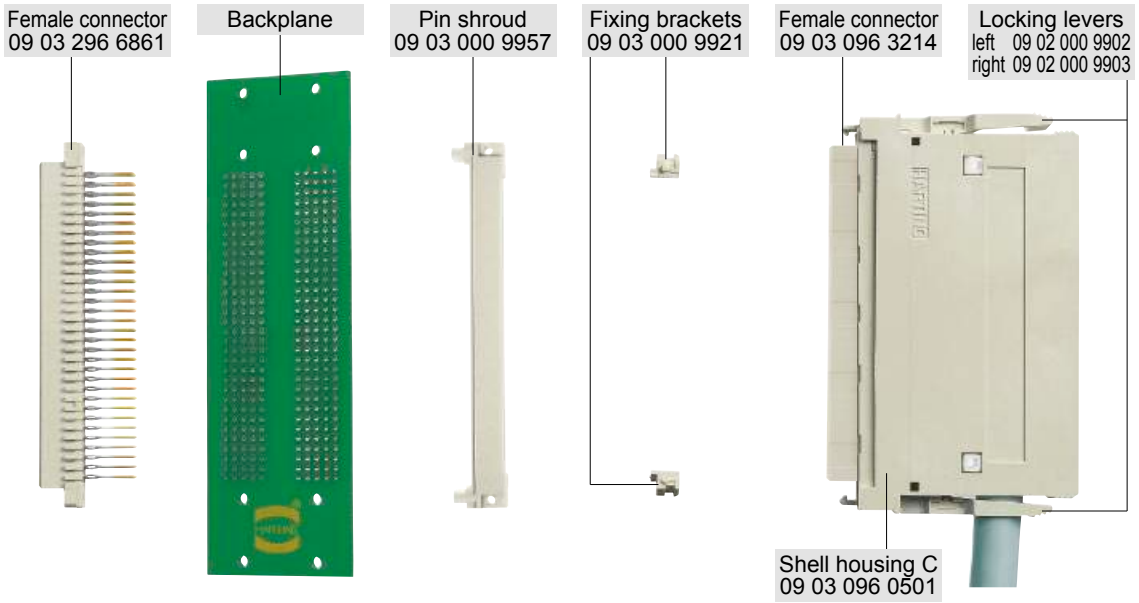

DIN 41612

DIN Power overview

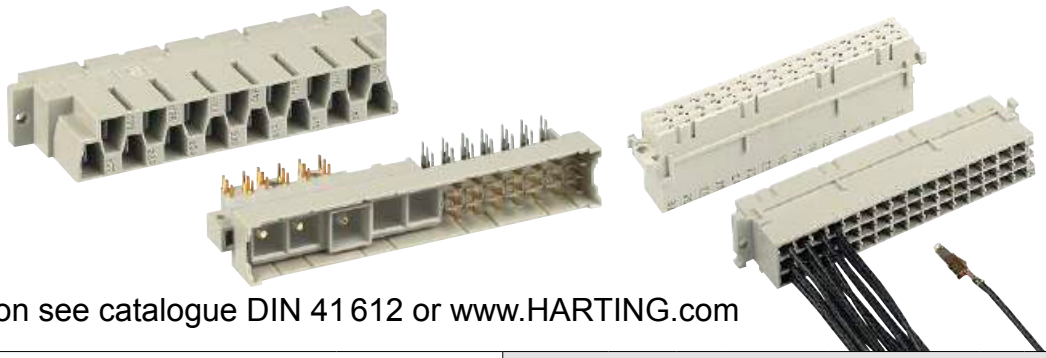

For detailed information see catalogue DIN 41612 or www.HARTING.com

Type	Maximum number of contacts			Termination							
				Solder	Reflow Soldering (SMC)	Solder lug	Press-in	Crimp	Wire wrap	Faston	Cage clamp
D	32		male	3.0 mm	X						
			female	2.9 mm 4.5 mm		X		X	20.0 mm		
E	48	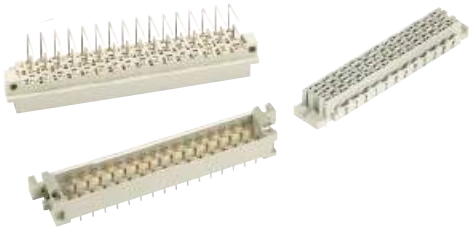	male	3.0 mm	X						
			female	2.9 mm 4.5 mm		X	4.5 mm 11.5 mm	X	20.0 mm		
			Interface connector I	4.0 mm							
F	48		male	3.0 mm	X						
			female	3.7 mm 4.5 mm		X		X	22.0 mm		
F Low profile	48	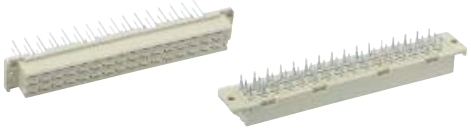	female	3.7 mm 4.5 mm			4.5 mm 13.0 mm				
			Interface connector I	3.5 mm				X	22.0 mm		
F 9	9		male					X			
			female					X			
FM	45	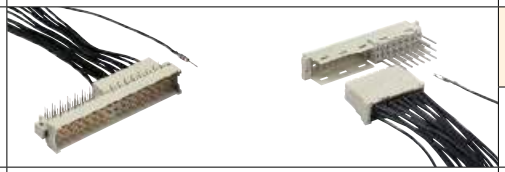	male	3.0 mm				X			
			female	4.5 mm				X	22.0 mm		
2 F	24		female					X			
			Interface connector I					X			

DIN Power overview

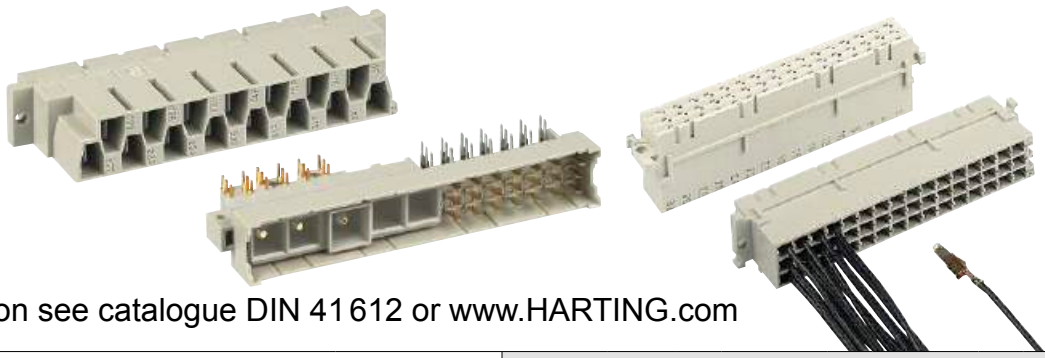

For detailed information see catalogue DIN 41612 or www.HARTING.com

Type	Maximum number of contacts			Termination							
				Solder	Reflow Soldering (SMC)	Solder lug	Press-in	Crimp	Wire wrap	Faston	Cage clamp
H	15		male	3.0 mm						X	
			female	2.7 mm 4.0 mm 5.5 mm 7.0 mm 10.0 mm			3.6 mm			X	X
H	16		male	3,0 mm							
			female							X	
H 3	3		male	3.0 mm							
			female	4.0 mm							
MH	24 + 7		male	3.0 mm						X	
			female	4.5 mm				X	22.0 mm		
MH	21 + 5	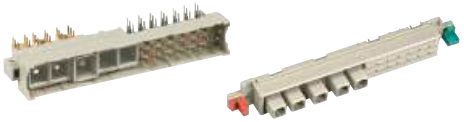	male	3.1 mm							
			female	3.2 mm							

DIN 41612

Technical characteristics DIN Power

Number of contacts	3 – 48
Contact spacing	5.08 mm; 2.54 mm
Working current (all contacts are loaded)	
Type D, E, F, F9, FM, 2F	6 A max.
Type H, H 3	15 A max.
Test voltage $U_{r.m.s}$	
Type D, E, F, F9, FM, 2F	≥ 1.55 KV
Type H	≥ 3.1 KV
Type H 3	≥ 2.5 KV
Contact resistance	≤ 15 mΩ Solder and Wire wrap connection ≤ 20 mΩ Crimp connection
Insulation resistance	≥ 10^{12} Ω
Temperature range	-40 °C ... +105 °C Press-in connector -55 °C ... +125 °C max. + 240 °C for 15 s during reflow soldering (only SMC)

Insertion and withdrawal force	
Type D, E	32-pol. ≤ 40 N 48-pol. ≤ 75 N
Type F, F9, FM, 2F	24-pol. ≤ 37 N 32-pol. ≤ 50 N 45-pol. ≤ 70 N 48-pol. ≤ 75 N
Type H	≤ 90 N
Type H 3	≤ 20 N
Materials	
Mouldings	thermoplastic resin, glass-fibre filled, UL 94-V0 Poly Cyclohexylene Terephthalate (PCT), UL 94-V0 NFF classification up to F1/I2
Contacts	copper alloy
Contact surface	
Contact zone	selectively plated according to performance level hard silver plated or gold plated

Shell housing overview

For detailed information
see catalogue DIN 41612 or www.HARTING.com

DIN 41612

		Shell housings										Open hood		Junction element O	Locking lever O
		A	B	C	2C	3C	D15	D20	D20 metallized	D20 metal	A for 2F	2F	G		
Number of cable entries		2	4	4	3	3	2	4	4	4	1	2	4	2	2
for screw fixing		X	X	X	X	X	X	X	X	X	X	X	X	X	
for fixing with locking lever		X	X	X	X	X	X								X
for straight pcb connector				X	X	X									
for front side of the rack		X	X	X	X	X	X	X	X	X	X	X	X	X	X
for pin shrouds				X	X										
for Interface connector I or U		X	X	X			X				X	X	X	X	
EMC									X	X					
IP20		X	X	X	X	X	X	X	X	X	X	X	X	X	X
Coding included in shell housing								X	X	X					
for types	B / Q			X											
	2C / 2R				X										
	3C / 3R					X									
	C / R			X											
	harbus 64			X											
	D			X											
	E			X									X		
	F	X	X				X	X	X	X			X	X	X
	2F										X	X			
	H		X				X	X	X	X			X		X
	MH		X				X	X	X	X			X		X

Pin shrouds	for types						
	C	2C	R	2R	harbus 64	E	F
screw fixing	X	X	X	X			X
press-in fixing	X	X	X	X	X	X	X

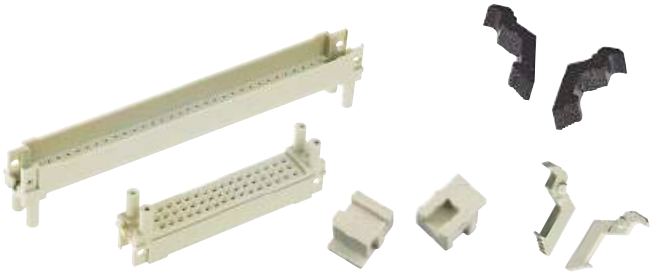

Snap-in clips

In the soldering process, all component terminations including the snap-in clips are soldered and therefore mechanically secured. This provides mechanical protection for the soldered contacts during mating and unmating of the connector.

Mouldings with snap-in clips offer the following advantages:

- Cost reduction when compared with the screw or rivet assembly methods due to the soldering of the clip along with other components in one process.
- The orientation of the clip after soldering in the plated through hole provides mechanical protection against the tensile forces arising from the mating and unmating of the connector.

It is possible to supply the majority of male and female connectors with solder termination with snap-in clips.

For pcb thickness
1.6 ± 0.2 mm
Ø = 2.8 $^{+0.1}$ mm

Mounting force
40 - 60 N

For pcb thickness
1.6 - 4.0 mm
Ø = 2.8 $^{+0.1}$ mm

Snap-in clip

DIN 41612

Kinked pins

Before and during soldering, the connectors are fixed onto the pcb with four kinked contacts located in the rows a and c, e.g. the positions a1, c1, a32 and c32 for a fully loaded connector.

Connectors with kinked pins are a reliable alternative for female connectors with straight terminations because no additional elements like screws, rivets or clips are necessary.

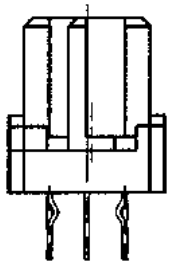

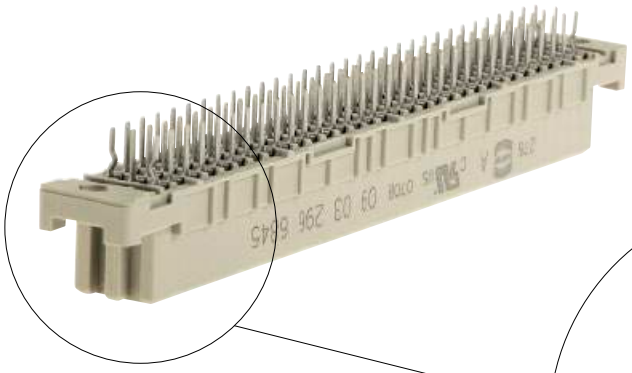

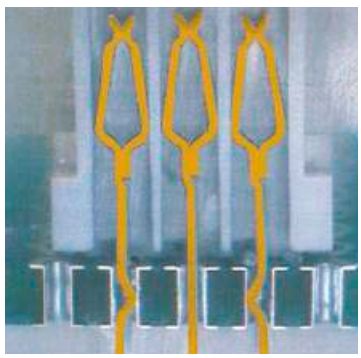

Cross section of a connector with kinked contacts assembled to a pcb

10. Mini Coax Connectors

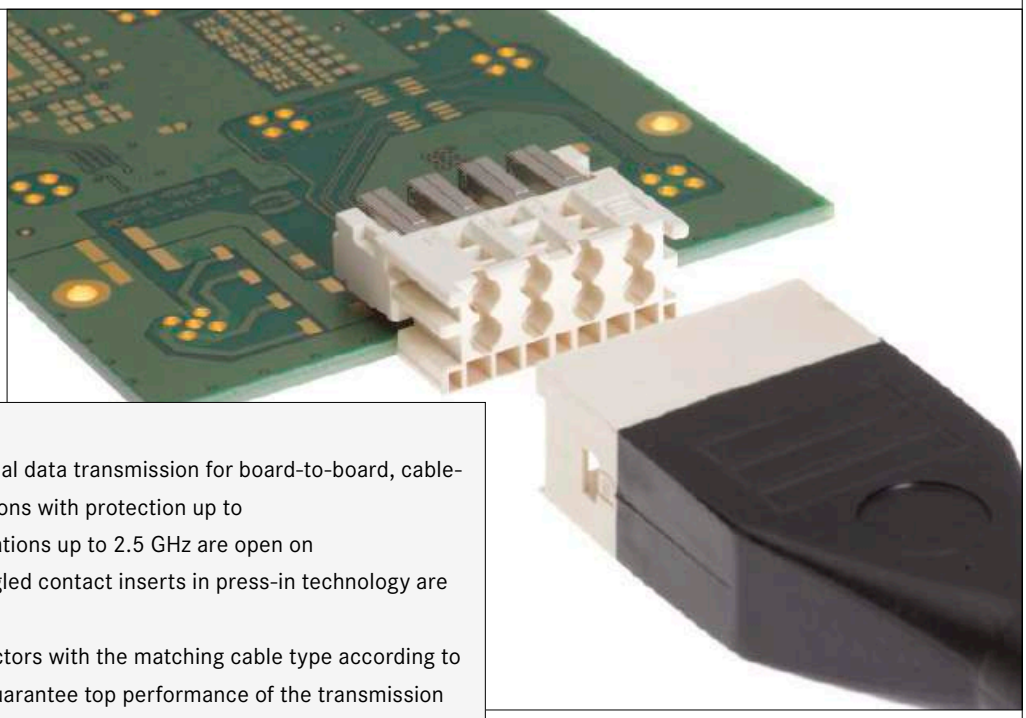

The Mini Coax allows multi-pole coaxial data transmission for board-to-board, cable-to-board and cable-to-cable applications with protection up to IP65 / IP67. At the same time, applications up to 2.5 GHz are open on the basis of 50 Ohm. Straight and angled contact inserts in press-in technology are available for device integration.

HARTING assembles Mini Coax connectors with the matching cable type according to customer specifications in order to guarantee top performance of the transmission lines. A special feature is the connector overmolding, which guarantees a top quality and robust connection between the cable and connector.

Application profile:

CONNECTION TYPE		ENVIRONMENT		APPLICATION						
Board to Board	Cable/ Wire to Board	IP20	IP65 / IP67	Data	Signal	Power	high performance			
							Data transfer rate	Shielding	Number of contacts, contact density	Voltage, working current
●	●	●			●		●	●		

Cable termination

Han-Quick Lock®	*IDC*	*Crimp*
		●

Screw	*Cage clamp*	*Axial screw*

PCB termination

THT	*SMC*	*SMT*

Press-in
●

Application standard

Housing integration

Separate housing	*Integrated housing*
●	

Contents

	Page
Mini Coax connector system – introduction	**10.02**
Mini Coax connector system – general information	**10.04**
Technical characteristics	**10.06**
Straight Mini Coax Standard modules for backplane assembly	**10.08**
Angled Mini Coax Standard modules for daughtercard assembly	**10.09**
Angled Mini Coax single-row modules for daughtercard assembly	**10.10**
Mini Coax cable assemblies – general information	**10.11**
Assemblies with standard modules	**10.12**
Assemblies with single-row modules and with heavy duty hoods/housings	**10.14**
Accessories	**10.15**

Mini Coax tooling see chapter 20

MULTI-COAXIAL CONNECTOR SYSTEM MINI COAX

The HARTING multi line Mini Coax connector system for board-to-backplane RF interconnection includes connectors for press-in technology with 1 to 10 coaxial lines.
The Mini Coax connector range allows transmission of analogue signals in various applications like cellular base transceiver stations (BTS), repeaters and passenger entertainment systems at radio frequencies up to 2.5 GHz per line at 50 Ohm.
Moreover, these compact and rugged connectors provide a 6 Sigma mating reliability thanks to the closed-entry contact design. The compact size of Mini Coax modules (minimum pitch of RF lines is 4.4 mm), combined with excellent RF-performance, makes this connector system especially suitable for high-end equipment.
The twin modules are available in metric sizes of 1.00, 1.25 and 1.50 SU (SU = System Unit = 25 mm) for both cable assemblies and PCBs with 2 to 10 coaxial lines, as well as a single row version with 1 to 3 coaxial lines.
HARTING offers customised cable assemblies including adaptor cables to the most popular discrete coaxial contacts such as SMA, SMB, BNC, N-Type, etc. A complete range of accessories and tools supports the wide product range.

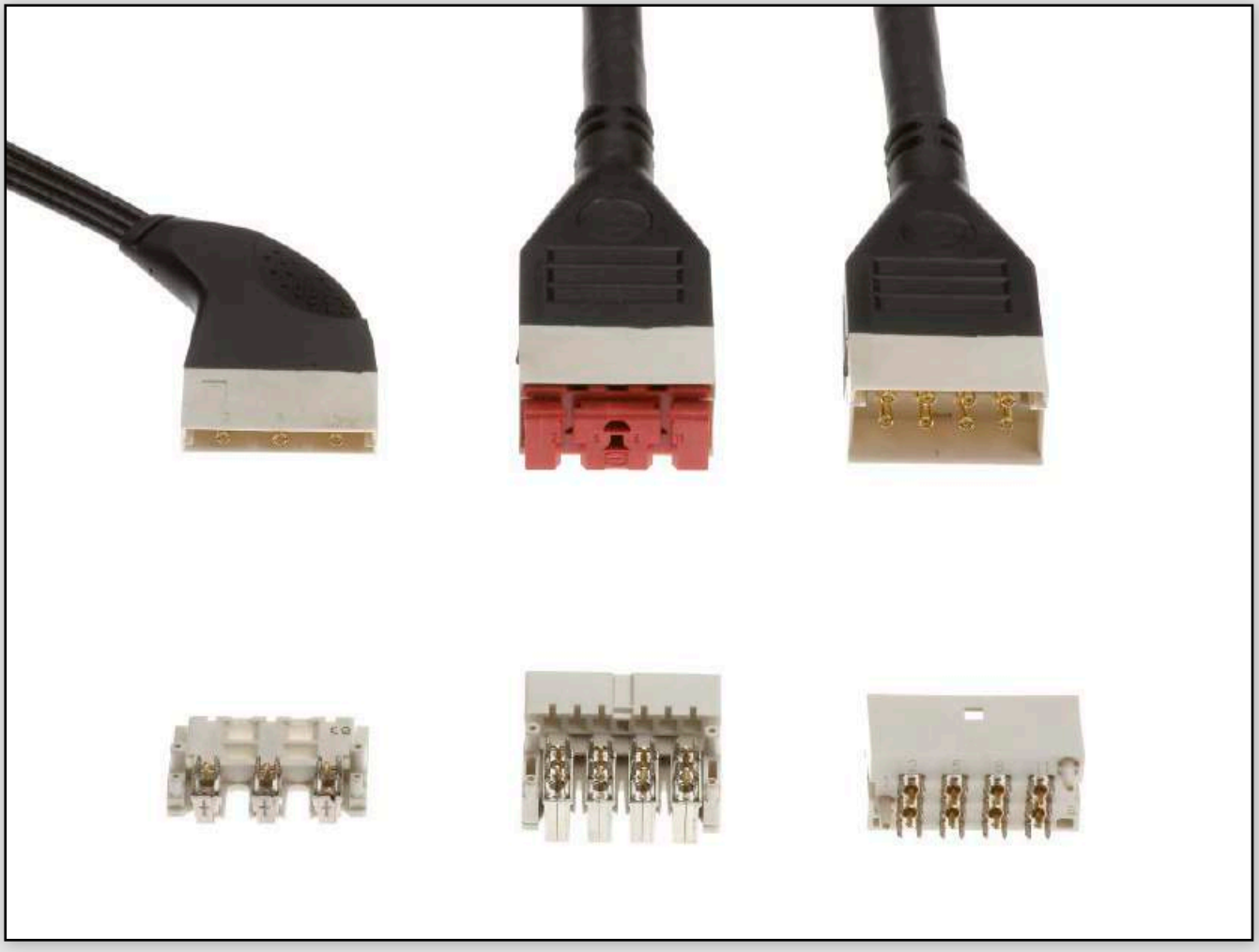

Specific features of the product range

CAN BE USED IN MIXED CONFIGURATION

As board-to-board connectors Mini Coax and *har-bus® HM* connectors can be used on board in any mixed configuration.

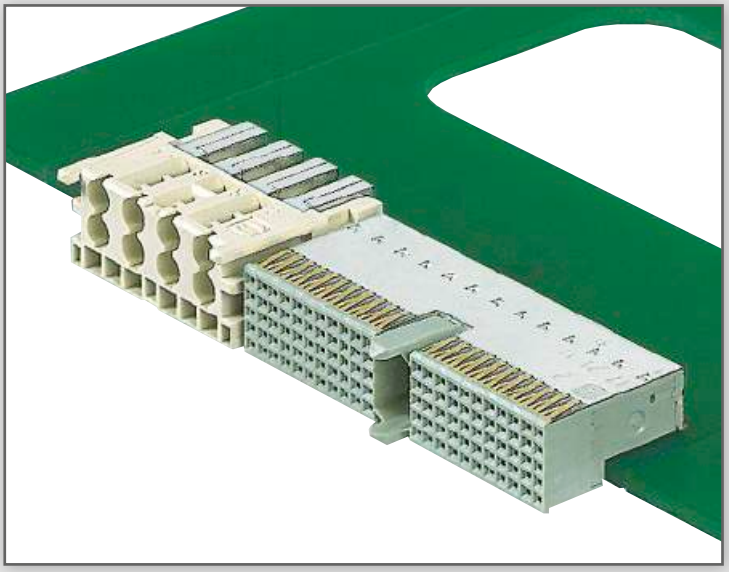

HIGH DATA TRANSMISSION RATE

The press-in termination offers an easy processing with very high frequency rates up to 2.5 GHz (even 4.5 GHz with the single row connector).

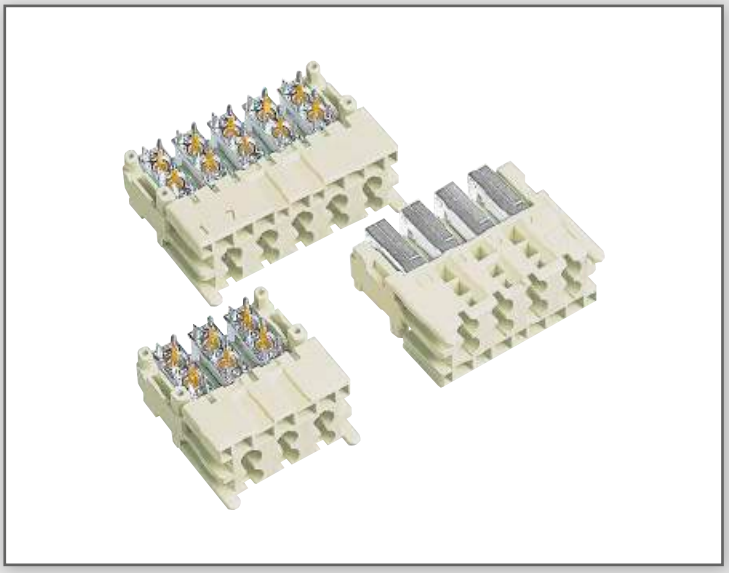

IP65 ENVIRONMENT

The combination of a Mini Coax connector with a Han® housing results in a proper IP65 Industrial Mini Coax connector.

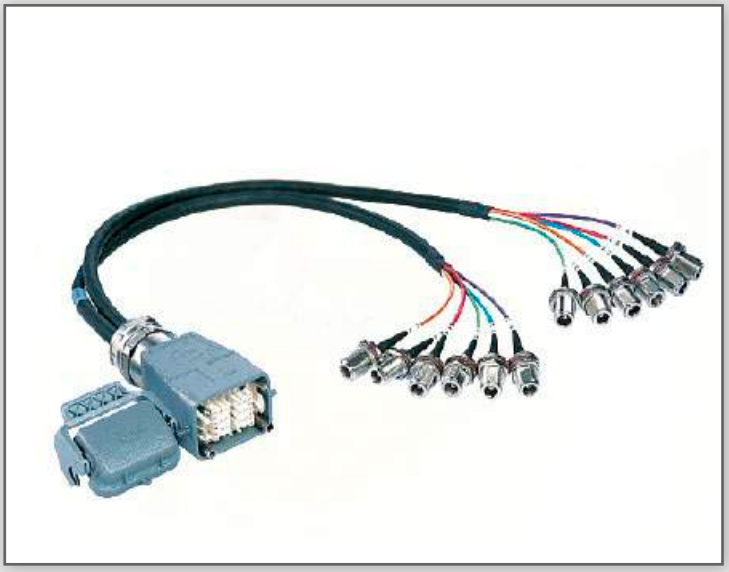

The Mini Coax connector is a multi line RF connector for blind mating of board-to-board, board-to-cable or cable-to-cable applications. The Mini Coax connector is mainly used in both RF (Radio Frequency) and IF (Intermediate Frequency) signal transmission and is specified for a frequency range from DC to 2.5 GHz and beyond. Thanks to its compact size (a 10 coaxial contacts' connector is as small as a PC's enter key) and excellent crosstalk features, this connector system is ideal for high end equipment within cellular telecom infrastructure.

The isolated coaxial lines are implemented in a plastic housing that defines the module size in a metric scale from 1.00, 1.25 and 1.50 SU (SU = System Unit = 25 mm). The Mini Coax connectors are available as straight sockets and right angled plugs. Both types are executed in press-in technology for the PCB (Printed Circuit Board) termination. The straight modules are delivered with an inserted plastic cap that protects the coaxial contacts against dust and dirt, as well as being used as an upper press-in tool. In this way, an easy and safe flat rock process is guaranteed.

The contacts of the Mini Coax single-row connector are single line, as opposed to the standard connector. This delivers enhanced performance, especially in terms of isolation, and is also suitable for slim cabinet applications.

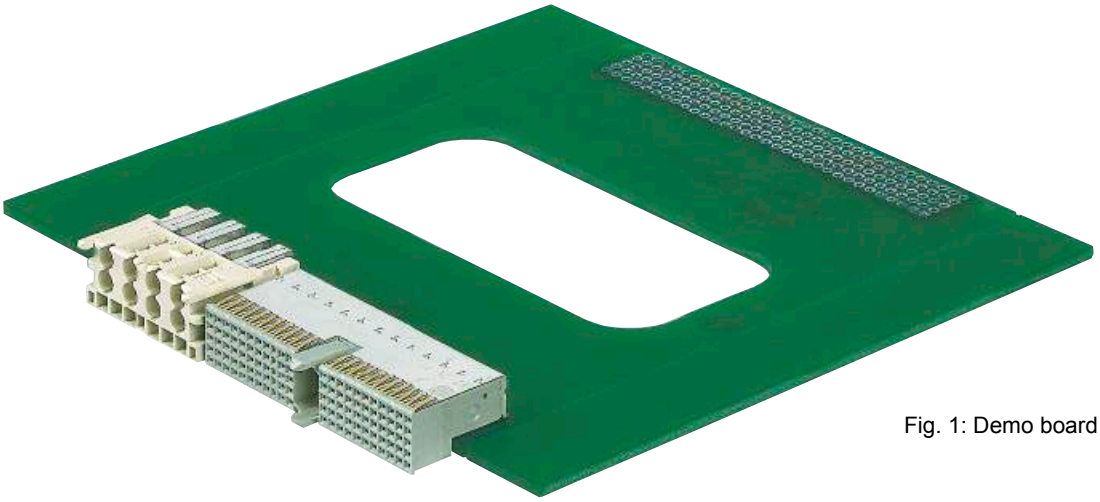

Fig. 1: Demo board

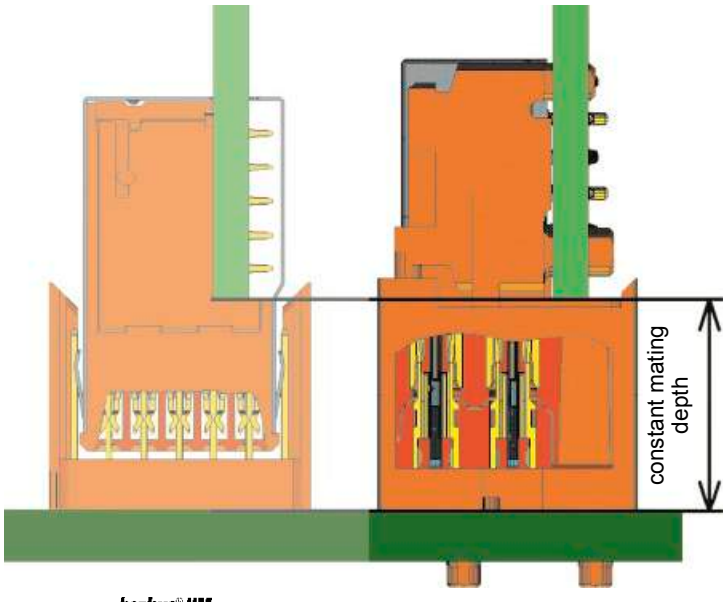

Fig. 2: Cross section of both connector types

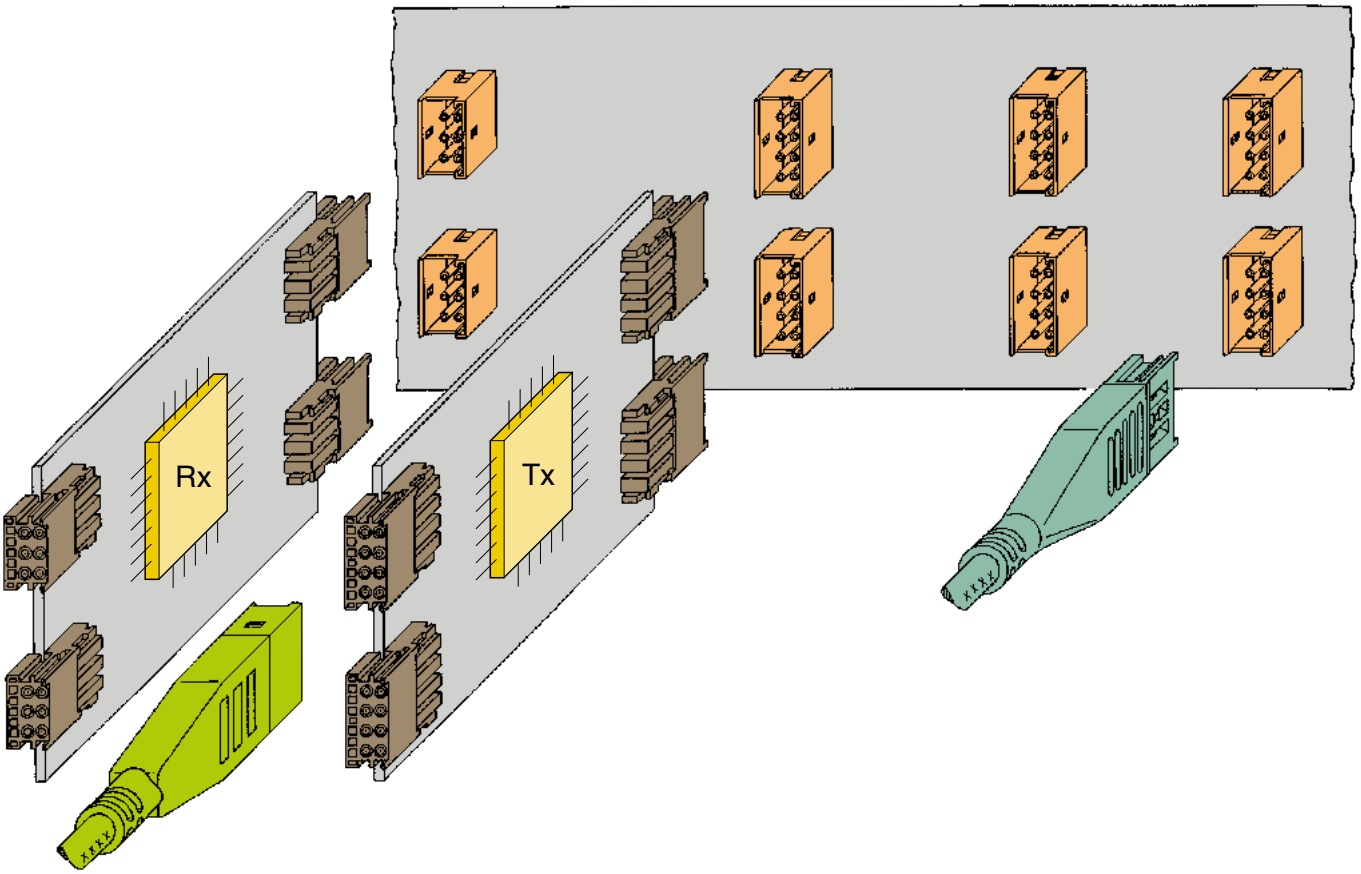

Fig. 3: Typical pcb configurations

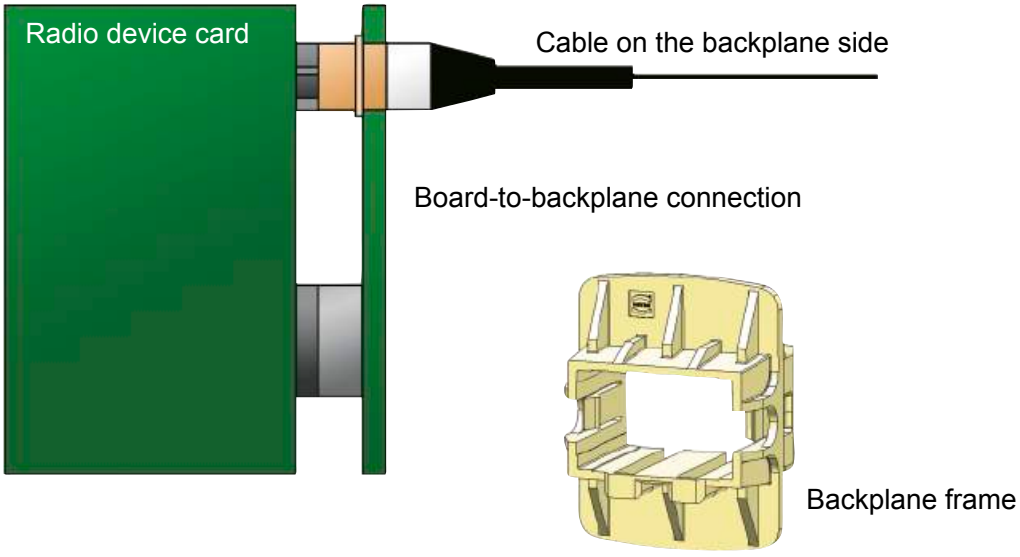

Fig. 4: Mini Coax backplane feed through

Number of contacts	:	1, 2, 4, 6, 8 or 10 coaxial contacts
Grid pattern	:	4.40 x 6.25 mm (within a twin x between twins); 8.80 mm for Mini Coax single-row connectors
Dielectric withstanding Voltage $U_{r.m.s.}$	:	≤ 1000 V (for 60 s)
DC-contact resistance		
Centre contact	:	≤ 12 mΩ
Ground contact	:	≤ 6 mΩ
Insulation resistance	:	≥ 5000 MΩ
Power	:	≤ 40 W (at 2.5 GHz)
Frequency range	:	DC … 2.5 GHz
Nominal impedance	:	50 Ω
Return loss	:	< - 20 dB
VSWR	:	< 1.22
Insertion loss	:	< 0.25 dB
Near end crosstalk (NEXT)	:	

Pin distance	Board-to-Board	Board-to-Cable	Cable-to-Cable
∆x = 4.40 mm	50 dB	60 dB	90 dB
∆x = 6.25 mm	60 dB	70 dB	90 dB
∆x = 7.64 mm	75 dB	80 dB	90 dB
∆x = 8.80 mm	–	75 dB	–
∆x = 12.50 mm	90 dB	90 dB	90 dB

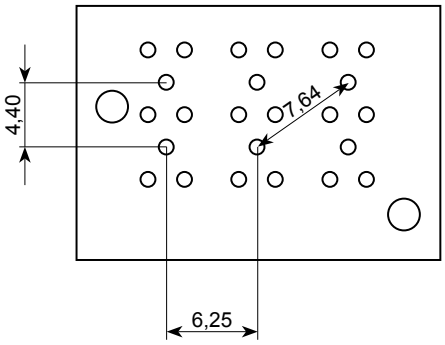

Fig. 5: Grid pattern
Mini Coax Standard

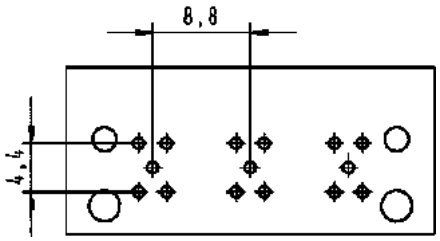

Fig. 6: Grid pattern
Mini Coax single-row

Temperature range	:	-55 °C ... +125 °C
Moulding material	:	Liquid Cristal Polymer (LCP), UL 94-V0
Contact surface		
Contact zone	:	Au
Termination area		
Centre pin	:	Au
Ground pin	:	Ni

Mating cycles : max. 500

Recommended configuration of plated through holes :

Tin plated PCB (HAL) acc. EN 60352-5	Hole-Ø	$1.15^{\pm 0.025}$ mm
	Cu	min. 25 µm
	Sn	max. 15 µm
	Plated hole-Ø	0.94-1.09 mm
Chemical tin plated PCB	Hole-Ø	$1.15^{\pm 0.025}$ mm
	Cu	min. 25 µm
	Sn	min. 0.8 µm
	Plated hole-Ø	1.00-1.10 mm
Au / Ni plated PCB	Hole-Ø	$1.15^{\pm 0.025}$ mm
	Cu	min. 25 µm
	Ni	3-7 µm
	Au	0.05-0.12 µm
	Plated hole-Ø	1.00-1.10 mm
Silver plated PCB	Hole-Ø	$1.15^{\pm 0.025}$ mm
	Cu	min. 25 µm
	Ag	0.1-0.3 µm
	Plated hole-Ø	1.00-1.10 mm
OSP copper plated PCB	Hole-Ø	$1.15^{\pm 0.025}$ mm
	Cu	min. 25 µm
	Plated hole-Ø	1.00-1.10 mm

PCB board thickness: ≥ 1.6 mm

Mating force : ≤ 10 N/contact

Withdrawal force : > 1 N/contact

Mating distance : 12.5 … 15 mm

Wiping length : 2.5 mm

Acceptable radial mating offset : max. ± 1.5 mm

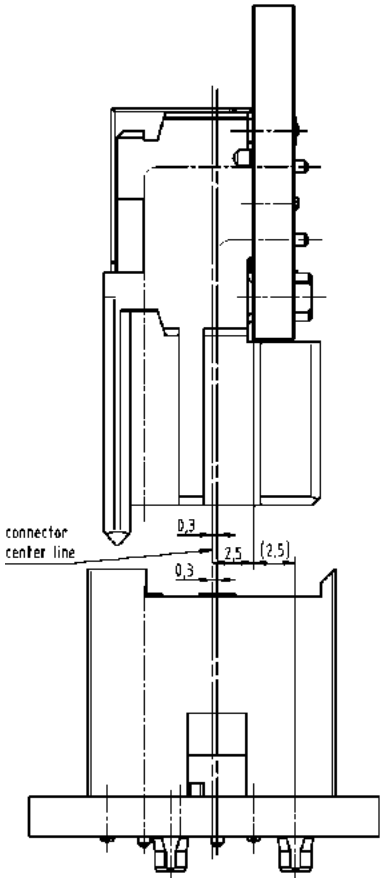

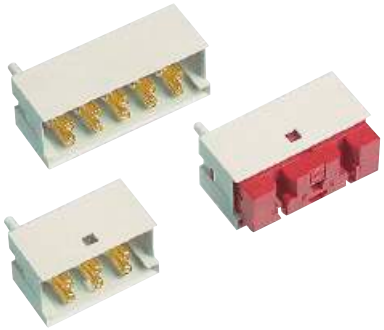

Straight modules

Identification	Number of contacts	SU	loaded positions	Part number
Mini Coax modules, press-in termination	10	1.50	2, 5, 8, 11, 14	07 11 100 0026
	8	1.25	2, 5, 8, 11	07 11 100 0024
	6	1	2, 5, 8	07 11 100 0023
	4	1	2, 8	07 11 900 0024
	2	1	2	07 11 900 0023

Dimensions

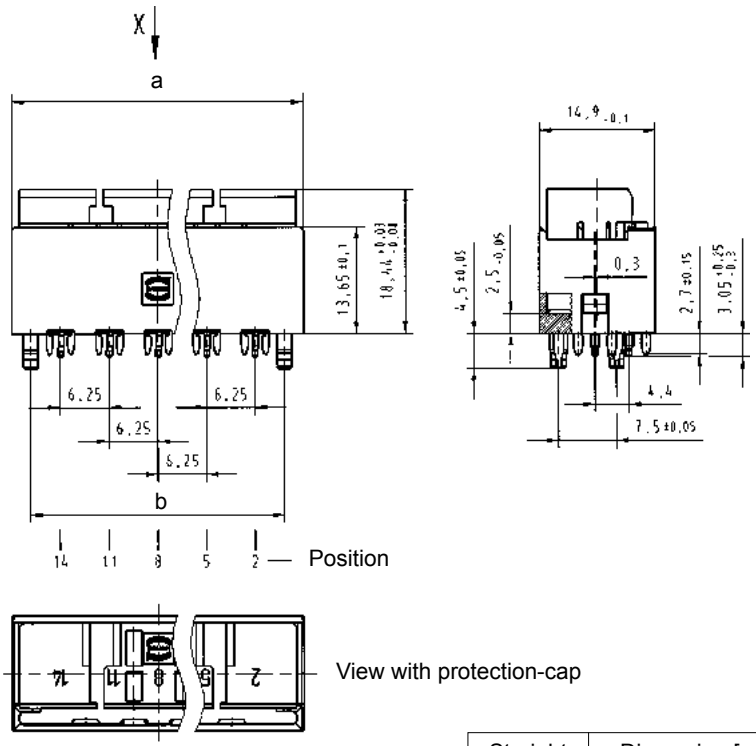

View with protection-cap

Straight module	Dimension [mm] a	b	c
1.50 SU	37.3	32.5	25
1.25 SU	31.05	26.25	18.75
1.00 SU	24.8	20	12.5

Board drillings

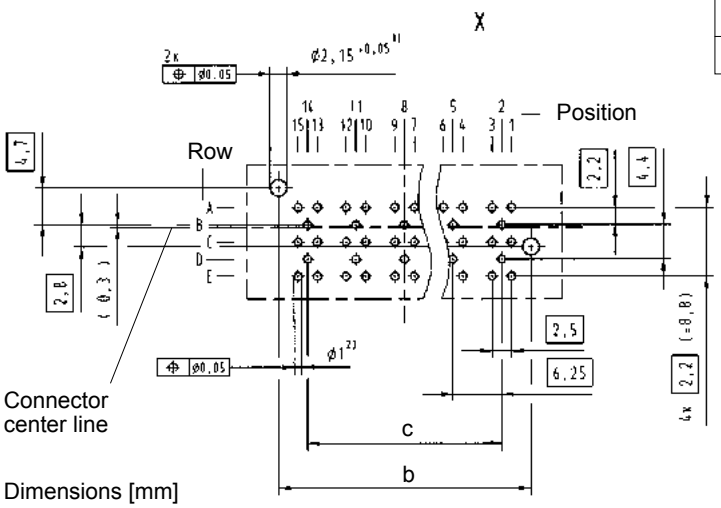

Row B, D: position 2, 5, 8, 11, 14 for signal line

Row A, C, E: position 1, 3, 4, 6, 7, 9, 10, 12, 13, 15 for ground-line

1) Non-metallised drillings

2) Details see page 10.07

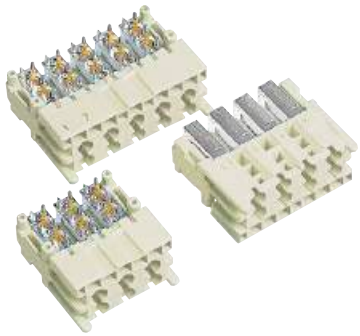

Angled modules

Identification	Number of contacts	SU	loaded positions	Part number
Mini Coax modules, press-in termination	10	1.50	2, 5, 8, 11, 14	07 31 100 0021
	8	1.25	2, 5, 8, 11	07 31 100 0020
	6	1	2, 5, 8	07 31 100 0019
	4	1	2, 8	07 31 900 0022
	2	1	2	07 31 900 0021

Dimensions

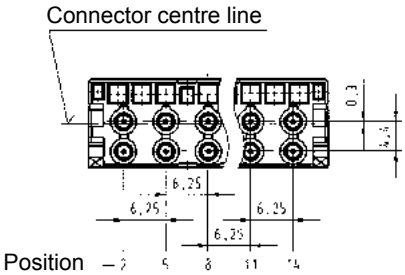

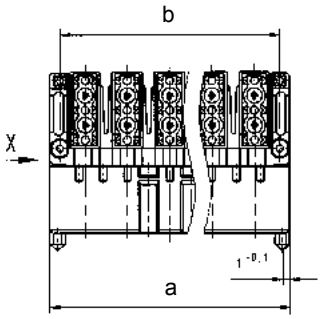

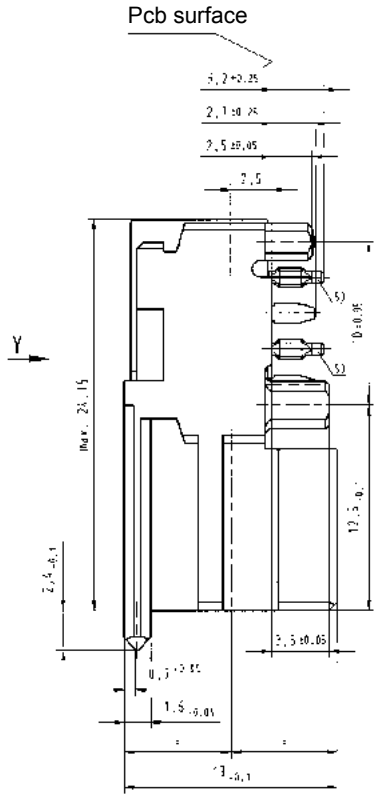

(View magnified)

Board drillings

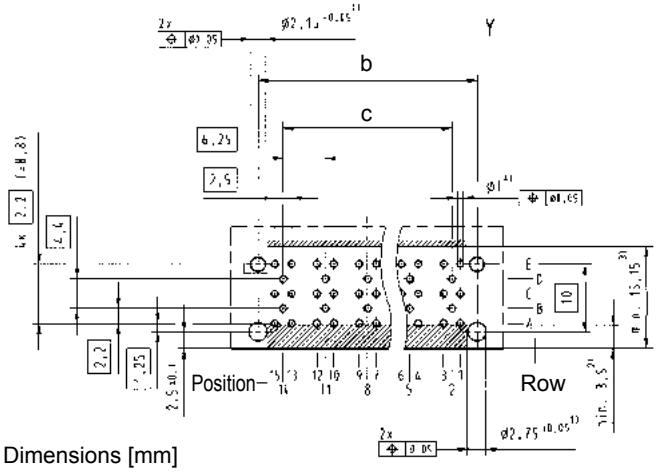

Dimensions [mm]

Angled module	Dimension [mm] a	b	c
1.50 SU	35.45	32.5	25
1.25 SU	29.15	26.25	18.75
1.00 SU	22.9	20	12.5

Row B, D: position 2, 5, 8, 11, 14 for signal line

Row A, C, E: position 1, 3, 4, 6, 7, 9, 10, 12, 13, 15 for ground-line

1) Non-metallised drillings

2) No tracks, except solder eyes

3) Limit area of components (valid for both pcb-sides)

4) Details see page 10.07

5) Press-in zone in any angular position related to it's longitudinal axis possible

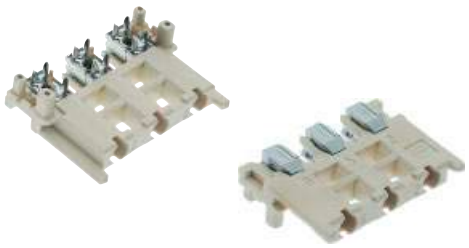

Angled modules

Identification	Number of contacts	SU	loaded positions	Part number
Mini Coax single-row module, press-in termination	3	1	2, 5, 8	07 31 100 0028

Dimensions

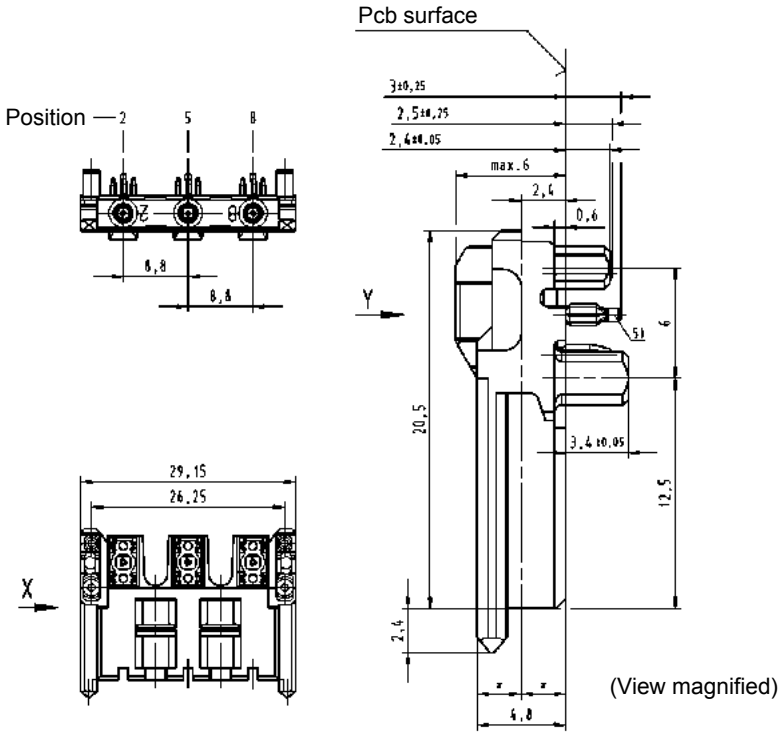

Board drillings

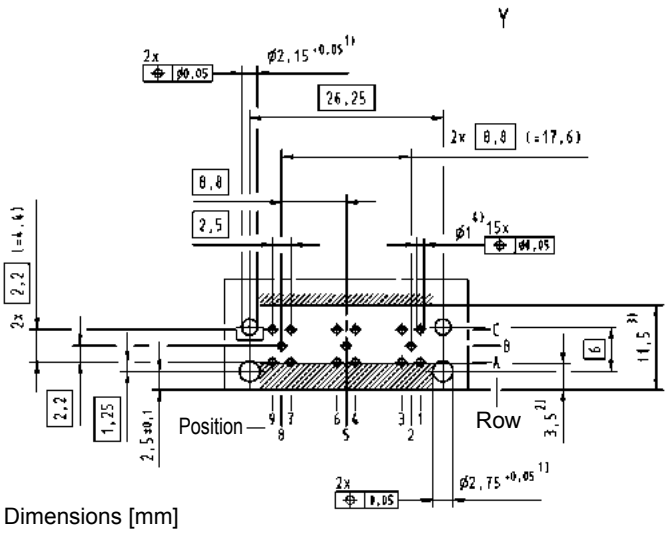

Dimensions [mm]

Row B: position 2, 5, 8 for signal line

Row A, C: position 1, 3, 4, 6, 7, 9 for ground-line

1) Non-metallised drillings

2) No tracks, except solder eyes

3) Limit area of components (valid for both pcb-sides)

4) Details see page 10.07

5) Press-in zone in any angular position related to it's longitudinal axis possible

The Mini Coax product range also includes various cable assemblies and accessories, which provide customers with flexible application options.

The Mini Coax cable connector is available as plug and socket and is crimped to a coaxial cable that can be individually assembled with RF-cable connectors (SMA, SMB, N-type …). While delivering high RF transmission performance, the moulded Mini Coax cable assemblies provide robust connections. The various angle mould types meet different cable routing requirements according to the available space. Thanks to various accessories, such as backplane frame, Han® housing insert and press-in cable housing …, customized connecting requirements can be met.

Remark:
The cable assemblies and accessories shown are part of the overall product range.
Additional, customized parts are available on request.

Cable assemblies

Identification	Number of contacts	Part number	Drawing	Dimensions in mm
Cable assembly for mating with the angled standard module	1–10	on request	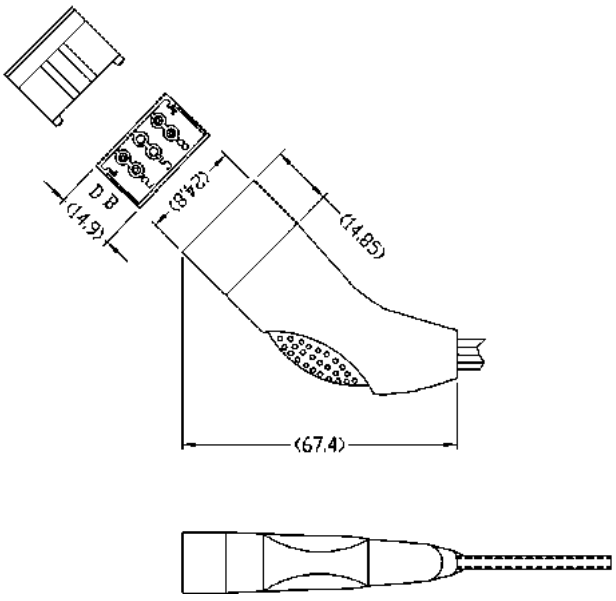	

Cable assemblies

Identification	Part number	Drawing	Dimensions in mm
Cable assembly Mini Coax, 6 position female connector (straight) to SMA crimp connector Hood: overmoulded with top entry Wiring: 1:1		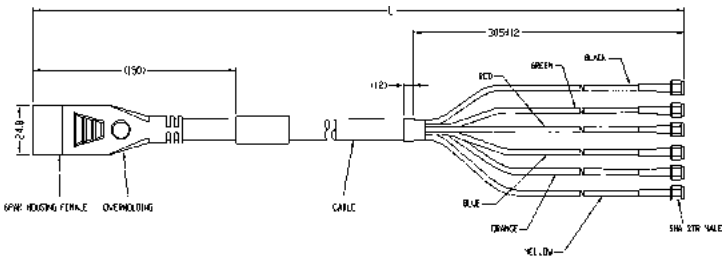	
Length: L = 0.5 m L = 1.5 m L = 2.0 m	33 07 233 0500 109 33 07 233 1500 110 33 07 233 2000 111	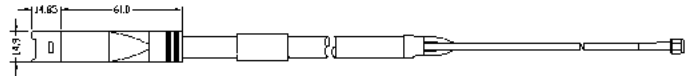	
Cable assembly Mini Coax, 6 pole, male Cable: Mini Coax cable Hood: overmoulded with top entry Wiring: 1:1		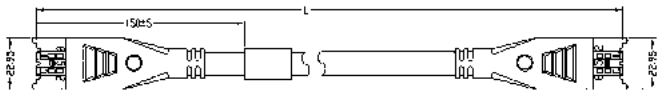	
Length: L = 0.5 m L = 1.5 m L = 2.0 m	33 07 223 0500 112 33 07 223 1500 113 33 07 223 2000 114	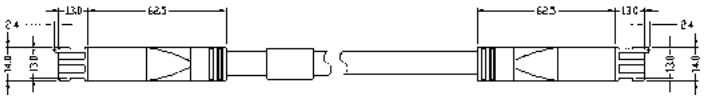	

Mini Coax

Assemblies with single-row modules and hoods/housings

Identification	Number of contacts	Part number	Drawing	Dimensions in mm
Cable assembly for mating with the angled single-row module	1–3	on request	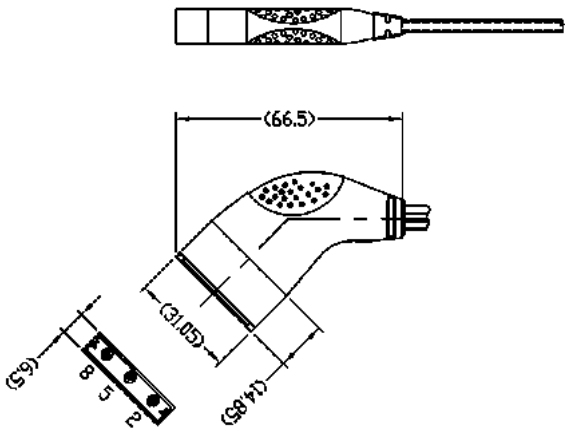	
Cable assembly with heavy duty hoods/housings	1–10	on request	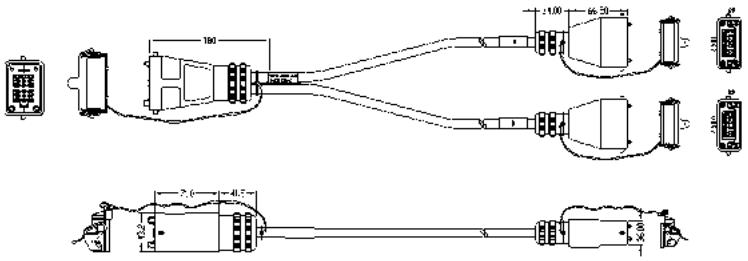	

Accessories

Identification	Part number
Backplane frame	07 71 100 0042

Dimensions [mm]

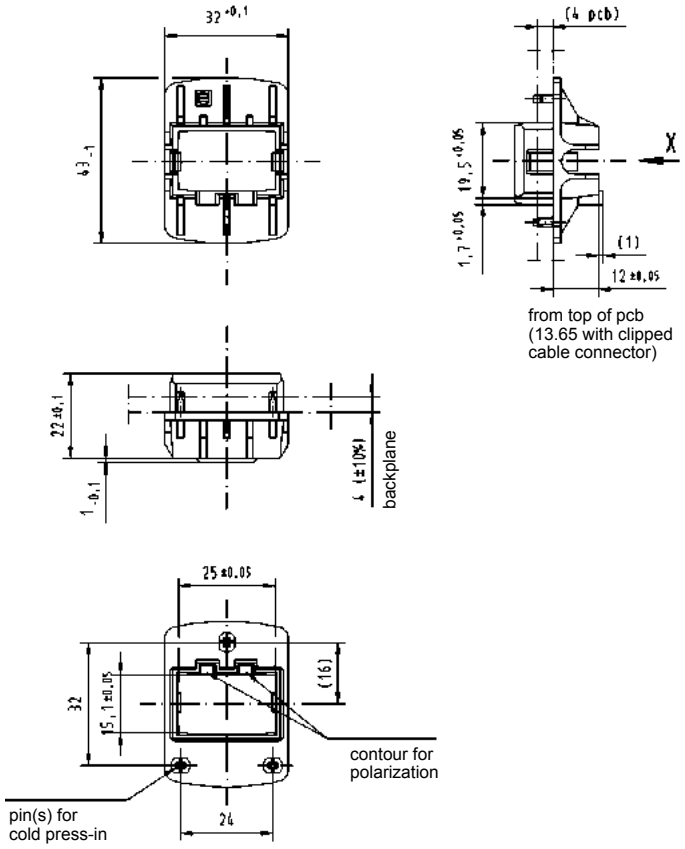

Board drillings

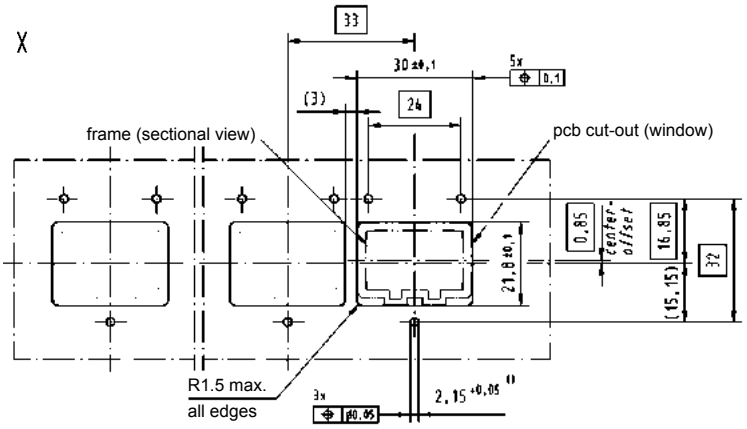

[1] Non-metallized drillings

Accessories

Identification	Part number
Test adapter SMA – Mini Coax	
male for straight modules	07 73 000 0394
female for angled modules	07 73 000 0393

General information

The Mini Coax-to-SMA Adapter can be directly connected to measurement instrument cables. This allows the precise RF transmission characterization of module cards, backplanes and cable assemblies.

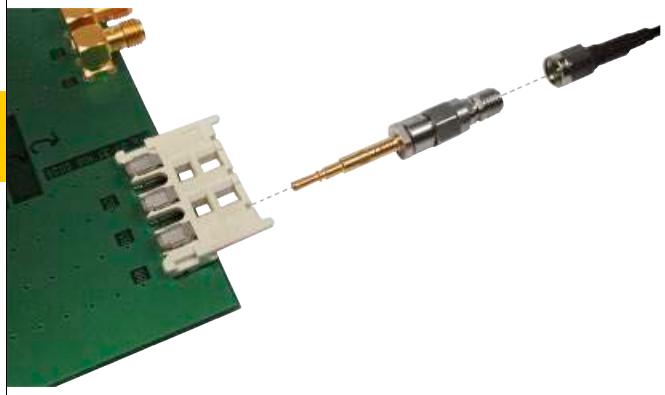

Features:
- SMA connector directly attached to the Mini Coax
- Impedance deviations between adapters < 1.5 Ω
- Good reproducibility of test results
- Test results between different labs are comparable
- Precise measurements of Mini Coax connector system

Electrical characteristics

Mini Coax test adapter	Impedance values @ 31.5 ps rise time at reference plane (10% - 90%):		Max. impedance deviation [Ω]
	Max. [Ω]	Min. [Ω]	
SMA to male	52.5	47.5	1.5
SMA to female	53.5	48.0 40.5*	1.0

Connector	Electrical length [ps]
Mated SMA to male / female adapter	262.2

Frequency [GHz]	Return loss [dB] mated adapter pairs	Insertion loss [dB] mated adapter pairs
< 1	- 26.9	- 0.17
< 2	- 22.5	- 0.24
< 3	- 19.9	- 0.26
< 4	- 16.4	- 0.34
< 5	- 14.4	- 0.42

*: Impedance drop is due to the female Mini Coax connector design.

Dimensions [mm]

Male test adapter

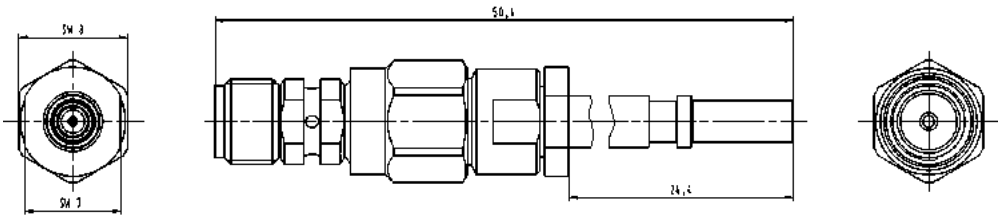

Female test adapter

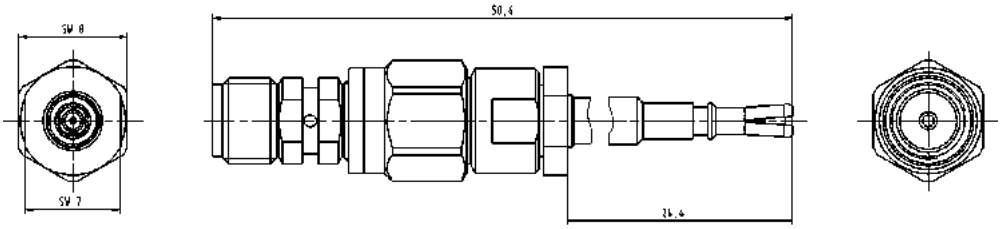

Notes

11. *har-bus® HM* Connectors

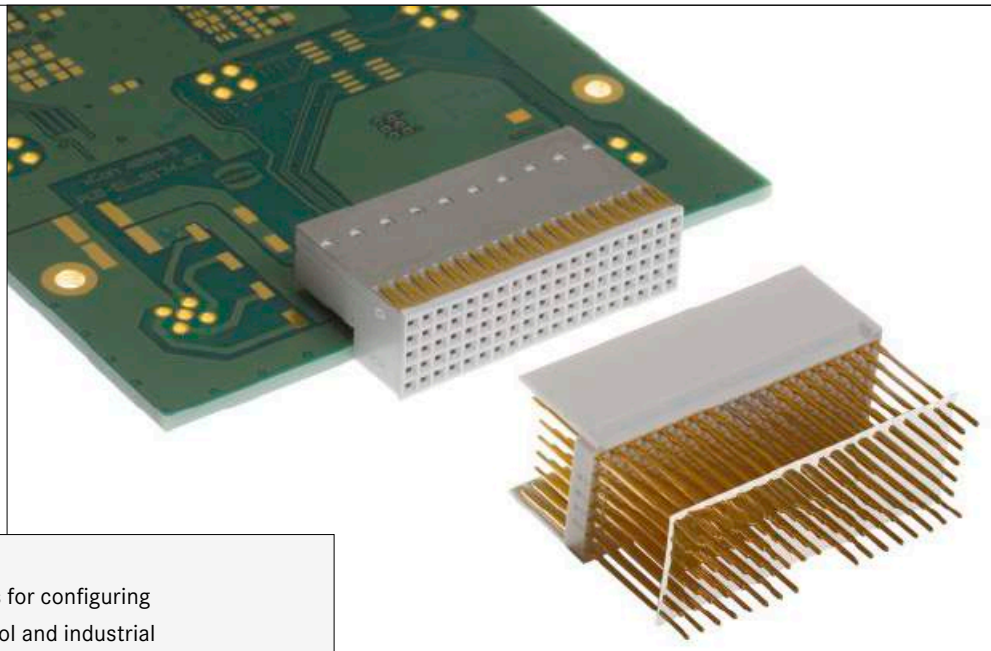

har-bus® HM connectors are the basis for configuring high-performing backplanes for control and industrial computer systems in 19” technology. These connectors are standardized for the CompactPCI and the VME64x bus.
All connectors are designed for press-in technology, the female connectors are also available as a solder version.

Application profile:

CONNECTION TYPE		ENVIRONMENT		APPLICATION						
Board to Board	Cable/ Wire to Board	IP20	IP65 / IP67	Data	Signal	Power	high performance			
							Data transfer rate	Shielding	Number of contacts, contact density	Voltage, working current
●		●		●	●	●	●	●	●	●

Cable termination

Han-Quick Lock®	*IDC*	*Crimp*
Screw	*Cage clamp*	*Axial screw*

PCB termination

THT	*SMC*	*SMT*
●		

Press-in

●

Application standard

VMEbus Technology · CompactPCI

Housing integration

Separate housing · *Integrated housing*

Contents

	Page
har-bus® HM Standard	
Introduction	**11.02**
General information and technical characteristics	**11.04**
Types A, B, AB, C with 5 + 2 rows	
Straight male connectors	**11.12**
Angled female connectors	**11.24**
Type Monoblock 47	
Straight male connectors	**11.28**
Angled female connectors	**11.30**
Types D, E, DE with 8 + 2 rows – Straight male connectors	**11.32**
har-bus® HM Power	
General information	**11.36**
Angled male connectors	**11.38**
Straight female connectors	**11.40**
Accessories	
Coding keys	**11.41**
Shrouds	**11.42**
Guiding system	**11.47**
Customer request form	**11.48**

Any possible contact configuration can be requested with the customer request forms (see pages 11.48 ff). Alternatively please contact your local HARTING representative.

HARD METRIC CONNECTORS *har-bus® HM* IN 2.00 mm PITCH

har-bus® HM connectors are the basis for configuring high-performing backplanes for control and industrial computer systems in 19” technology.
HARTING offers 5 row and 8 row 2 mm hard metric connectors *har-bus® HM* according to IEC 61 076-4-101. The product family includes all standard types such as all variants for CompactPCI, inclusive Hot Swap and CTI (Computer Telephony Integration). The modules are defined as the 5+2 row types A, B, AB and C and the 8+2 row types D, E and DE. All male and female connectors are available with press-in terminations.

The high current *har-bus® HM* Power connector complies with the OBSAI specification V1.1. This very compact connector can be loaded with up to four contacts, each contact carrying up to 23 A at 70 °C (in OBSAI configuration). The connector is offered in four lengths to allow hot swapping. The right-angled male connectors are available for press-in and for PiHIR soldering.
Accessories and press-in tooling are available for all connectors.

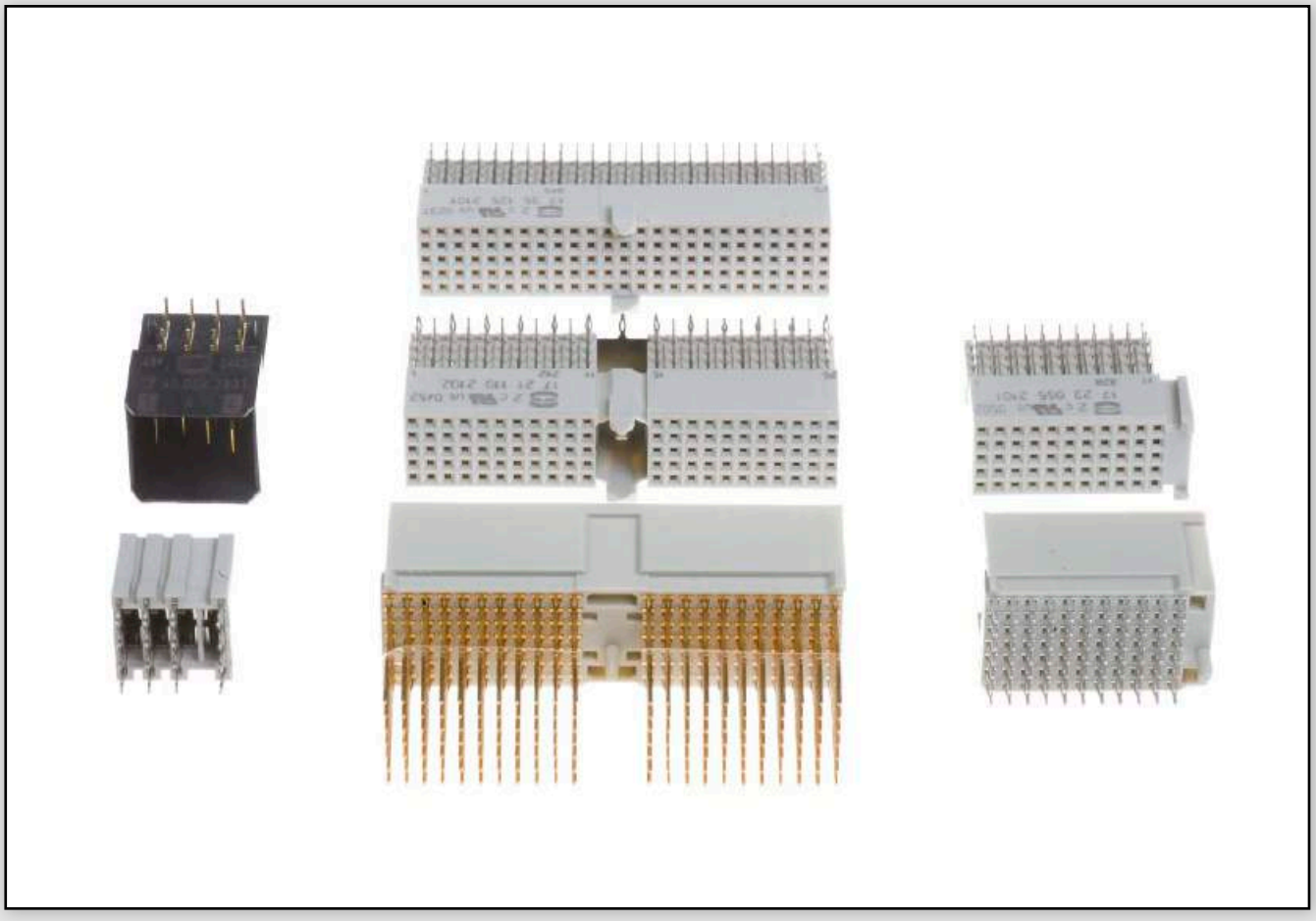

Specific features of the product range

COMBINED STYLE FOR CompactPCI:
Additional to the standard insulator types according to the specification there is a Monoblock available, especially for CompactPCI applications. It unites the type A and the type B_{22} in one connector. With the Monoblock, only one connector is necessary for a standard configuration of a 3U module card which offers a cost advantage in the production process and logistics.

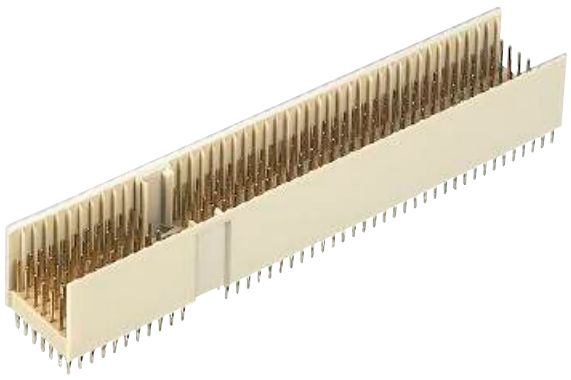

"NEEDLE-EYE" PRESS-IN TECHNOLOGY:
The *har-bus® HM* press-in zone is based on the industry renowned needle-eye technology. Its special design allows for compensation of tolerances of pcb surface properties (e.g. superfluous tin plating). The excessive material is displaced within the plated through hole, whereby a gas-tight and corrosion resistant electrical connection is assured.

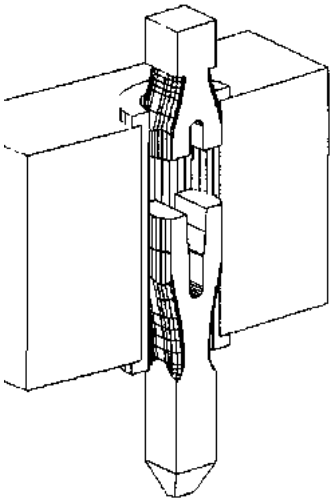

INTERNATIONAL STANDARD:
The *har-bus® HM* connectors are designed to meet the PICMG 2.x specification and can be used in CompactPCI. CompactPCI is a common standard e.g. for industrial computers.

PICMG®

CompactPCI®

Design according	:	IEC 61076-4-101
Approvals		
Underwriters Laboratories Inc.®	:	c UL us with their respective ratings documented in file E 102079
Number of contacts	:	55 – 220 signal (77 – 308 fully shielded); or customised
Contact spacing	:	2.00 mm
Working current	:	1 A @ 70 °C (80 % derating)
Test voltage $U_{r.m.s.}$	:	AC 750 V min.
Contact resistance	:	20 mΩ max.
Insulation resistance	:	10 GΩ min.
Temperature range	:	-55 °C … +125 °C
Durability as per IEC 61076-4-101	:	Performance level 2 = *250 mating cycles* in total. *First 125 mating cycles*, then 4 days gas test using 0.5 ppm SO_2 and 0.1 ppm H_2S (at 25 ± 2 °C and 75 ± 3 % humidity). Measurement of contact resistance. The *remaining 125 mating cycles* are subject to measurement of contact resistance and visual inspection. No abrasion of the contact finish through to the base material. No functional impairment. Performance level 1 = *500 mating cycles* in total. *First 250 mating cycles*, then 10 days gas test using 0.5 ppm SO_2 and 0.1 ppm H_2S (at 25 ± 2 °C and 75 ± 3 % humidity). Measurement of contact resistance. The *remaining 250 mating cycles* are subject to measurement of contact resistance and visual inspection. No abrasion of the contact finish through to the base material. No functional impairment.
Termination technique	:	**compliant press-in**
Mating force	:	0.75 N/pin max.
Withdrawal force	:	0.15 N/pin min.
Materials		
Mouldings	:	Thermoplastic resin, glass-fibre filled, UL 94-V0
Contacts	:	Copper alloy
Contact surface		
Contact zone male	:	Au/PdNi/Ni, contacts are treated with Bellcore recommended lubricant (PPE)
Contact zone female	:	Au/Ni, contacts are treated with Bellore recommended lubricant (PPE)
Press-in zone	:	Ni
Packaging	:	Tube

Due to the high deformation capability and resilience of har-bus® HM press-in contacts, they can be easily and repeatedly removed in case of repairs without impairment to their functioning.

har-bus® HM press-in contacts are extremely versatile and offer a reliable electrical contact, therefore they are especially well suited for applications with these surfaces.

Please contact us for detailed test reports.

Benefits of press-in technology

- Thermal shocks associated with the soldering process and the risk of the board malfunction are avoided.
- No need for the subsequent cleaning of the assembled pcb's
- Unlimited and efficient processing of partially gold-plated pins for rear I/O - manual soldering is no longer necessary!

Recommended configuration of plated through holes

The press-in zone of the har-bus® HM connectors is approved to be used with a plated through hole according EN 60 352-5 with a diameter of $0.60^{\pm 0.05}$ mm (drilled hole $0.7^{\pm 0.02}$ mm).

Based on our experiences regarding the production process of the PCB manufacturer, we recommend a plated through hole configuration like shown in the below spreadsheet. To achieve the recommended plated through hole diameter, it is important to specify especially the drilled hole diameter of $0.7^{\pm 0.02}$ mm to your PCB supplier.

Tin plated PCB (HAL)	Hole-Ø	$0.7^{\pm 0.02}$ mm
	Cu	min. 25 µm
	Sn	max. 15 µm
	Plated hole-Ø	0.60-0.65 mm
Chemical tin plated PCB	Hole-Ø	$0.7^{\pm 0.02}$ mm
	Cu	min. 25 µm
	Sn	min. 0.8 µm
	Plated hole-Ø	0.60-0.65 mm
Au / Ni plated PCB	Hole-Ø	$0.7^{\pm 0.02}$ mm
	Cu	min. 25 µm
	Ni	3-7 µm
	Au	0.05-0.12 µm
	Plated hole-Ø	0.60-0.65 mm
Silver plated PCB	Hole-Ø	$0.7^{\pm 0.02}$ mm
	Cu	min. 25 µm
	Ag	0.1-0.3 µm
	Plated hole-Ø	0.60-0.65 mm
OSP copper plated PCB	Hole-Ø	$0.7^{\pm 0.02}$ mm
	Cu	min. 25 µm
	Plated hole-Ø	0.60-0.65 mm

PCB board thickness: ≥ 1.4 mm

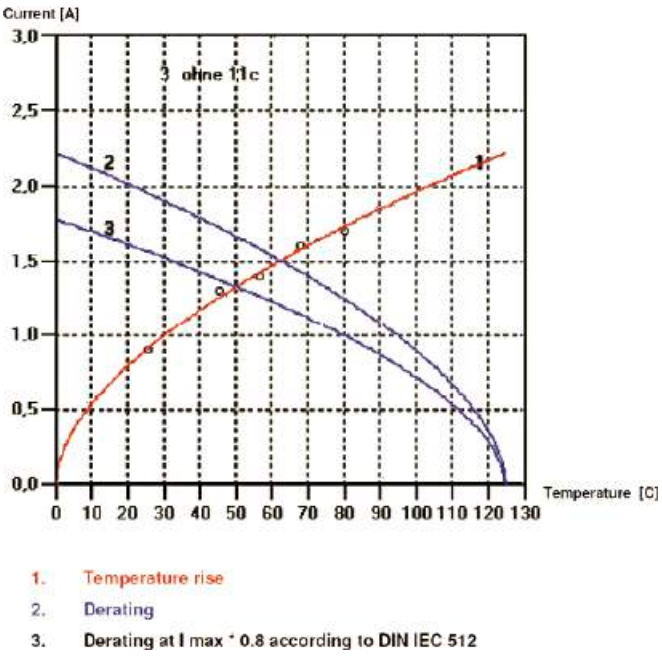

Derating curve

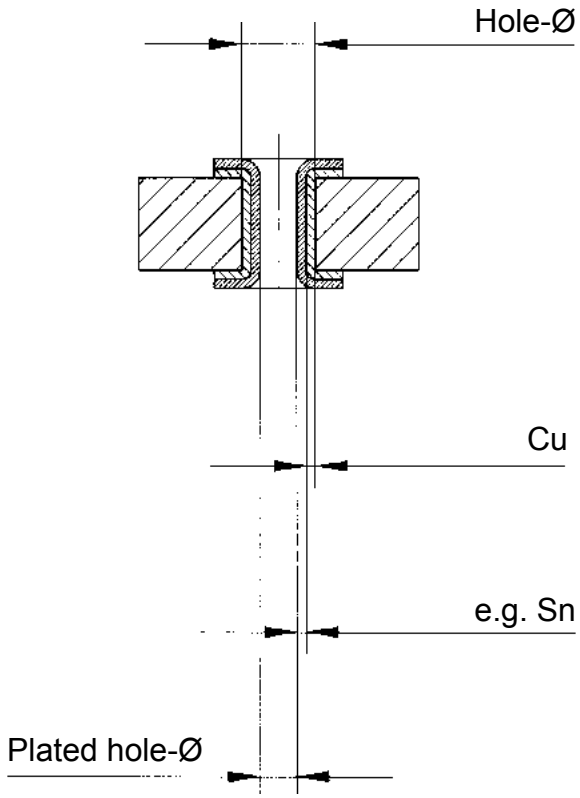

Recommended configuration of plated through holes, valid for har-bus® HM

HARTING offers 13 contact lengths for har:bus® HM male connectors: the standard mating length of 8.2 mm, pre-leading contacts with 9.7 mm and extra long contacts preferred for shielding with 11.2 mm mating length.

On the termination side the standard length is 3.7 mm. With the three termination lengths of 13.0, 14.5 and 16.0 mm even for rear I/O applications different mating levels are possible, depending on the pcb thickness and shroud height.

For the standard termination length, an extra short contact for special applications with a mating length of 7.2 mm is available.

The different contact lengths are designated with letters to identify them in the configurations. For special loadings please use the customer request form at the end of this chapter.

All contacts are offered with press-in termination 'eye of the needle'. In accordance with the application they can be delivered in performance level 1 or 2.

Contact dimensions [mm]

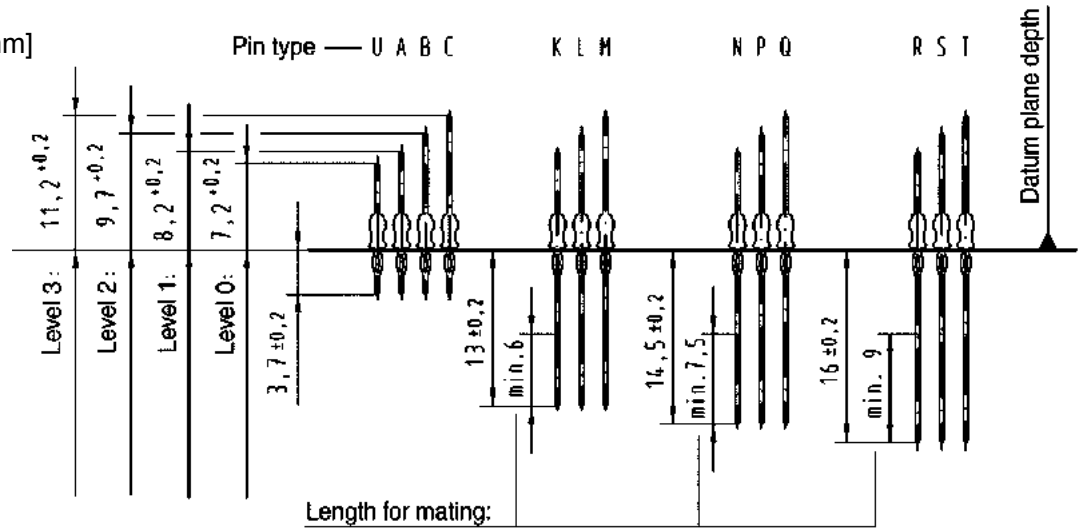

Circuit density

When using the specified diameter of the finished through hole according to IEC 61 076-4-101 (0.6 ± 0.05 mm) with an appropriate annular ring, the remaining distance between the rings is about 1 mm. Under the condition that the width of the track and the space between should be equal, two tracks of 0.2 mm width or three tracks of 0.14 mm width can be placed between two rings. Typical designs are shown in the drawing on the right side.

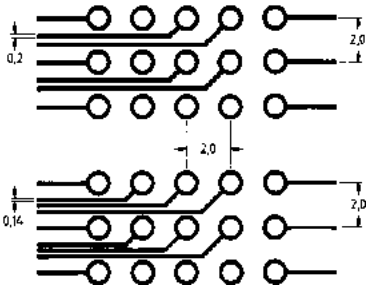

Alignment of male and female connector

For the alignment of male and female connector, a common reference plane is defined. This reference plane is the top side of the daughtercard pcb and the contact rows "b" of the female and the male connector (see drawing).

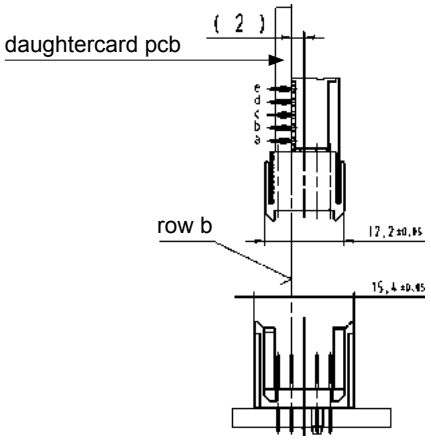

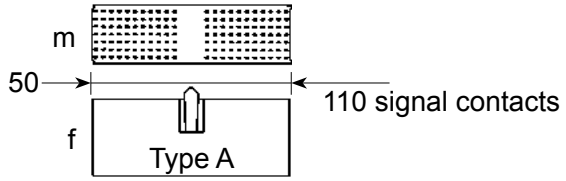

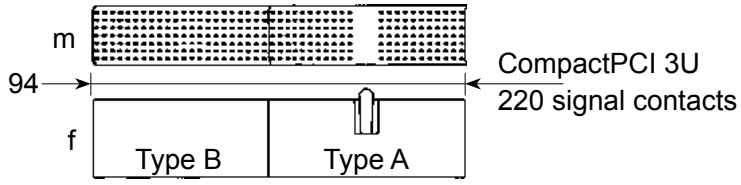

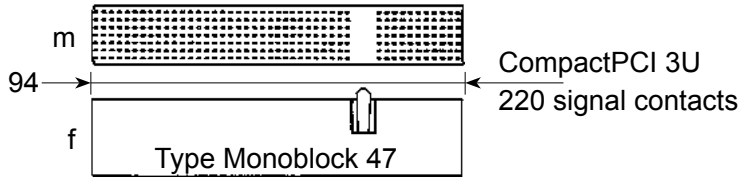

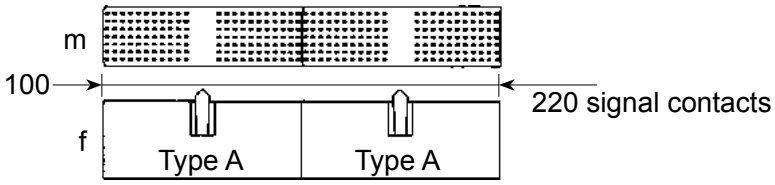

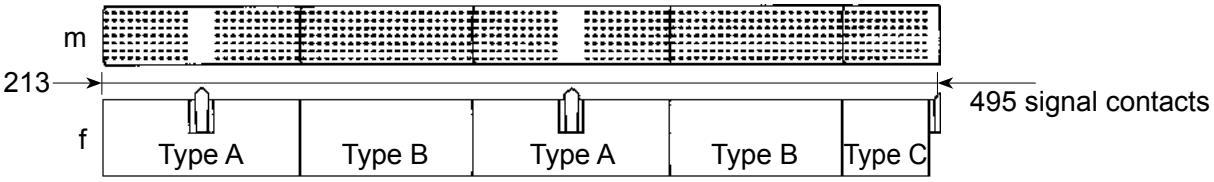

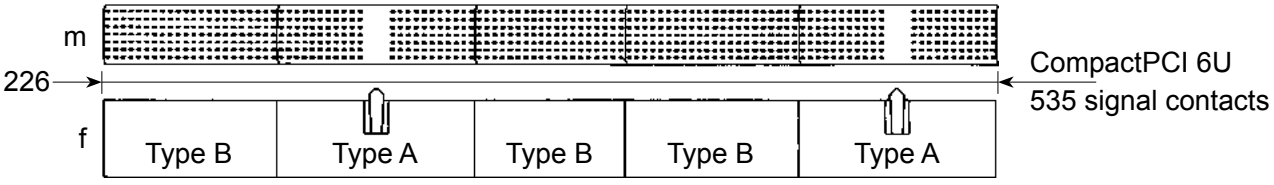

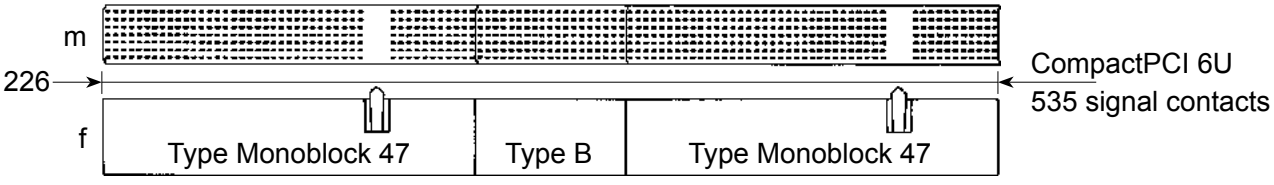

All HARTING har:bus® HM connectors can be assembled end to end in any configuration.

General rules:

- Type B connectors should always be used in combination with an A type and/or C type connectors that are fitted with alignment features.
- Type C connectors must be assembled at the end of a connector stack, to achieve polarisation and avoid mismating.
- To ensure the correct slot position of connector stacks coding can be added with type A connectors.
- Starting with an type A module (50 mm) any module can be added within the above recommendation (see typical examples shown in the diagram).

m = male connector
f = female connector

Dimensions [mm]

Improved guiding with AB-modules:

In accordance with the equipment practice each front side arrangement of har-bus® HM connectors shall have at least one A-module per slot to ensure that the connector can accommodate ± 2 mm alignment tolerances in rack systems.

On some rear I/O arrangements the A-module's alignment capability cannot be utilised, because only B-modules are used for feed through. Consequently AB-modules were introduced to ensure guiding capabilities where formerly only B-modules were used. Those AB-modules represent a combination of A- and B-modules and are specified in **CompactPCI by PICMG 2.0 Rev. 3.0** for certain rear I/O applications.

The AB-modules have guiding pegs similar (but not mating compatible to prevent mismating) to those of the A-module providing the same proven mating tolerances of ± 2 mm. The AB-modules have no coding center but are fully equiped with contacts in order to maintain the full density as per the B-modules.

The **AB-female** connector mates either with an **AB-shroud** or with **AB-male** connectors. The centered pin positions of the shielding rows of male connectors are simply equipped with short spill contacts (if standard connector and shroud are used). This prevents that the guiding peg of the female AB-module stubbing on the feed through contacts of the front side's fixed connector. These fixed connector loadings are called **AB-friendly**.

The AB-male connector will not be equiped with shielded contacts in the centre where the guiding peg will engage.

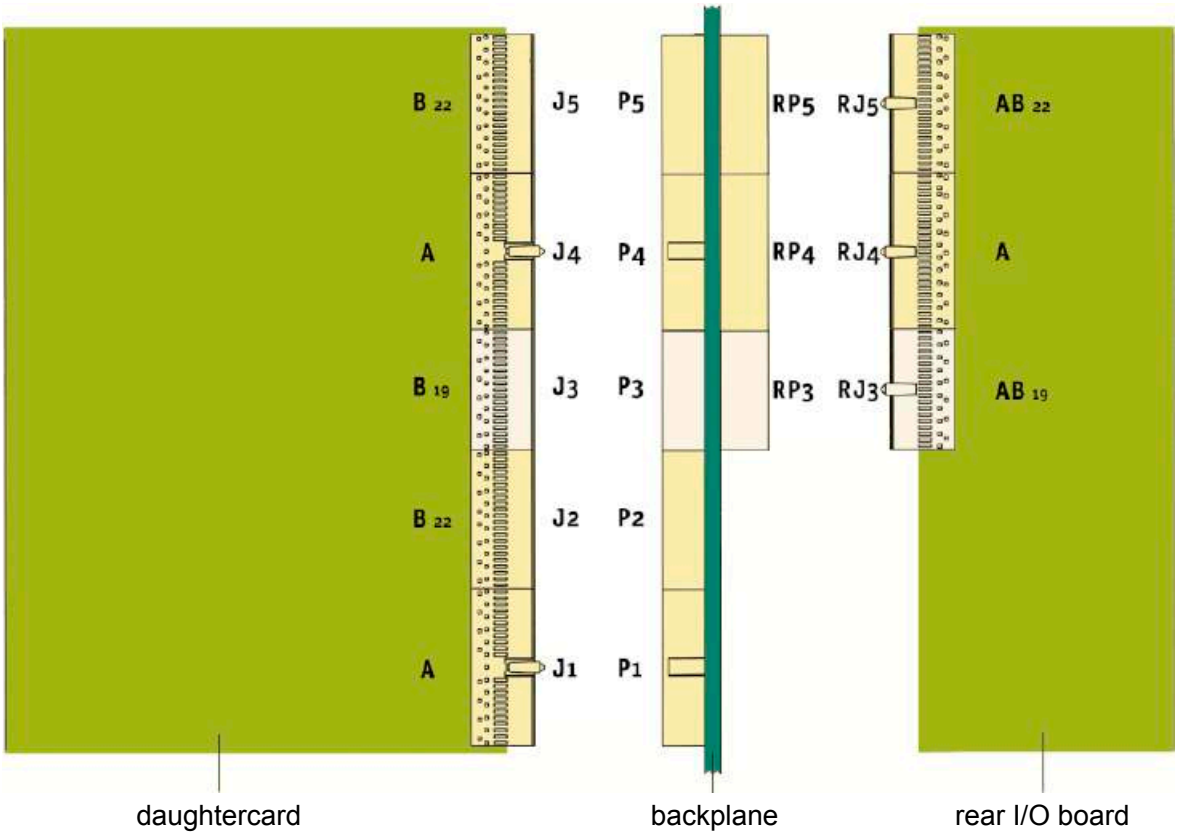

Fig. 3: CompactPCI 6U configuration

CompactPCI® as a standard is maintained and enhanced by the PCI Industrial Computer Manufacturers Group (PICMG®). It defines a combination of the electrical and logical specifications of the PCI standard and the mechanical specifications of the IEEE 1101 and IEC 60297 series of standards. The board connector has been developed from the IEC 61076-4-101 series of 2.0 mm connectors. The mounting location and dimensions for the 2.0 mm connectors are specified in IEEE 1101.11. Some additional mechanical definitions for 2.0 mm connectors in the Eurocard format are being specified in the VITA 30 draft.

Other international standards are listed in the *CompactPCI*® standard for environmental and

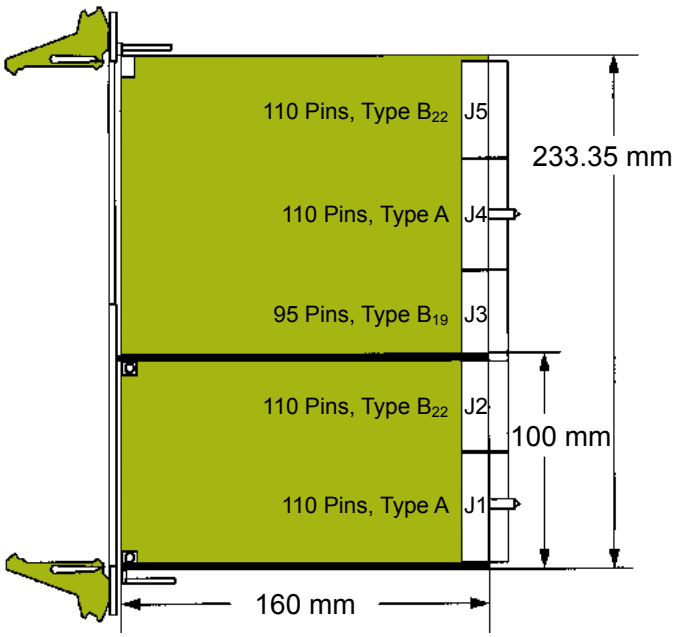

related specifications. This gives *CompactPCI*® a solid foundation of international standards and practices for mechanical robustness.

The board format is either a 3U or a 6U Eurocard as defined in IEC 60297. There are two or five connectors specified for 3U or 6U boards respectively. Connectors are numbered from J1/P1 through J5/P5 (bottom to top) on the board or backplane.

Slave or peripheral boards need J1/P1 as a minimum, master or system boards need both J1/P1 and J2/P2 as a minimum. Backplanes should always have the full complement of

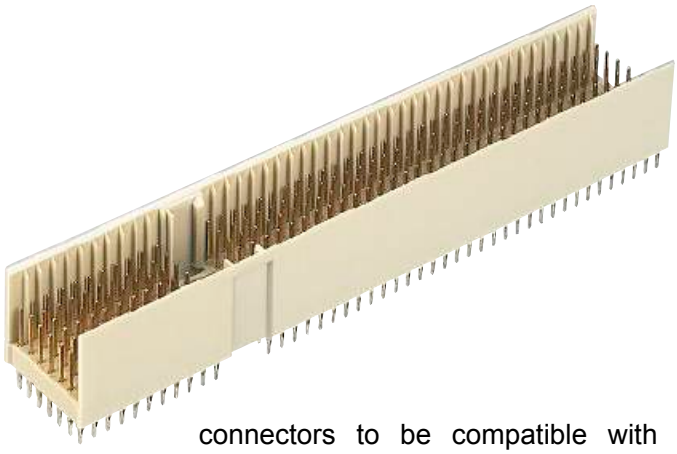

connectors to be compatible with any type of board. As opposed to the CPCI standard (pins numbered from bottom to top), the contact numbers on the connector are numbered from top to bottom (according to the IEC standard).

The front panel of CPCI cards may be equipped with additional keying pegs to code individual board types. There is also an extended pin length to remove any electro static charge before contacts on the rear connnectors mate.

This pin also functions as a mechanical guide to position the board as straight as possible for insertion. This prevents pin bending and lowers the insertion force.

Some applications could require up to 500 pins to be pushed into sockets simultaneously.

Connectors for high availability applications (hot swap) come with 3 different lengths of pins for a staged sequence of mate or break of contact.

Connector J1/P1 carries the signals for a 32 bit PCI bus (see table of contact assignments for J1/P1). Connector J2/P2 on a system card has the additional signals for a 64 bit PCI bus and some user-defined I/O (see table of contact assignments for J2/P2). On slave cards all of J2/P2 might be user-defined I/O except the top row which carries the signals for geographical addressing. J3/P3 should be reserved for other system bus definitions. J4/P4 and J5/P5 are used for I/O or secondary buses, e.g. H.110 in telecom applications or for bridges into other buses like VMEbus.

This is used to accommodate two bus platforms in one card cage on one backplane.

Contact assignment on *CompactPCI*® system position (J1/P1)

	a	b	c	d	e	
25	+5 V	REQ64#	ENUM#	+3,3 V	+5 V	25
24	AD[1]	+5 V	V(I/O)	AD[0]	ACK64#	24
23	+3,3 V	AD[4]	AD[3]	+5 V	AD[2]	23
22	AD[7]	GND	+3,3 V	AD[6]	AD[5]	22
21	+3,3 V	AD[9]	AD[8]	M66EN	C/BE[0]#	21
20	AD[12]	GND	V(I/O)	AD[11]	AD[10]	20
19	+3,3 V	AD[15]	AD[14]	GND	AD[13]	19
18	SERR#	GND	+3,3 V	PAR	C/BE[1]#	18
17	+3,3 V	SDONE	SBO#	GND	PERR#	17
16	DEVSEL#	GND	V(I/O)	STOP#	LOCK#	16
15	+3,3 V	FRAME#	IRDY#	GND	TRDY#	15
14						14
13			Key Area			13
12						12
11	AD[18]	AD[17]	AD[16]	GND	C/BE[2]#	11
10	AD[21]	GND	+3,3 V	AD[20]	AD[19]	10
9	C/BE[3]#	IDSEL	AD[23]	GND	AD[22]	9
8	AD[26]	GND	V(I/O)	AD[25]	AD[24]	8
7	AD[30]	AD[29]	AD[28]	GND	AD[27]	7
6	REQ#	GND	+3,3 V	CLK	AD[31]	6
5	Bus Reserved	Bus Reserved	RST#	GND	GNT#	5
4	Bus Reserved	GND	V(I/O)	INTP	INTS	4
3	INTA#	INTB#	INTC#	+5 V	INTD#	3
2	TCK	+5 V	TMS	TDO	TDI	2
1	+5 V	-12 V	TRST#	+12 V	+5 V	1
	a	b	c	d	e	

Contact assignment on *CompactPCI*® system position (J2/P2)

	a	b	c	d	e	
22	GA4	GA3	GA2	GA1	GA0	22
21	CLK6	GND	Reserved	Reserved	Reserved	21
20	CLK5	GND	Reserved	GND	Reserved	20
19	GND	GND	Reserved	Reserved	Reserved	19
18	Bus Reserved	Bus Reserved	Bus Reserved	GND	Bus Reserved	18
17	Bus Reserved	GND	PRST#	REQ6#	GNT6#	17
16	Bus Reserved	Bus Reserved	DEG#	GND	Bus Reserved	16
15	Bus Reserved	GND	FAL#	REQ5#	GNT5#	15
14	AD[35]	AD[34]	AD[33]	GND	AD[32]	14
13	AD[38]	GND	V(I/O)	AD[37]	AD[36]	13
12	AD[42]	AD[41]	AD[40]	GND	AD[39]	12
11	AD[45]	GND	V(I/O)	AD[44]	AD[43]	11
10	AD[49]	AD[48]	AD[47]	GND	AD[46]	10
9	AD[52]	GND	V(I/O)	AD[51]	AD[50]	9
8	AD[56]	AD[55]	AD[54]	GND	AD[53]	8
7	AD[59]	GND	V(I/O)	AD[58]	AD[57]	7
6	AD[63]	AD[62]	AD[61]	GND	AD[60]	6
5	C/BE[5]#	GND	V(I/O)	C/BE[4]#	PAR64	5
4	V(I/O)	Bus Reserved	C/BE[7]#	GND	C/BE[6]#	4
3	CLK4	GND	GNT3#	REQ4#	GNT4#	3
2	CLK2	CLK3	SYSEN#	GNT2#	REQ3#	2
1	CLK1	GND	REQ1#	GNT1#	REQ2#	1
	a	b	c	d	e	

In mechanical terms J1/P1 is a 25x5 matrix of contacts. Three rows of 5 contacts (rows 12 - 14) are not used for electrical contacts. Instead, plastic keys of different orientation and configuration are used to key board locations as to system or peripheral slot, voltage options, etc.

J2/P2 is a shortened connector with only 22 rows of contacts instead of 25 rows for a standard size. HARTING now offers monolithic versions with J1/P1 and J2/P2 combined in one single connector.

This combination together with some space left on the card to fit into guide rails makes maximum use of the 100 mm rear edge of the 3U Eurocard.

On a 6U card this connector setup is repeated on J4/P4 and J5/P5.

The J3/P3 connector is a shortened version of the 2.0 mm connector with 19 rows of 5 signal contacts.

The size results from the height of a 6U board (233 mm) which is more than double the height of a 3U board.

All connectors used for *CompactPCI*® are based on a 7 column pitch. The inner 5 columns are used for logic signals and power. The outer columns on either side are reserved for shielding or ground.

PICMG®

Executive Member

The VMEbus has evolved over a period of more than 25 years to become the leading bus architecture in open industrial applications. The specification is an ANSI norm, the original specification has been extended to become a draft standard VME64x ANSI/VITA 1.1-1997. This draft standard includes the specification for the 5-row DIN compatible connector (IEC 61076-4-113) and for a centre connector J0/P0 on 6U VME cards, which is identical to J3/P3 in *CompactPCI*® systems.

In VMEbus systems it is possible to use custom connectors in the J0/P0 area (e.g. coax connectors). To prevent problems with non-mating backplanes it is strongly recommended to use front panel keying. The IEEE 1101 documents J0/P0 can also be used with rear transition modules for pluggable I/O cabling. As mentioned above, the contacts on this connector may be bussed. One example is the ATM CellBus, which is in the process of being standardised. The bus on J0/P0 connectors might actually be a plug-on mezzanine backplane rather than conducting traces integrated into the backplane itself.

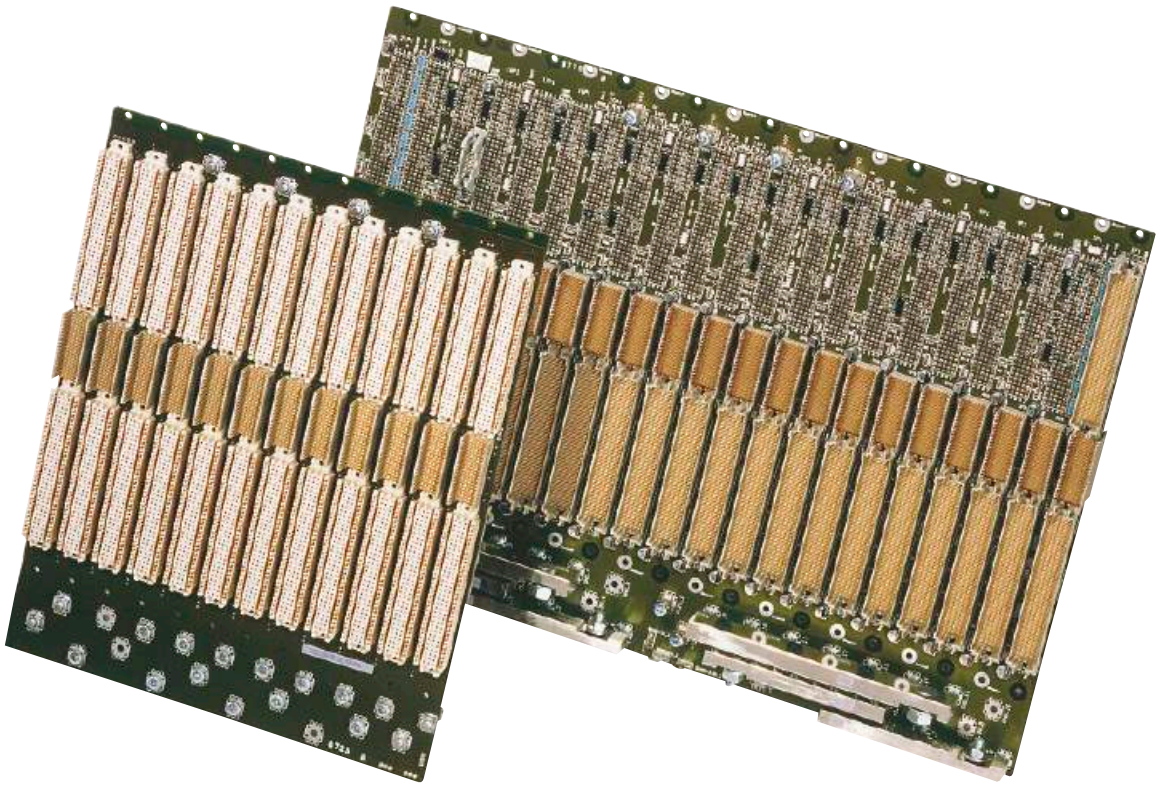

The 2.0 mm J0/P0 connector in VME64x systems is used for additional I/O, for new high speed sub busses or I/O for mezzanine modules, e.g. IP modules on VMEbus boards. The connector is placed on the Eurocard to work in combination with the non-metric original VMEbus connectors DIN 41612 type C or the newer 5-row connector har-bus® 64. The mounting location and dimensions for the J0/P0 VMEbus connector (IEC 61076-4-101) is specified in IEEE 1101.11. The VMEbus 2.0 mm connector uses 5 columns of signal contacts and optional two additional outer columns on either side for shielding. All 95 signal contacts are user defined.

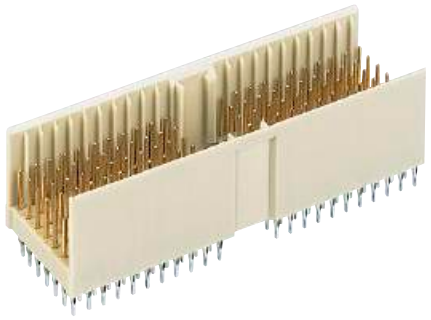

Male connectors, straight

Identification	No. of contacts	Contact length [mm] mating side	Contact length [mm] termination side	Part number	Contact configuration
Type A	110	8.2	3.7	17 01 110 1201 **17 01 110 2201**	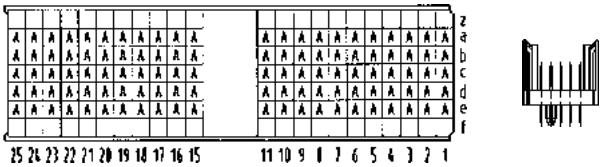
Type A	132	8.2/ 11.2	3.7	17 01 132 1203 **17 01 132 2203**	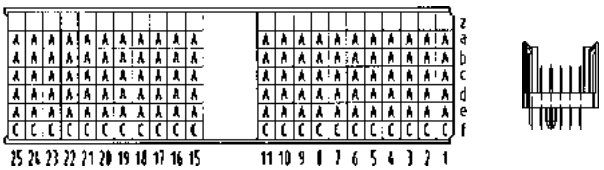
Type A	132	8.2/ 11.2	3.7/ 13.0/ 16.0	17 01 132 1007 **17 01 132 2007**	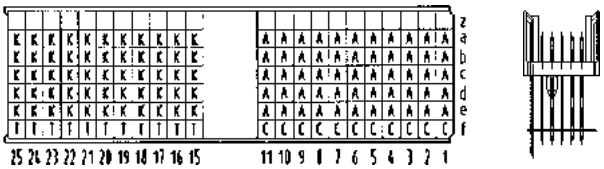
Type A	154	8.2/ 11.2	3.7	17 01 154 1201 **17 01 154 2201**	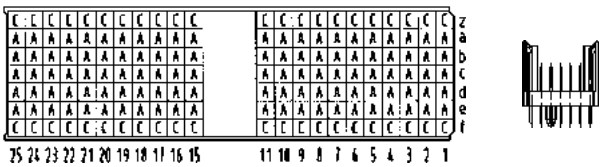
Type A	110	9.7	3.7	17 01 110 1204 **17 01 110 2204**	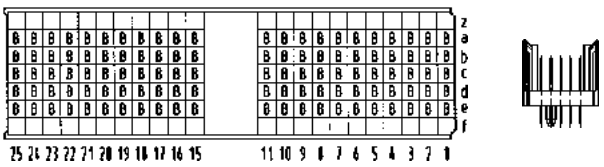
Type A	154	9.7/ 11.2	3.7	17 01 154 1205 **17 01 154 2205**	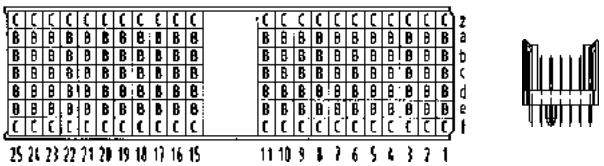

Thin print part numbers: performance level 1
Bold print part numbers: performance level 2
Connector dimensions see page 11.14

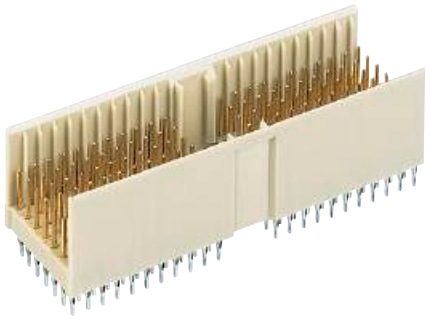

Male connectors, straight

Identification	No. of contacts	Contact length [mm] mating side	Contact length [mm] termination side	Part number	Contact configuration
Type A	110	8.2	13.0	17 01 110 1402 **17 01 110 2402**	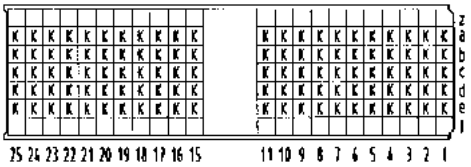 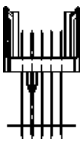
Type A	154	9.7/ 11.2	14.5/ 16.0	17 01 154 1001 **17 01 154 2001**	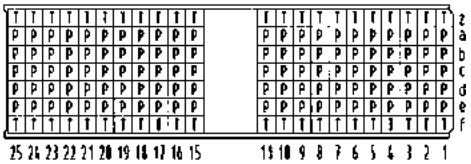 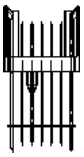
Type A CompactPCI Position P1	154	8.2/ 9.7/ 11.2	3.7	17 01 154 1203 **17 01 154 2203**	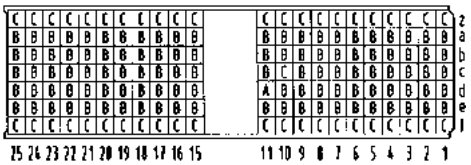
Type A CompactPCI Position P4	154	9.7/ 11.2	16.0	17 01 154 1604 **17 01 154 2604**	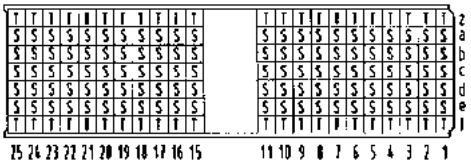 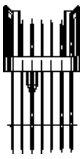
Type A CompactPCI Position P4	154	8.2/ 9.7/ 11.2	16.0	17 01 154 1603 **17 01 154 2603**	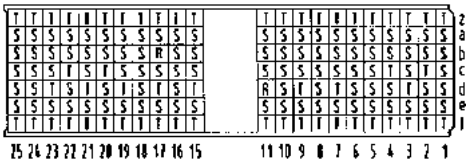 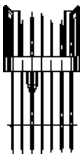
Type A CompactPCI hot swap Position P1	154	8.2/ 9.7/ 11.2	3.7	17 01 154 1204 **17 01 154 2204**	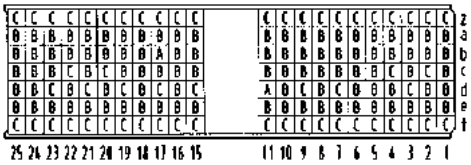

Thin print part numbers: performance level 1
Bold print part numbers: performance level 2
Connector dimensions see page 11.14

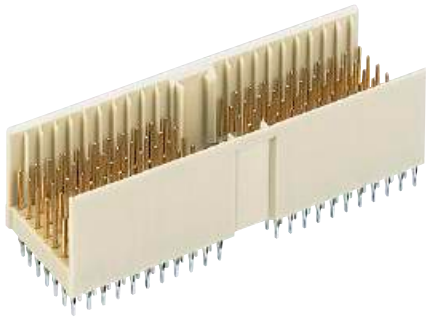

Male connectors, straight

Identification	No. of contacts	Contact length [mm] mating side	Contact length [mm] termination side	Part number	Contact configuration
Type A CompactPCI computer telephony Position P4	100	8.2/ 9.7/ 11.2	13.0/ 14.5/ 16.0	17 01 100 1001 **17 01 100 2001**	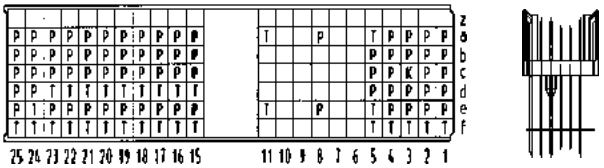
Type A CompactPCI computer telephony Position P4	100	8.2/ 9.7/ 11.2	3.7	17 01 100 1201 **17 01 100 2201**	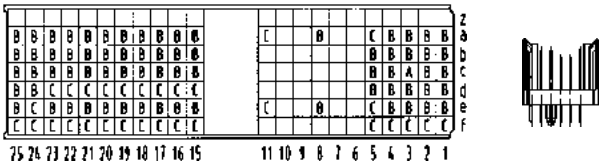

Contact dimensions [mm]

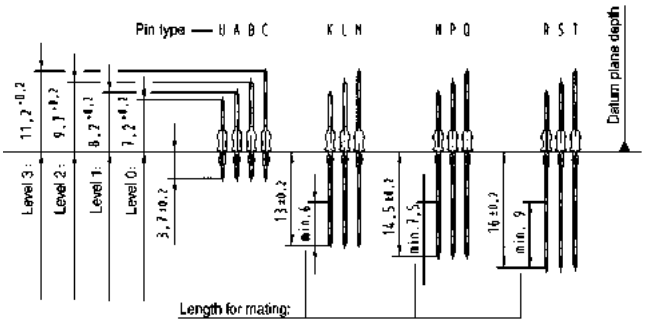

Connector dimensions [mm]

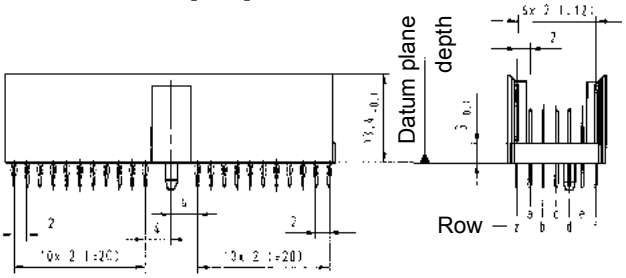

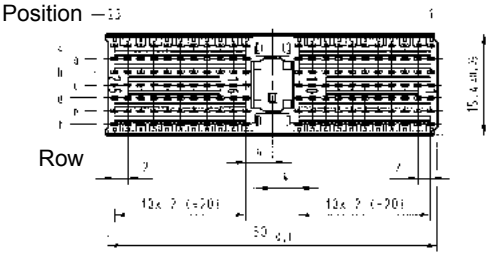

Board drillings

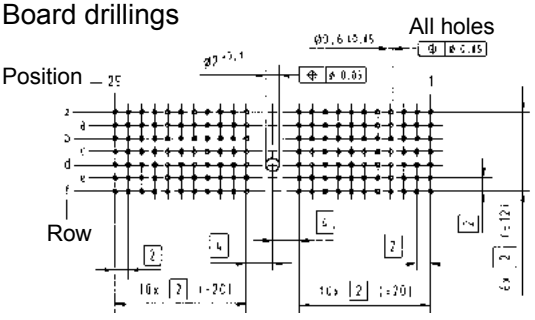

Thin print part numbers: performance level 1
Bold print part numbers: performance level 2

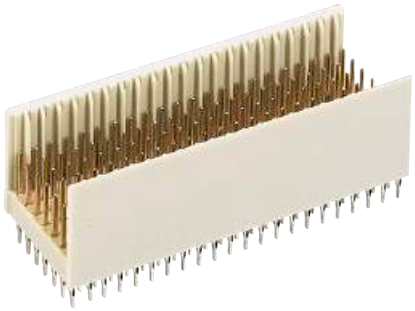

Male connectors, straight

Identification	No. of contacts	Contact length [mm] mating side	Contact length [mm] termination side	Part number	Contact configuration
Type B_{25}	125	8.2	3.7	17 02 125 1201 **17 02 125 2201**	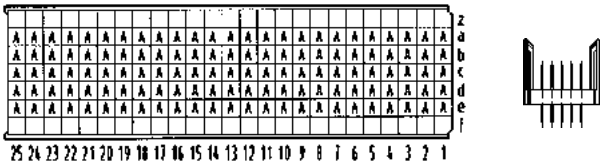
Type B_{25}	150	8.2/ 11.2	3.7	17 02 150 1201 **17 02 150 2201**	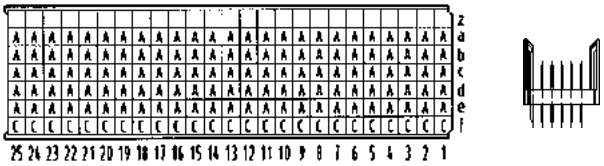
Type B_{25}	175	8.2/ 11.2	3.7	17 02 175 1201 **17 02 175 2201**	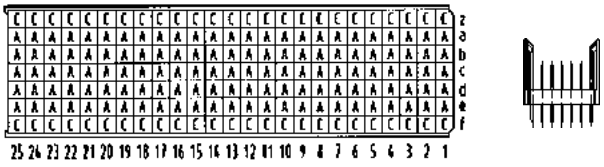
Type B_{25}	125	9.7/ 11.2	3.7	17 02 125 1205 **17 02 125 2205**	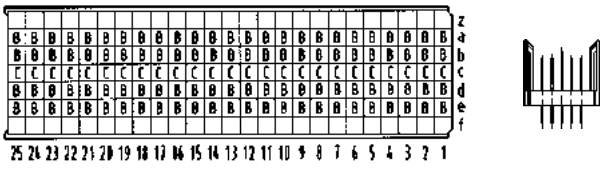
Type B_{25}	175	8.2/ 9.7/ 11.2	3.7	17 02 175 1202 **17 02 175 2202**	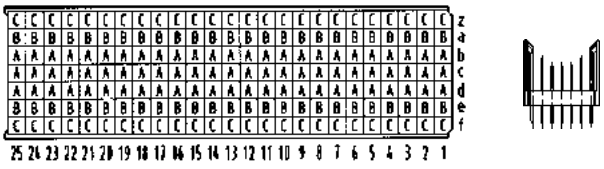
Type B_{25}	175	8.2/ 11.2	13.0/ 16.0	17 02 175 1006 **17 02 175 2006**	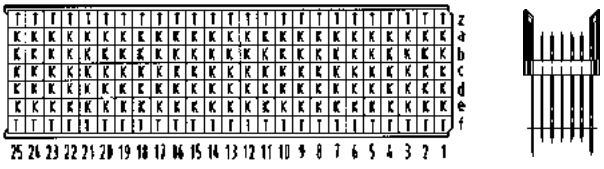

Thin print part numbers: performance level 1
Bold print part numbers: performance level 2
Connector dimensions see page 11.18

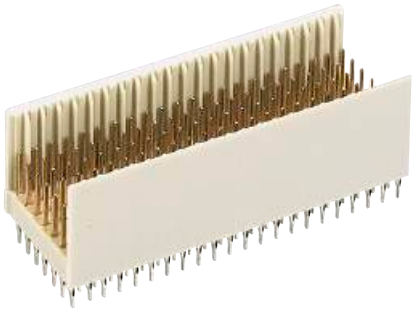

Male connectors, straight

Identification	No. of contacts	Contact length [mm] mating side	Contact length [mm] termination side	Part number	Contact configuration
Type B_{22}	110	8.2	3.7	17 04 110 1201 **17 04 110 2201**	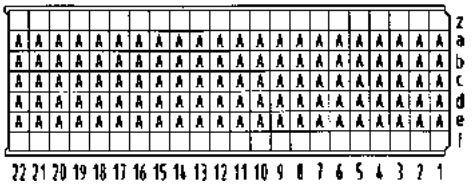
Type B_{22}	154	8.2/ 11.2	3.7	17 04 154 1201 **17 04 154 2201**	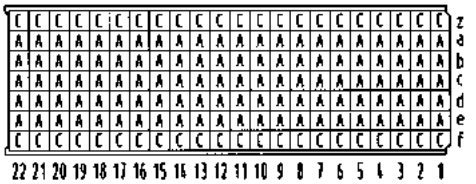 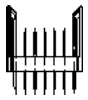
Type B_{22} CompactPCI Position P2	154	9.7/ 11.2	3.7	17 04 154 1203 **17 04 154 2203**	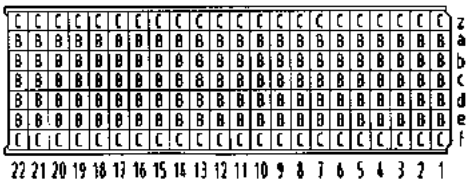
Type B_{22} CompactPCI computer telephony	132	8.2/ 9.7/ 11.2	13.0/ 14.5/ 16.0	17 04 132 1001 **17 04 132 2001**	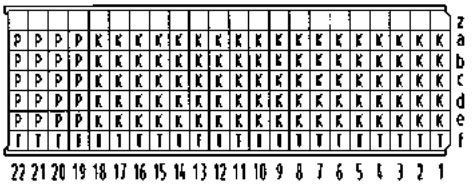 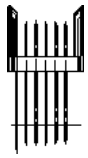
Type B_{22} CompactPCI AB friendly	154	9.7/ 11.2	3.7/ 16.0	17 04 154 1010 **17 04 154 2010**	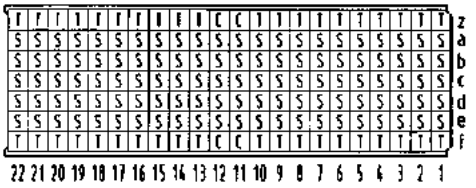 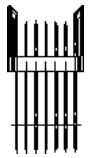
Type B_{22} CompactPCI AB friendly	154	9.7/ 11.2	3.7/ 14.5/ 16.0	17 04 154 1002 **17 04 154 2002**	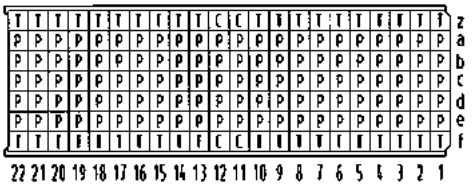 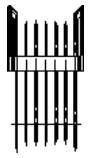

Thin print part numbers: performance level 1
Bold print part numbers: performance level 2
Connector dimensions see page 11.18

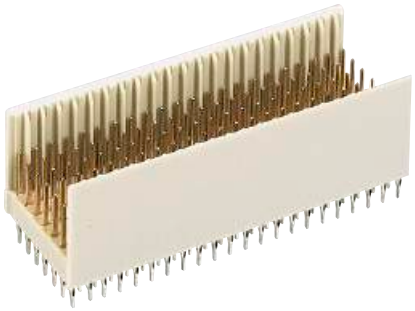

Male connectors, straight

Identification	No. of contacts	Contact length [mm] mating side	Contact length [mm] termination side	Part number	Contact configuration
Type B_{19} VME Position J0	95	8.2	3.7	17 05 095 1201 **17 05 095 2201**	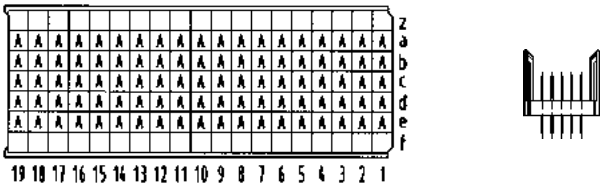
Type B_{19} VME Position J0	133	8.2/ 11.2	3.7	17 05 133 1201 **17 05 133 2201**	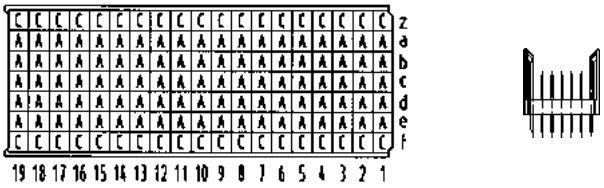
Type B_{19} VME Position J0	133	9.7/ 11.2	3.7	17 05 133 1203 **17 05 133 2203**	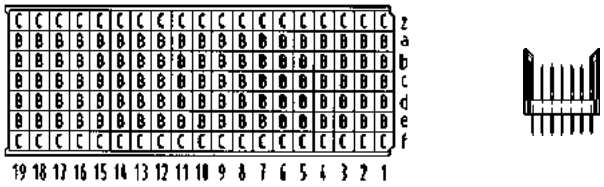
Type B_{19} VME Position J0	95	8.2	13.0	17 05 095 1401 **17 05 095 2401**	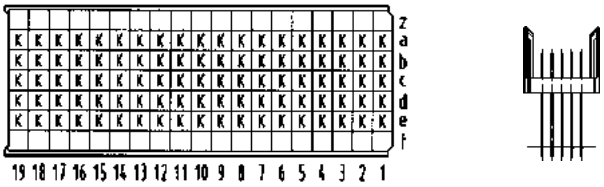
Type B_{19} CompactPCI AB friendly Position P3	133	9.7/ 11.2	3.7/ 16.0	17 05 133 1005 **17 05 133 2005**	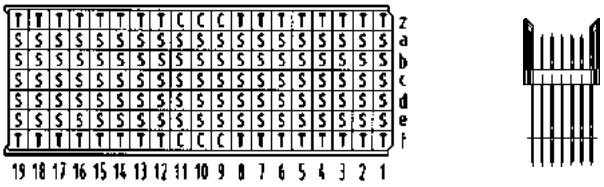
Type B_{19} Compact PCI Position P3 VME Position J0	133	8.2/ 11.2	16.0	17 05 133 1602 **17 05 133 2602**	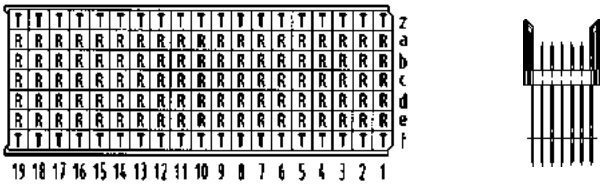

Thin print part numbers: performance level 1
Bold print part numbers: performance level 2
Connector dimensions see page 11.18

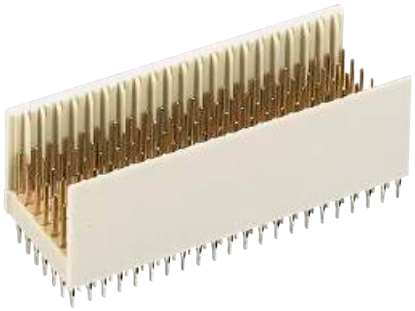

Male connectors, straight

Drawing

Dimensions in mm

Contact dimensions [mm]

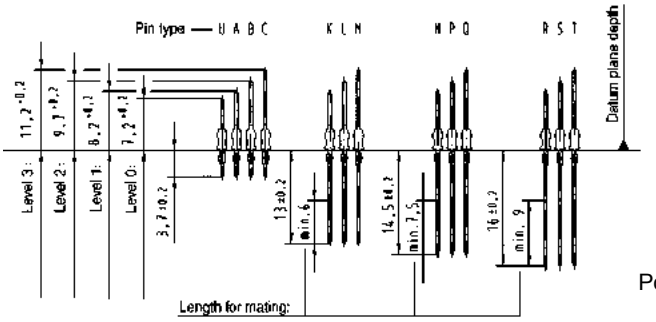

Connector dimensions [mm]

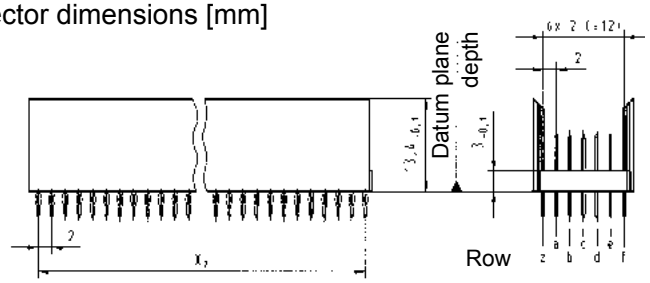

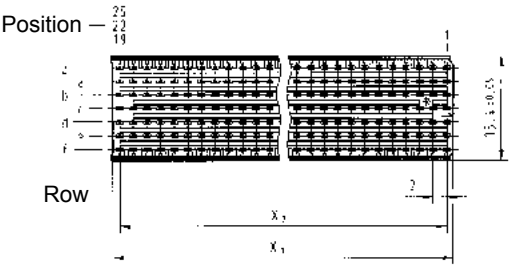

Board drillings

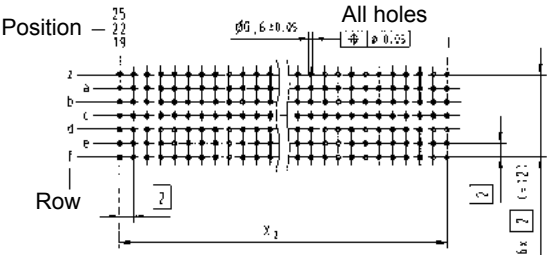

Contact positions	x_1	x_2
19	37.9	18 x 2 (= 36)
22	43.9	21 x 2 (= 42)
25	49.9	24 x 2 (= 48)

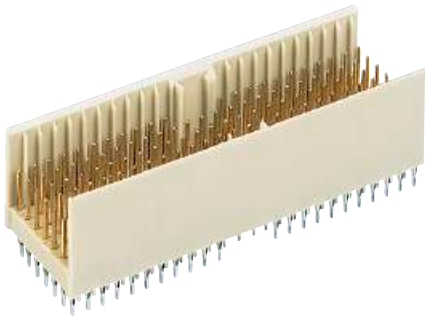

Male connectors, straight

Identification	No. of contacts	Contact length [mm] mating side	Contact length [mm] termination side	Part number	Contact configuration
Type AB25	125	8.2	3.7	17 15 125 1201 **17 15 125 2201**	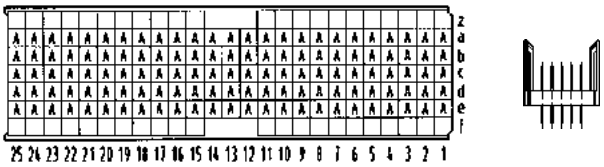
Type AB25	169	8.2/ 11.2	3.7	17 15 169 1201 **17 15 169 2201**	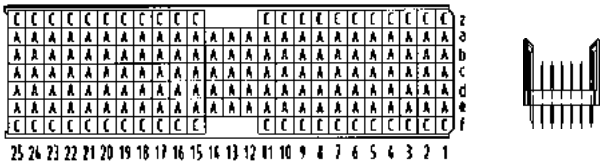
Type AB25	169	8.2/ 11.2	13.0/ 16.0	17 15 169 1003 **17 15 169 2003**	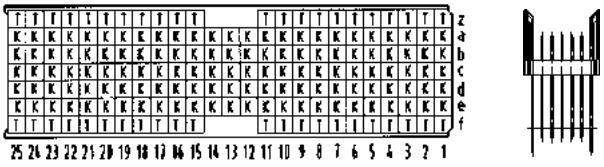

Contact dimensions [mm]

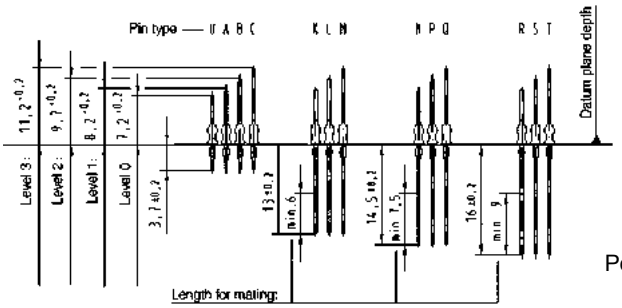

Connector dimensions [mm]

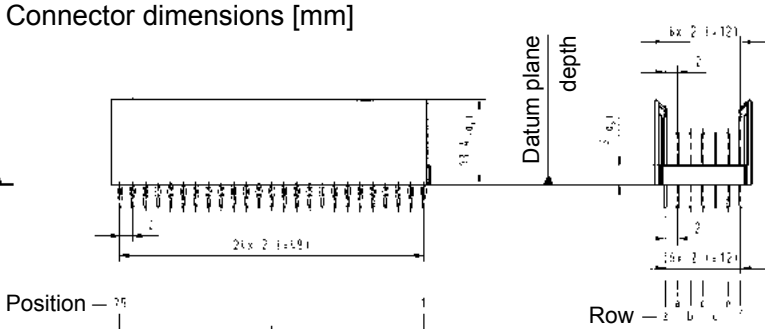

Board drillings

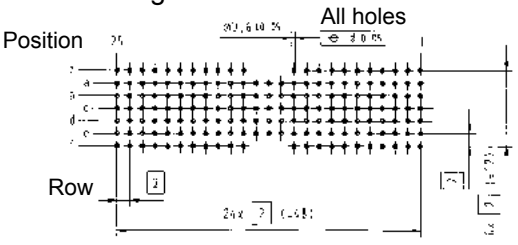

Thin print part numbers: performance level 1
Bold print part numbers: performance level 2

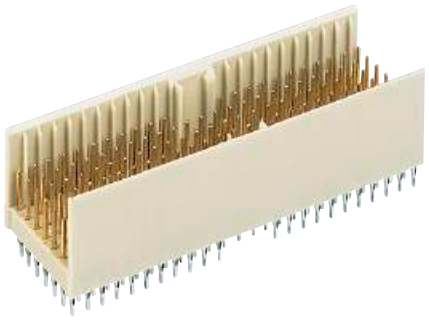

Male connectors, straight

Identification	No. of contacts	Contact length [mm] mating side	Contact length [mm] termination side	Part number	Contact configuration
Type AB22	110	8.2	3.7	17 14 110 1201 **17 14 110 2201**	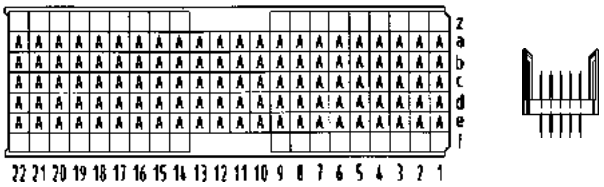
Type AB22	146	8.2/ 11.2	3.7	17 14 146 1201 **17 14 146 2201**	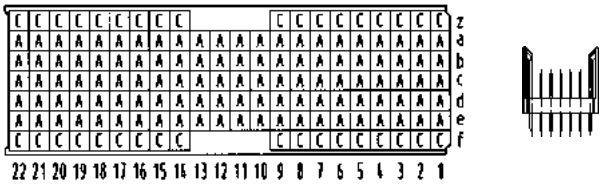
Type AB22	146	9.7/ 11.2	16.0	17 14 146 1601 **17 14 146 2601**	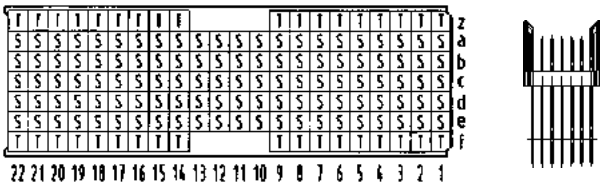

Contact dimensions [mm]

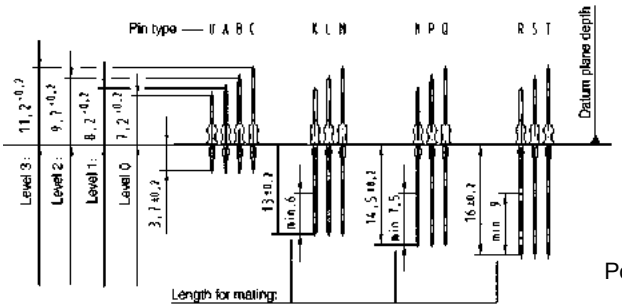

Connector dimensions [mm]

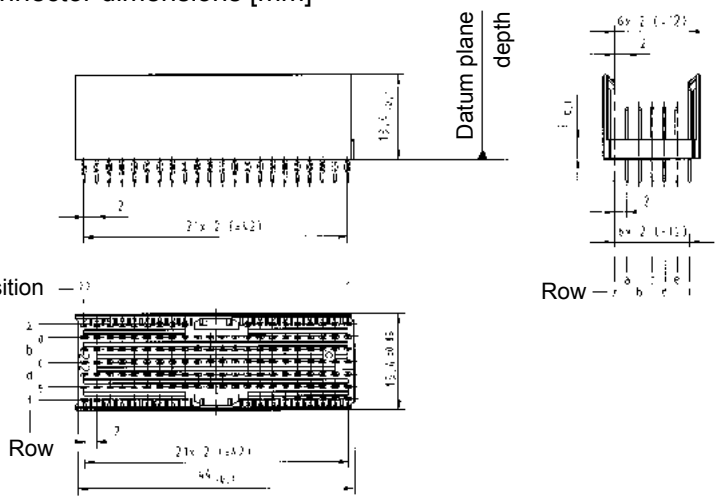

Board drillings

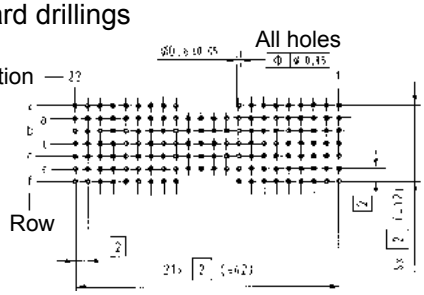

Thin print part numbers: performance level 1
Bold print part numbers: performance level 2

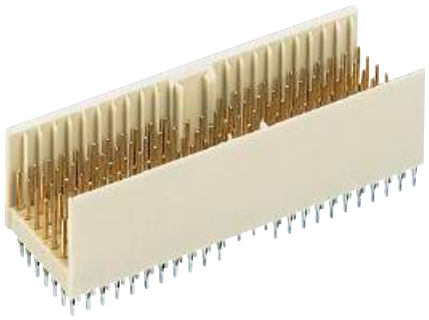

Male connectors, straight

Identification	No. of contacts	Contact length [mm] mating side	Contact length [mm] termination side	Part number	Contact configuration
Type AB19	95	8.2	3.7	17 13 095 1201 **17 13 095 2201**	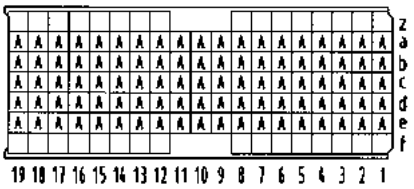
Type AB19	127	8.2/ 11.2	3.7	17 13 127 1201 **17 13 127 2201**	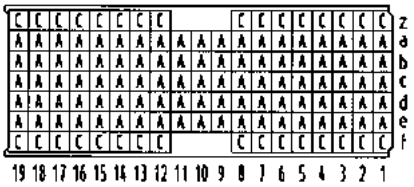
Type AB19	127	9.7/ 11.2	16.0	17 13 127 1601 **17 13 127 2601**	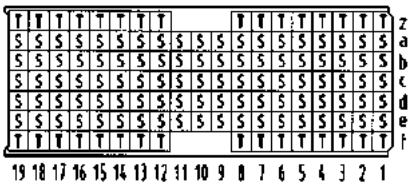 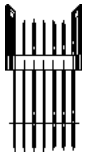

Contact dimensions [mm]

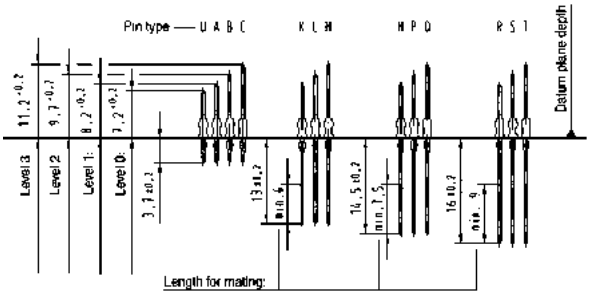

Connector dimensions [mm]

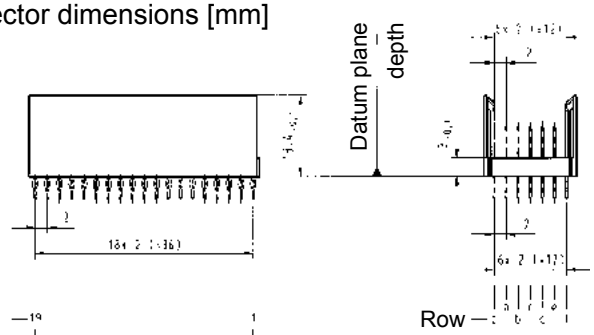

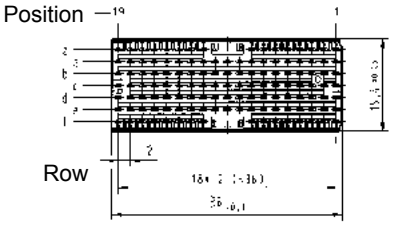

Board drillings

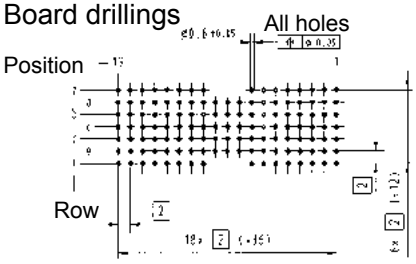

Thin print part numbers: performance level 1
Bold print part numbers: performance level 2

Male connectors, straight

Identification	No. of contacts	Contact length [mm] mating side	Contact length [mm] termination side	Part number	Contact configuration
Type C	55	8.2	3.7	17 03 055 1201 **17 03 055 2201**	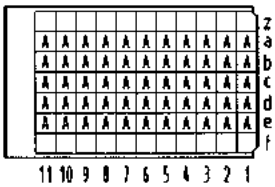
Type C	77	8.2/ 11.2	3.7	17 03 077 1201 **17 03 077 2201**	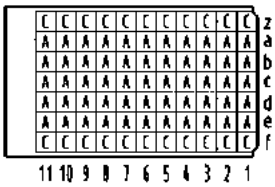
Type C	55	9.7	3.7	17 03 055 1202 **17 03 055 2202**	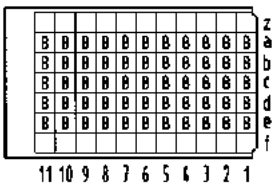
Type C	77	9.7/ 11.2	3.7	17 03 077 1202 **17 03 077 2202**	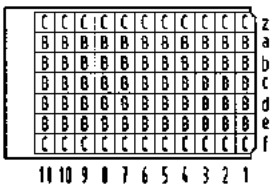
Type C	55	8.2	13.0	17 03 055 1401 **17 03 055 2401**	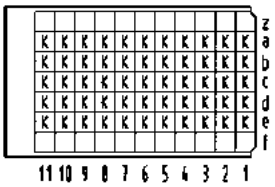 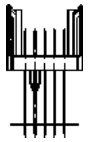
Type C	66	8.2/ 11.2	13.0/ 16.0	17 03 066 1001 **17 03 066 2001**	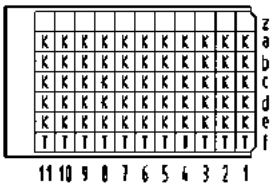 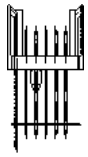

Thin print part numbers: performance level 1
Bold print part numbers: performance level 2
Connector dimensions see page 11.23

Male connectors, straight

Identification	No. of contacts	Contact length [mm] mating side	Contact length [mm] termination side	Part number	Contact configuration
Type C	77	8.2/ 11.2	3.7/ 13.0	17 03 077 1001 **17 03 077 2001**	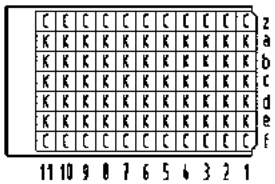
Type C	77	8.2/ 11.2	16.0	17 03 077 1601 **17 03 077 2601**	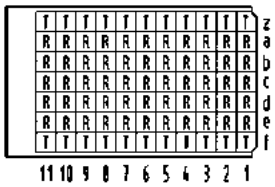

Contact dimensions [mm]

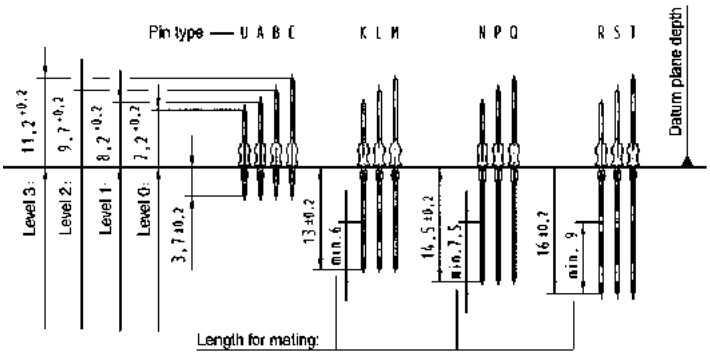

Connector dimensions [mm]

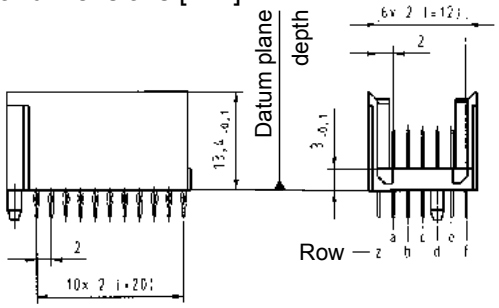

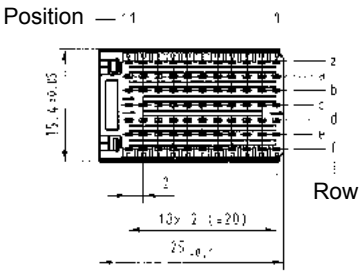

Board drillings

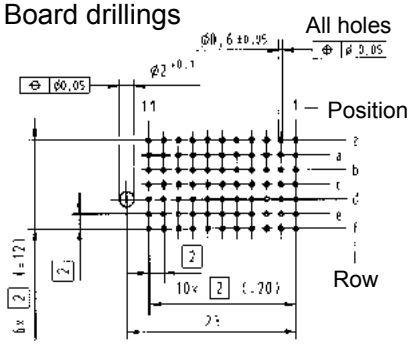

Thin print part numbers: performance level 1
Bold print part numbers: performance level 2

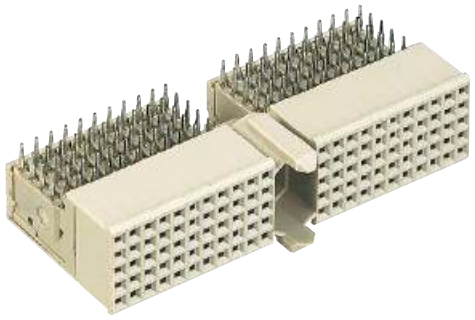

Female connectors, angled

Identification	No. of contacts	Contact length [mm] termination side	Part number
Type A	110	3.4	17 21 110 1101 **17 21 110 2101**
Type A with upper shield CompactPCI Positions J1, J4	110	3.4	17 21 110 1102 **17 21 110 2102**
Lower shield for type A connectors			17 21 000 4102
Type A with split upper shield CompactPCI computer telephony Position J4	90	3.4	17 21 090 1103 **17 21 090 2103**
Lower shield for type A connectors (rows 1 – 5) CompactPCI computer telephony			17 29 000 4102
Lower shield for type A connectors (rows 15 – 25) CompactPCI computer telephony			17 23 000 4102

Dimensions [mm]

Without shielding

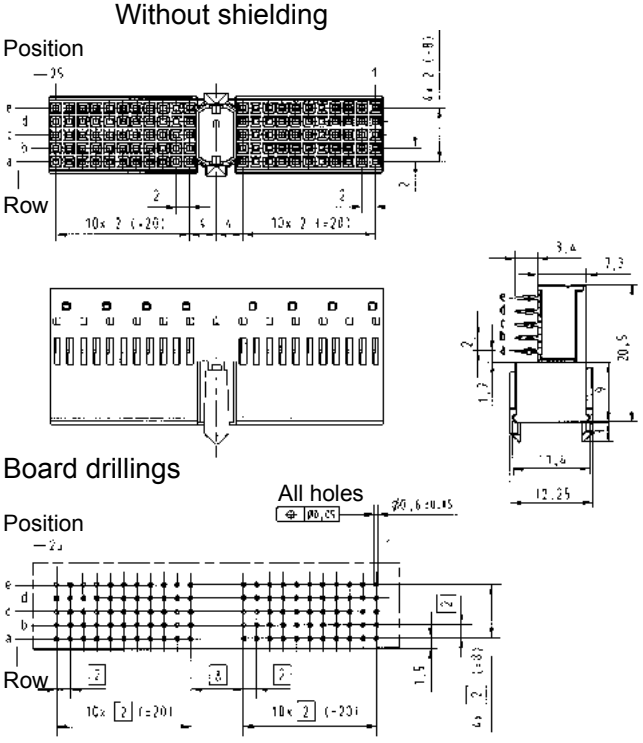

With shielding

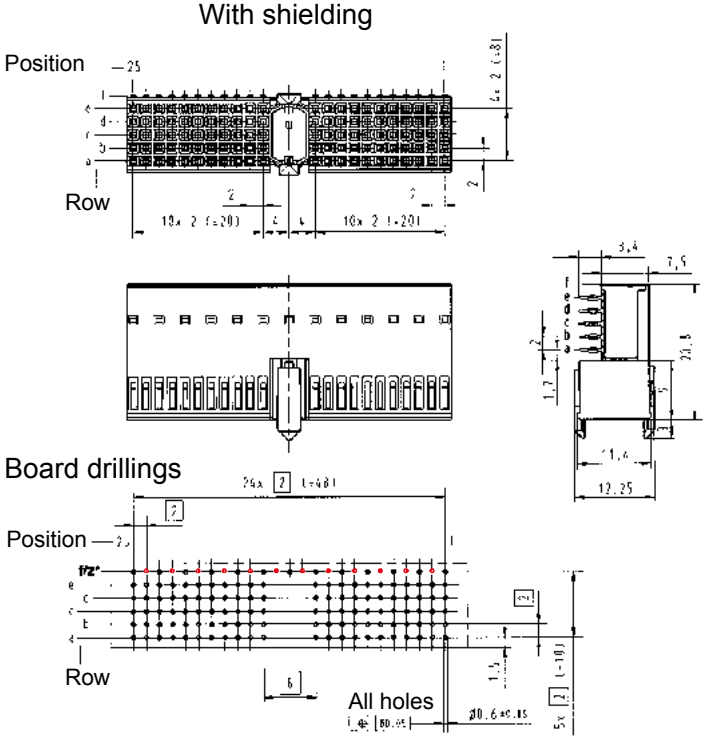

Thin print part numbers: performance level 1
Bold print part numbers: performance level 2

* hole on even contact numbers only needed for lower shielding

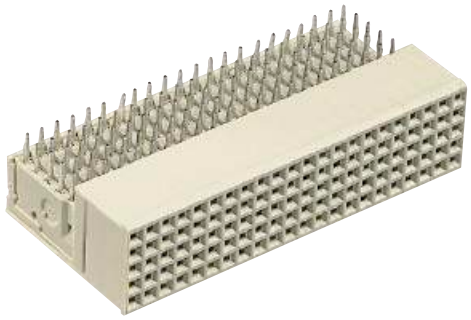

Female connectors, angled

Identification	No. of contacts	Contact length [mm] termination side	Part number
Type B_{19} VME, Position P0	95	3.4	17 25 095 1101 **17 25 095 2101**
Type B_{19} with upper shield CompactPCI, Position J3 – VME, Position P0	95	3.4	17 25 095 1102 **17 25 095 2102**
Lower shield for type B_{19} connectors			17 25 000 4102
Type B_{22}	110	3.4	17 24 110 1101 **17 24 110 2101**
Type B_{22} with upper shield CompactPCI, Positions J2, J5	110	3.4	17 24 110 1102 **17 24 110 2102**
Lower shield for type B_{22} connectors			17 24 000 4102
Type B_{25}	125	3.4	17 22 125 1101 **17 22 125 2101**
Type B_{25} with upper shield	125	3.4	17 22 125 1102 **17 22 125 2102**
Lower shield for type B_{25} connectors			17 22 000 4102

Dimensions [mm]

Contact positions	x_1	x_2
19	37.9	18 x 2 (= 36)
22	43.9	21 x 2 (= 42)
25	49.9	24 x 2 (= 48)

Without shielding

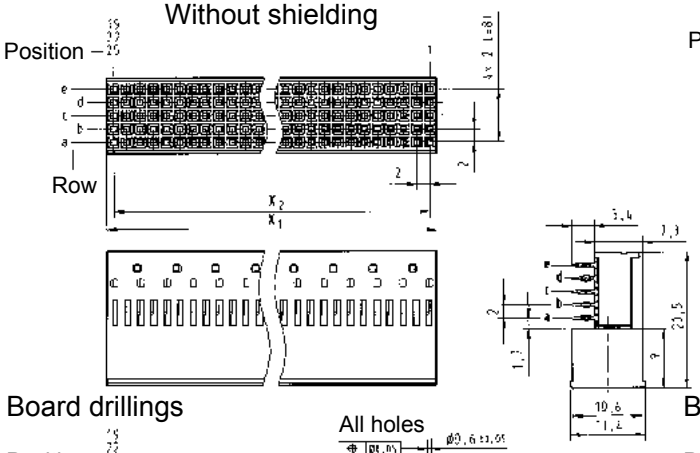

Board drillings

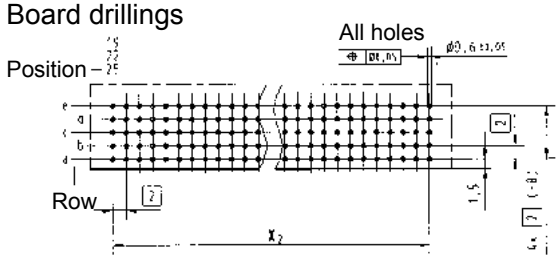

With shielding

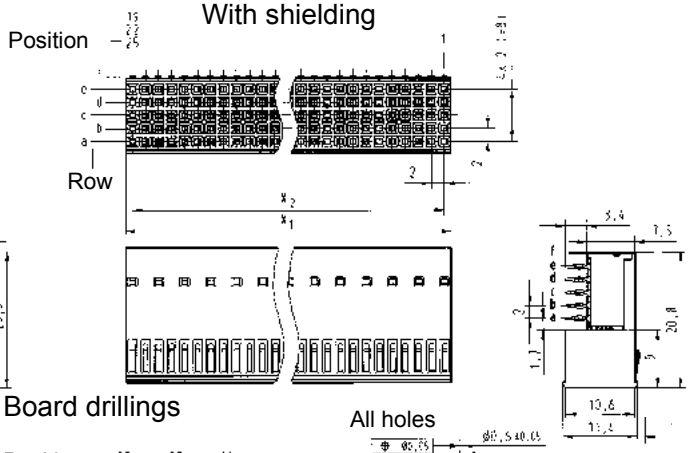

Board drillings

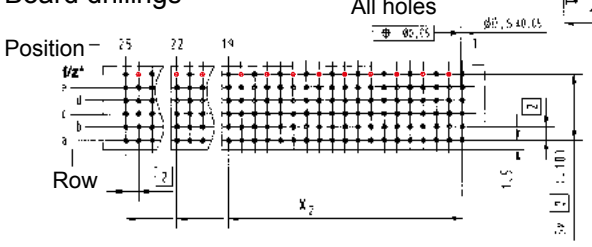

Thin print part numbers: performance level 1
Bold print part numbers: performance level 2

* hole on even contact numbers only needed for lower shielding

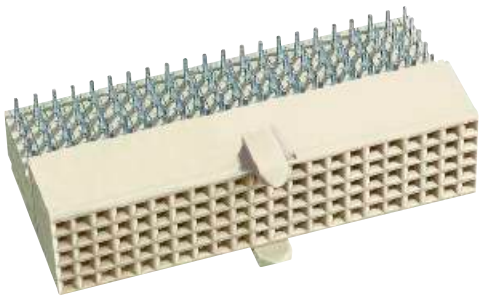

Female connectors, angled

Identification	No. of contacts	Contact length [mm] termination side	Part number
Type AB_{19}	95	3.4	17 33 095 1101 **17 33 095 2101**
Type AB_{19} with upper shield CompactPCI, Position RJ3	95	3.4	17 33 095 1102 **17 33 095 2102**
Lower shield for type AB_{19} connectors			17 33 000 4102
Type AB_{22}	110	3.4	17 34 110 1101 **17 34 110 2101**
Type AB_{22} with upper shield CompactPCI, Positions RJ2, RJ5	110	3.4	17 34 110 1102 **17 34 110 2102**
Lower shield for type AB_{22} connectors			17 34 000 4102
Type AB_{25}	125	3.4	17 35 125 1101 **17 35 125 2101**
Type AB_{25} with upper shield	125	3.4	17 35 125 1102 **17 35 125 2102**
Lower shield for type AB_{25} connectors			17 21 000 4102

Dimensions [mm]

Contact positions	x_1	x_2
19	37.9	18 x 2 (= 36)
22	43.9	21 x 2 (= 42)
25	49.9	24 x 2 (= 48)

Without shielding

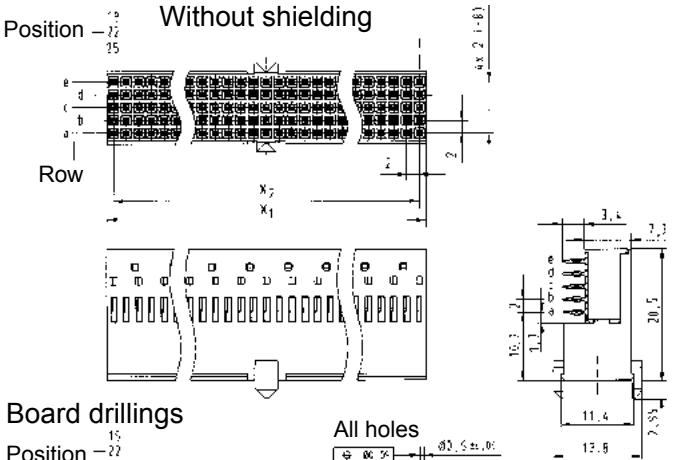

With shielding

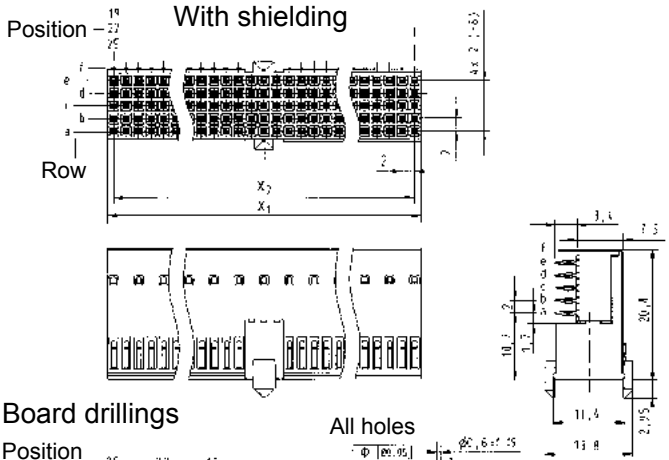

Board drillings

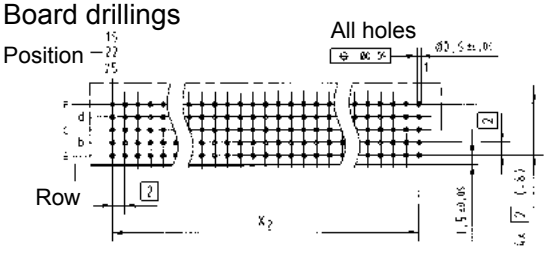

Board drillings

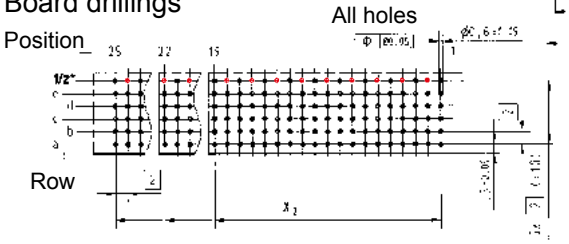

Thin print part numbers: performance level 1
Bold print part numbers: performance level 2

* hole on even contact numbers only needed for lower shielding

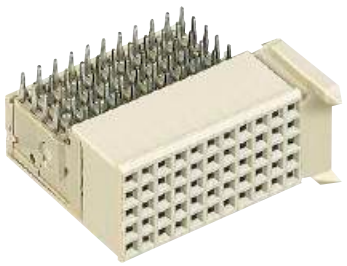

Female connectors, angled

Identification	No. of contacts	Contact length [mm] termination side	Part number
Type C	55	3.4	17 23 055 1101 **17 23 055 2101**
Type C with upper shield	55	3.4	17 23 055 1102 **17 23 055 2102**
Lower shield for type C connectors			17 23 000 4102

Without shielding

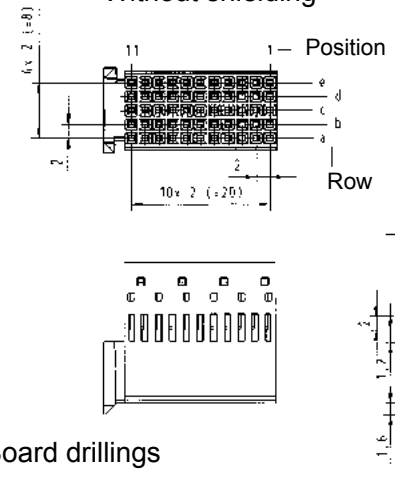

With shielding

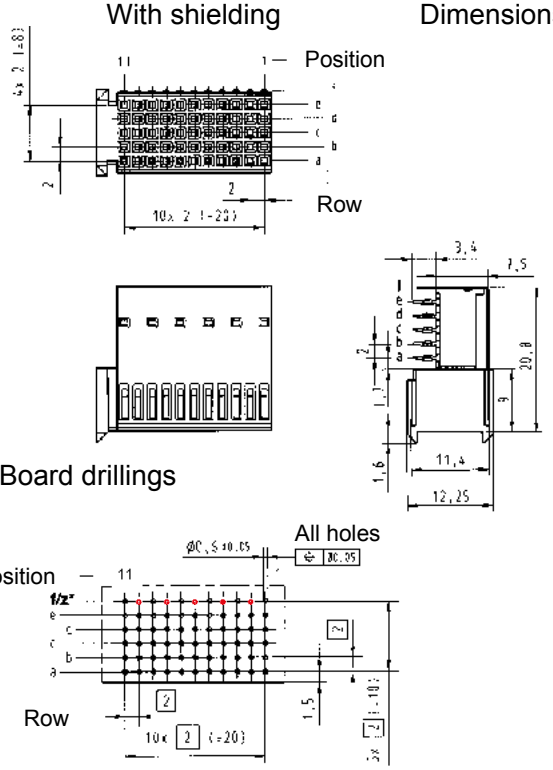

Dimensions [mm]

Thin print part numbers: performance level 1
Bold print part numbers: performance level 2

* hole on even contact numbers only needed for lower shielding

Male connectors, straight

Identification	No. of contacts	Contact length [mm] mating side	Contact length [mm] termination side	Part number	Contact configuration
Type Monoblock 47	220	8.2	3.7	17 06 220 1201 **17 06 220 2201**	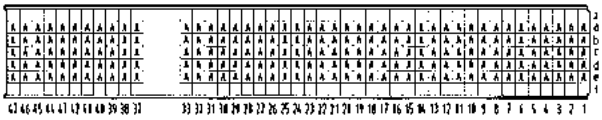
Type Monoblock 47	308	8.2/ 11.2	3.7	17 06 308 1201 **17 06 308 2201**	
Type Monoblock 47	220	9.7	3.7	17 06 220 1202 **17 06 220 2202**	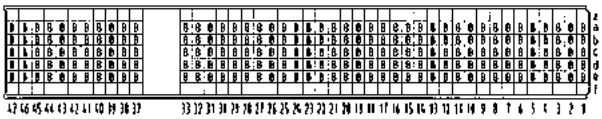
Type Monoblock 47 CompactPCI Positions P1 and P2	308	8.2/ 9.7/ 11.2	3.7	17 06 308 1202 **17 06 308 2202**	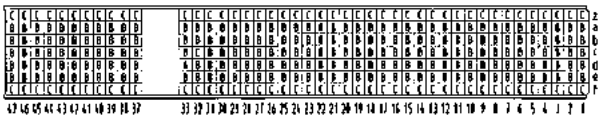
Type Monoblock 47 CompactPCI hot swap	308	8.2/ 9.7/ 11.2	3.7	17 06 308 1203 **17 06 308 2203**	
Type Monoblock 47 CompactPCI computer telephony	232	8.2/ 9.7/ 11.2	3.7	17 06 232 1201 **17 06 232 2201**	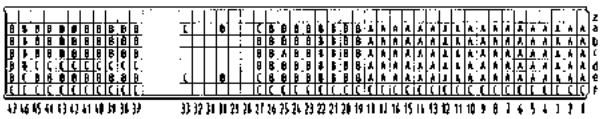

Thin print part numbers: performance level 1
Bold print part numbers: performance level 2
Connector dimensions see page 11.29

Male connectors, straight

Identification	No. of contacts	Contact length [mm] mating side	Contact length [mm] termination side	Part number	Contact configuration
Type Monoblock 47 CompactPCI I/O	308	8.2/ 9.7/ 11.2	3.7/ 16.0	17 06 308 1001 **17 06 308 2001**	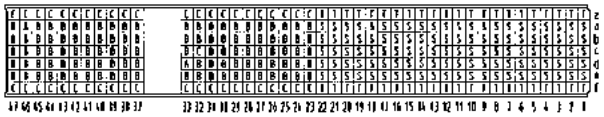
Type Monoblock 47 CompactPCI AB friendly Positions P4 and P5	308	9.7/ 11.2	3.7/ 16.0	17 06 308 1005 **17 06 308 2005**	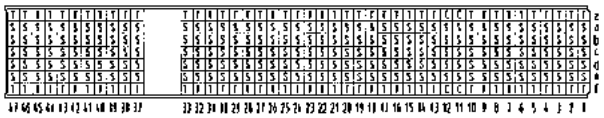

Contact dimensions [mm]

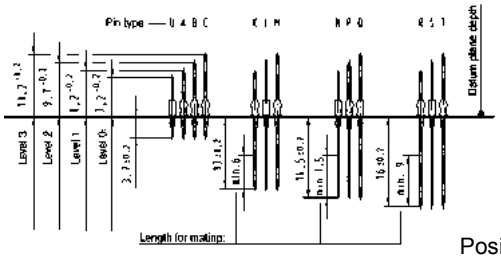

Connector dimensions [mm]

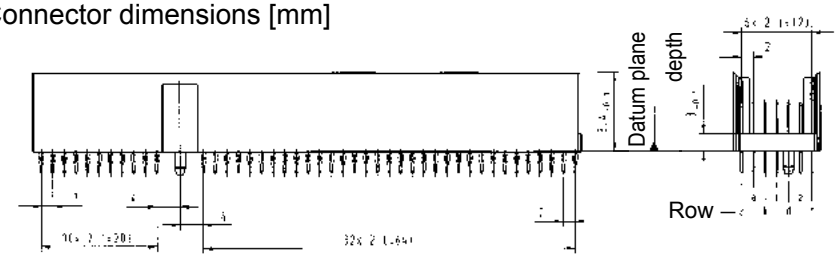

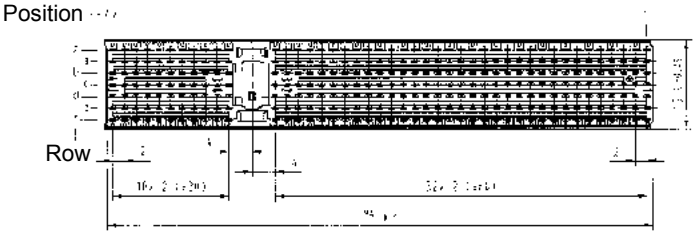

Board drillings

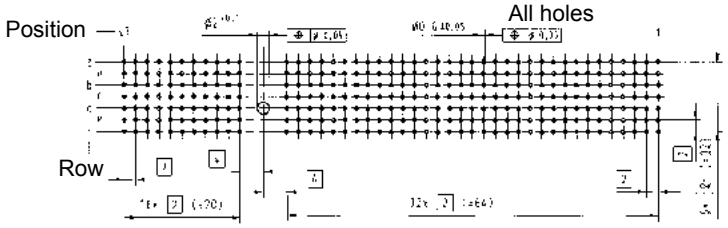

Thin print part numbers: performance level 1
Bold print part numbers: performance level 2

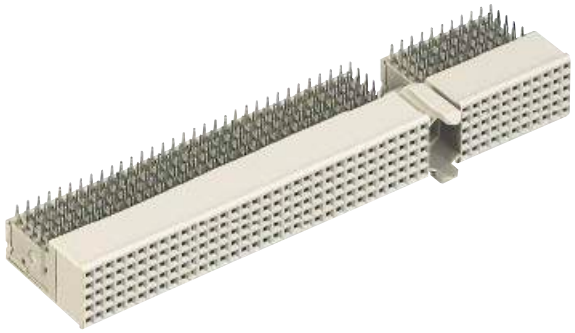

Female connectors, angled

Identification	No. of contacts	Contact length [mm] termination side	Part number
Type Monoblock 47	220	3.4	17 26 220 1101 **17 26 220 2101**
Type Monoblock 47 with upper shield	220	3.4	17 26 220 1102 **17 26 220 2102**
Type Monoblock 47 with upper shield CompactPCI computer telephony	200	3.4	17 26 200 1103 **17 26 200 2103**
Lower shield for type Monoblock 47 connectors			17 26 000 4102
Lower shield for type Monoblock 47 connectors (rows 1 – 22) CompactPCI computer telephony			17 24 000 4102
Lower shield for type Monoblock 47 connectors (rows 23 – 27) CompactPCI computer telephony			17 29 000 4102
Lower shield for type Monoblock 47 connectors (rows 37 – 47) CompactPCI computer telephony			17 23 000 4102

Without shielding

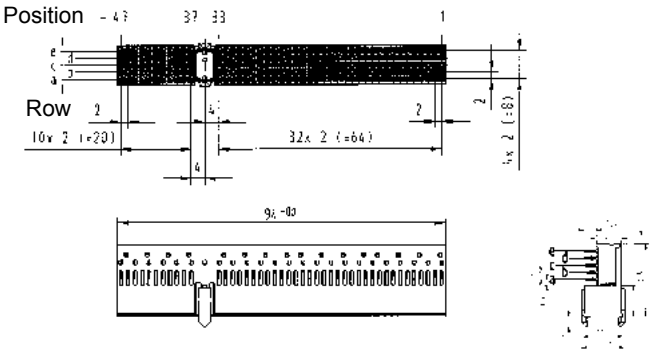

With shielding

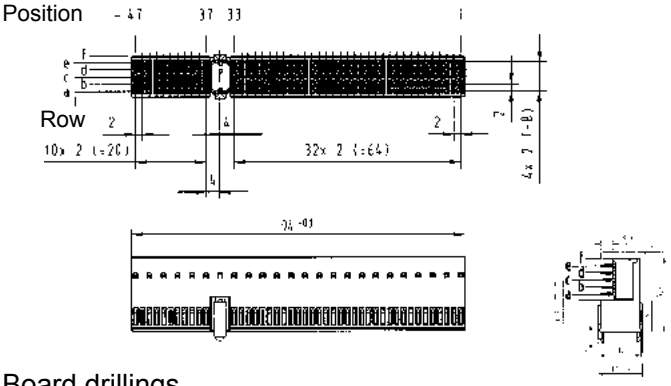

Board drillings

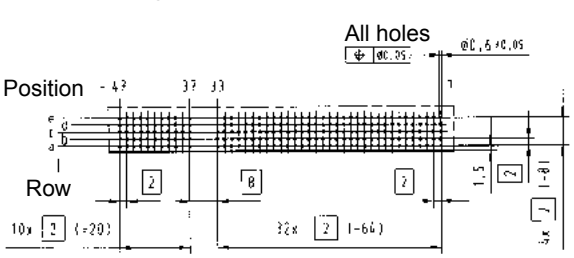

Board drillings

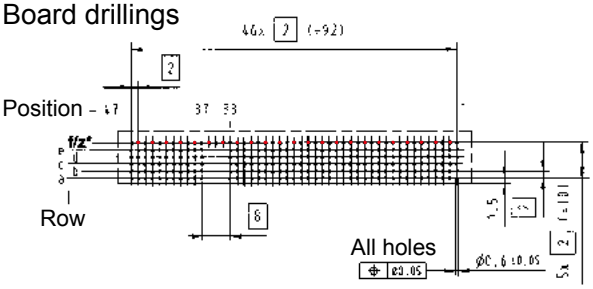

Dimensions [mm]

Thin print part numbers: performance level 1
Bold print part numbers: performance level 2

* hole on even contact numbers only needed for lower shielding

Notes

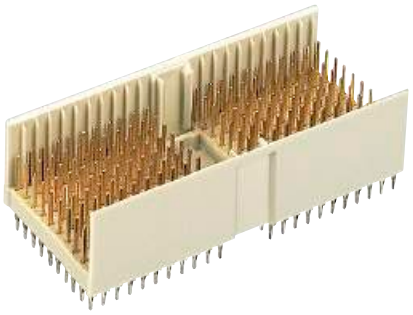

Male connectors, straight

Identification	No. of contacts	Contact length [mm] mating side	Contact length [mm] termination side	Part number	Contact configuration
Type D	176	8.2	3.7	17 11 176 1201 **17 11 176 2201**	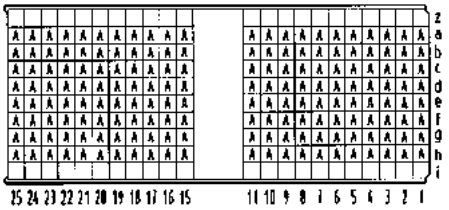 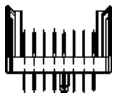
Type D	220	8.2/ 11.2	3.7	17 11 220 1201 **17 11 220 2201**	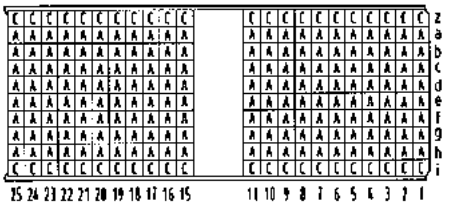
Type D	220	9.7/ 11.2	14.5/ 16.0	17 11 220 1001 **17 11 220 2001**	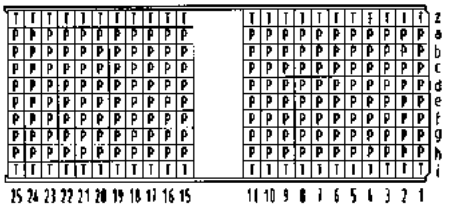

Contact dimensions [mm]

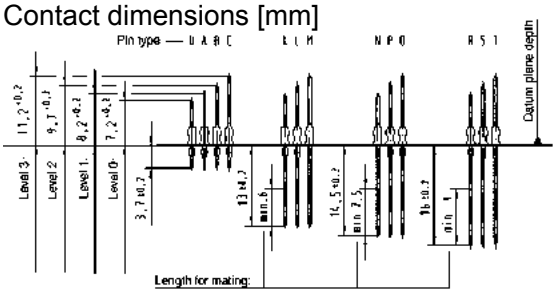

Connector dimensions [mm]

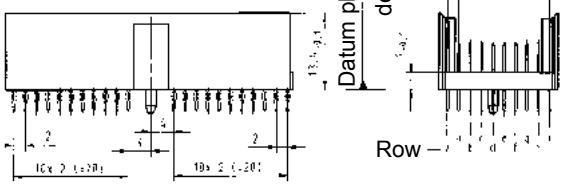

Position

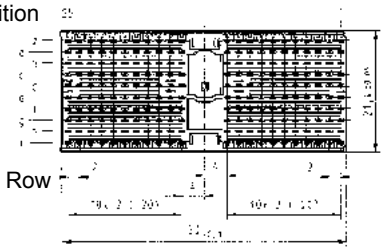

Board drillings

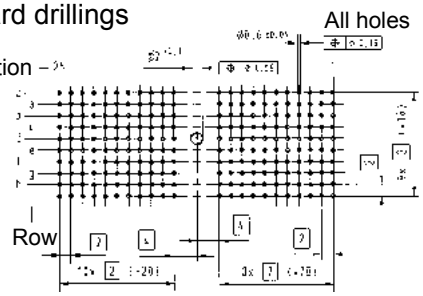

Thin print part numbers: performance level 1
Bold print part numbers: performance level 2

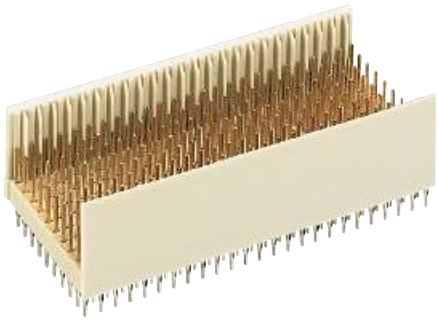

Male connectors, straight

Identification	No. of contacts	Contact length [mm] mating side	Contact length [mm] termination side	Part number	Contact configuration
Type E	200	8.2	3.7	17 12 200 1201 **17 12 200 2201**	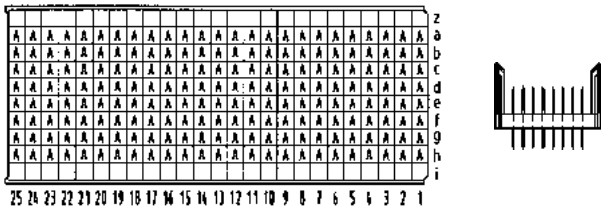
Type E	250	8.2/ 11.2	3.7	17 12 250 1201 **17 12 250 2201**	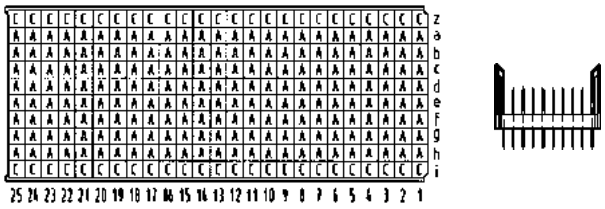
Type E	250	9.7/ 11.2	14.5/ 16.0	17 12 250 1001 **17 12 250 2001**	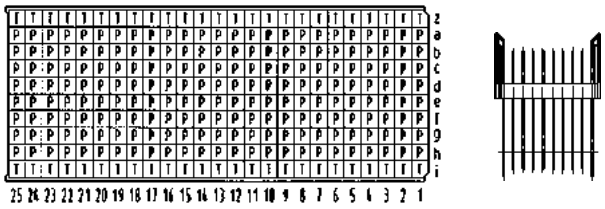

Contact dimensions [mm]

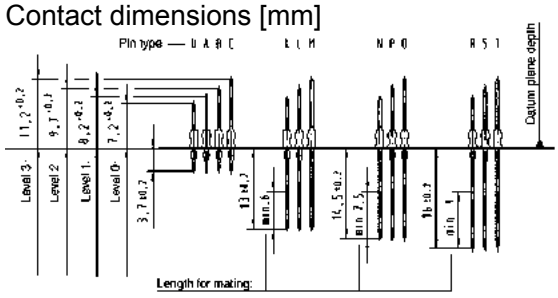

Connector dimensions [mm]

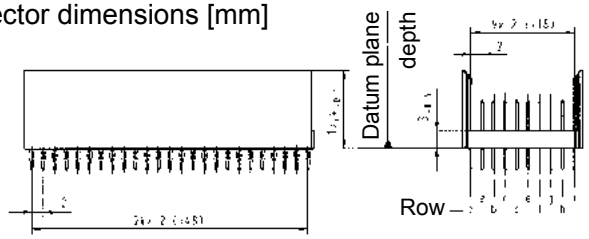

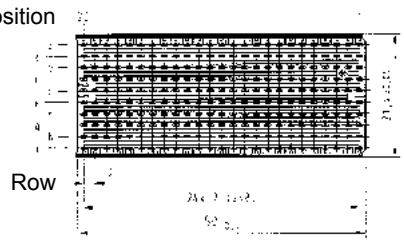

Board drillings

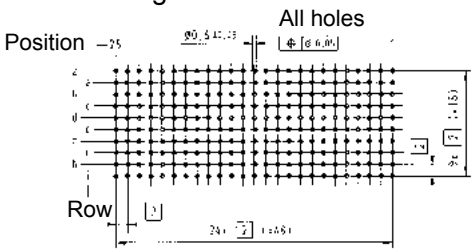

Thin print part numbers: performance level 1
Bold print part numbers: performance level 2

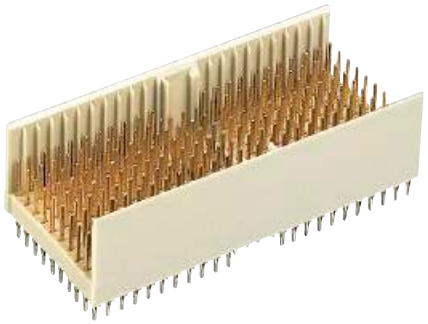

Male connectors, straight

Identification	No. of contacts	Contact length [mm] mating side	Contact length [mm] termination side	Part number	Contact configuration
Type DE	200	8.2	3.7	17 10 200 1201 **17 10 200 2201**	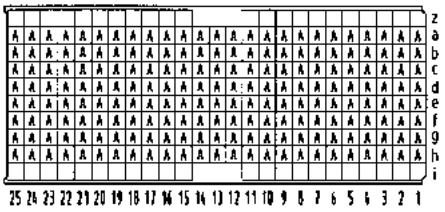 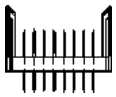
Type DE	244	8.2/ 11.2	3.7	17 10 244 1201 **17 10 244 2201**	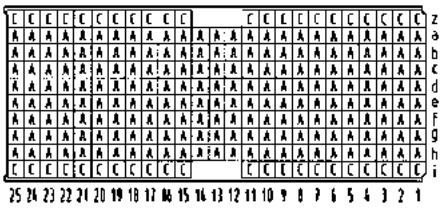 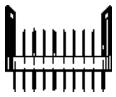
Type DE	244	9.7/ 11.2	14.5/ 16.0	17 10 244 1001 **17 10 244 2001**	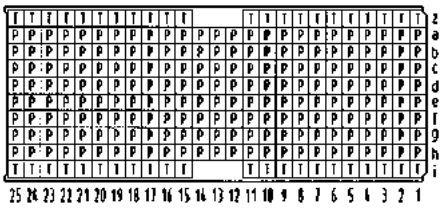

Contact dimensions [mm]

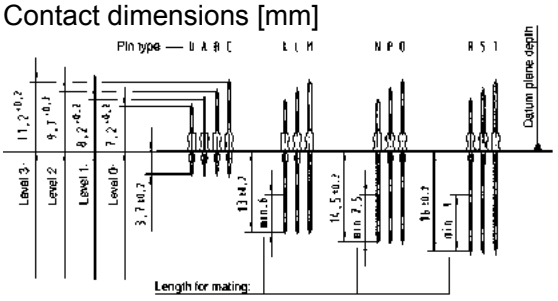

Connector dimensions [mm]

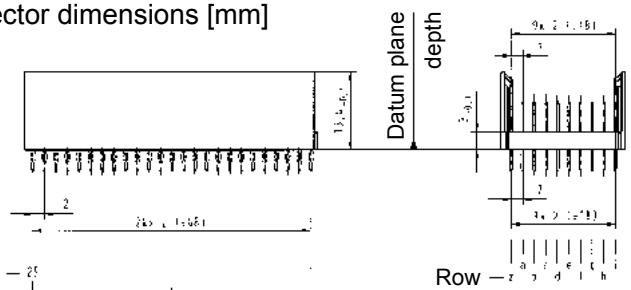

Board drillings

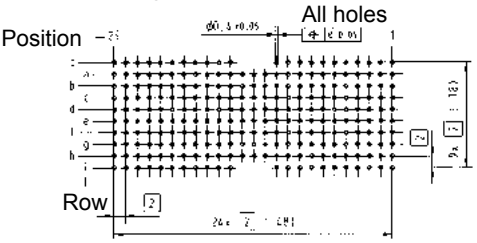

Thin print part numbers: performance level 1
Bold print part numbers: performance level 2

Notes

The har-bus® HM Power connector is designed according to the OBSAI Specification V 1.1. It is well-suited to be used in conjunction with 2 mm har-bus® HM connectors. The durability is according to IEC 61076-4-101 (250 mating cycles).

The straight female connector for the backplane is fitted with press-in contacts, the right angled male connector for daugther cards can be supplied with either, press-in or PIHIR (Pin In Hole Intrusive Reflow) termination.

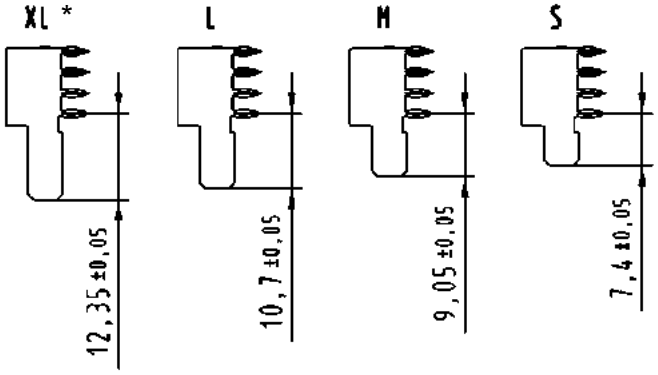

The compact, high temperature moulding can be loaded with up to four high current contacts. Four different contact lengths are available from 7.4 mm to 12.35 mm. This makes sequenced and non-sequenced loadings possible (e.g. with GND and ENA). Any other contact assignments, also partially loaded, are available on request.

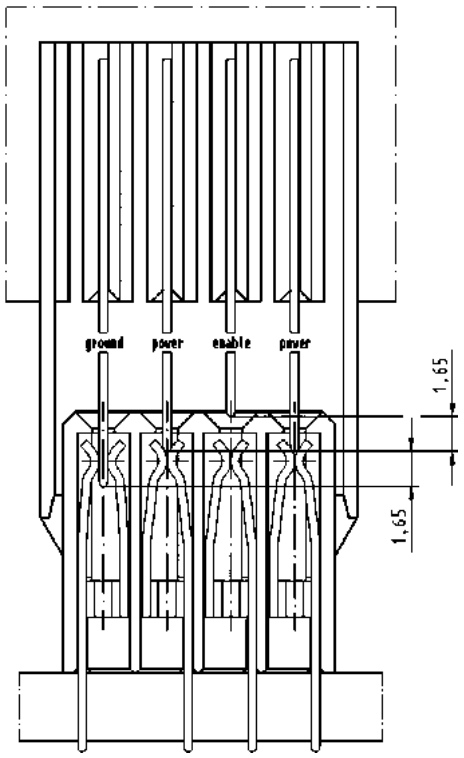

Loaded with four power contacts, each contact can carry up to 20 A @ 70 °C / 80 % derating.

With a configuration of two power contacts, GND and ENA, the current carrying capacity is even up to 23 A @ 70 °C / 80 % derating per contact.

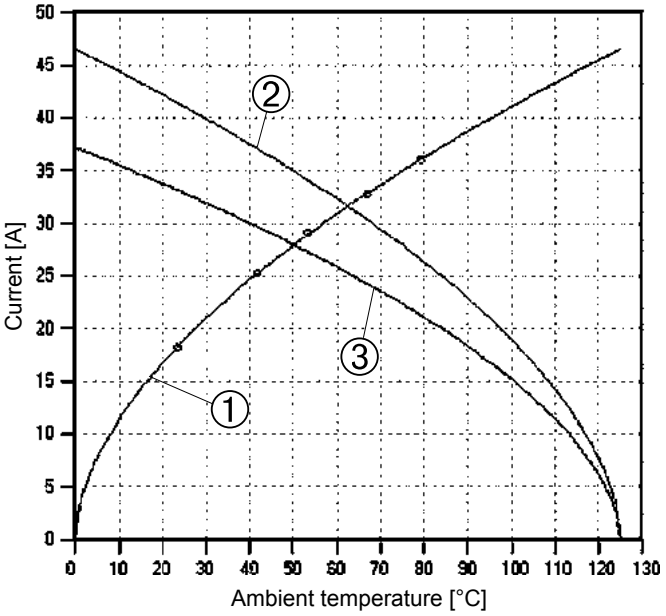

① Temperature raise
② Derating
③ Derating curve at I_{max} x 0.8 (DIN EN 60512-5-2)

The distance between adjacent contacts is 3 mm, which enables wider pcb traces, larger solder paste areas and an improved heat dissipation. For the female backplane connector no special tooling is necessary due to the flatrock design. For the male connector HARTING offers a special press-in tool (see chapter 20).

HARTING's har-bus® HM Signal and Power connectors meet OBSAI (Open Base Station Architecture Initiative) specifications and provide a reliable and cost effective solution for connecting plug-in units to the backplane. The connector solutions available from the HARTING technology group will offer full compatibility and intermateability with base station modules.

Benefits:

- Small form factor
- High current rating up to 23 A per contact (OBSAI configuration)
- 3 level staggering (or even 4)
- Flatrock design
- Matched with har-bus® HM 2 mm connectors

* Type XL on request

Design according	:	OBSAI System Spezifikation V 1.1
Approvals Underwriters Laboratories Inc.®	:	c UL us with their respective ratings documented in file E 102079
Number of contacts	:	up to 4
Contact spacing	:	3.00 mm
Clearance and creepage distances between contacts	:	> 2.3 mm
Working current	:	23 A max. (OBSAI configuration) 20 A max. (fully loaded with power contacts)
Test voltage $U_{r.m.s.}$	:	AC 1500 V min.
Contact resistance	:	< 1 mΩ
Insulation resistance:	:	> 10 GΩ
Temperature range during reflow soldering	:	- 55 °C ... + 125 °C 220 °C for 2 minutes, 260 °C max. short-term
Durability as per IEC 61076-4-101	:	*Performance level 2 = 250 mating cycles in total.* First 125 mating cycles, then 4 days gas test using 0.5 ppm SO_2 and 0.1 ppm H_2S (at 25 + 2 °C and 75 + 3 % humidity). Measurement of contact resistance. The remaining 125 mating cycles are subject to measurement of contact resistance and visual inspection. No abrasion of the contact finish through to the base material. No functional impairment.
Termination technique		
Male connectors	:	Press-in or solder termination, suitable for (lead-free) pin-in-hole reflow soldering
Female connectors	:	Press-in termination
Mating force	:	max. 4 N / contact
Withdrawal force	:	min. 0.5 N / contact
Materials		
Mouldings	:	Thermoplastic resin, glass-fibre filled, UL 94-V0
Contacts	:	Copper alloy
Contact surface	:	Selectively gold plated (contact zone)
Contact styles	:	Standard, leading, lagging
Packaging		
Tube	:	Male and female connectors
Tape & Reel	:	On request for male solder connectors

Male connectors angled, with press-in termination

Identification	No. of contacts	Contact length [mm] termination side	Part number	Contact loading
Connector with same sized contacts	4	2.8	17 61 004 2102	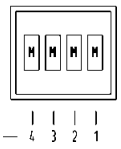
Connector with same sized contacts	4	2.8	17 61 004 2103	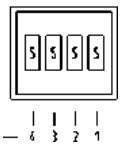
Connector with leading/lagging contacts OBSAI configuration	4	2.8	17 61 004 2101	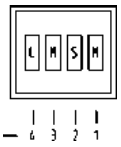
Connector with leading contact	4	2.8	17 61 004 2104	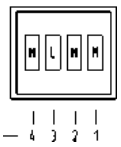

Contact dimensions [mm]

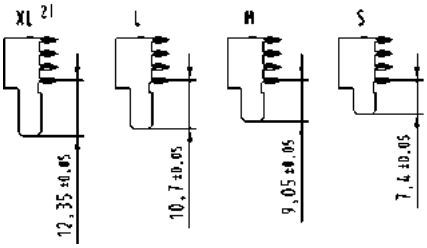

Connector dimensions [mm]

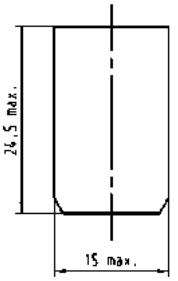

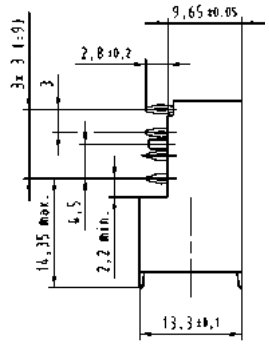

(View magnified)

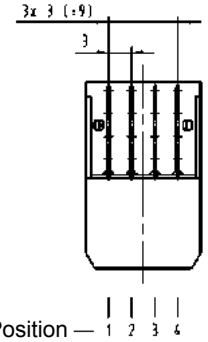

Board drillings

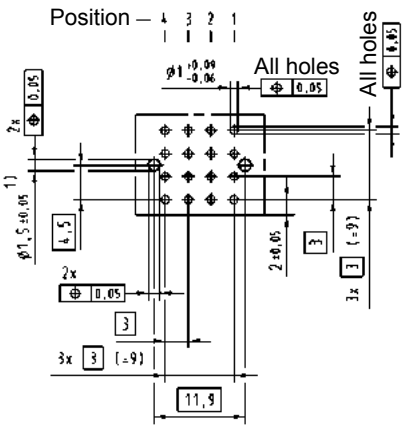

1) Non-metallized drillings
2) Type XL on request
Tooling see chapter 20

Male connectors angled, with solder (SMC) termination

Identification	No. of contacts	Contact length [mm] termination side	Part number	Contact loading
Connector with same sized contacts	4	2.5	17 61 004 2802	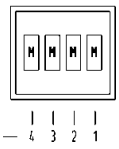
Connector with leading/lagging contacts OBSAI configuration	4	2.5	17 61 004 2801	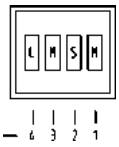

Contact dimensions [mm]

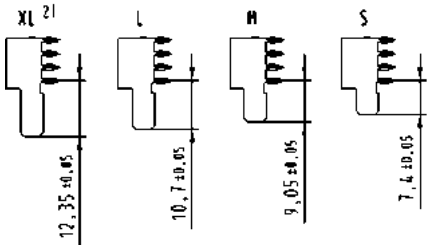

Connector dimensions [mm]

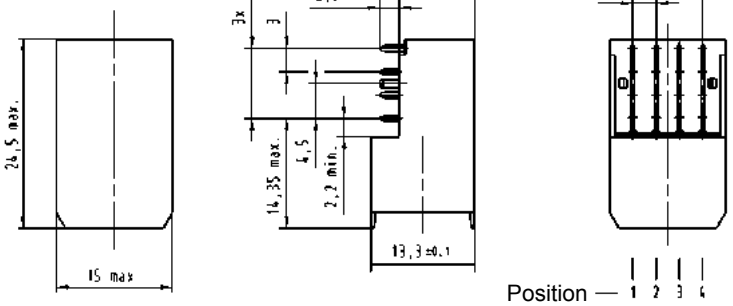

(View magnified)

Board drillings

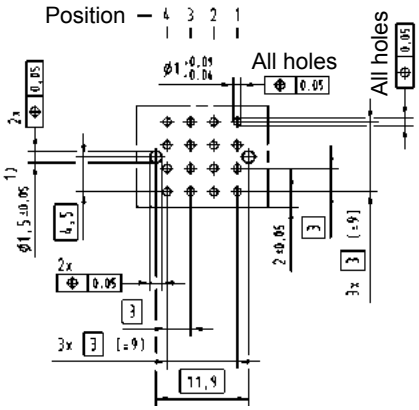

[1] Non-metallized drillings
[2] Type XL on request

Female connector straight, with press-in termination

Identification	No. of contacts	Contact length [mm] termination side	Part number
Connector with same sized contacts	4	3.7	17 66 004 2201

Connector dimensions [mm]

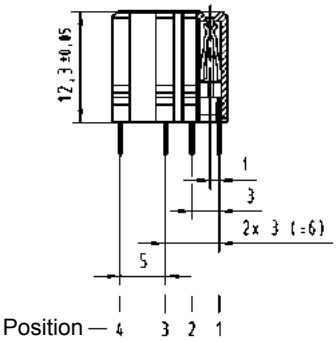

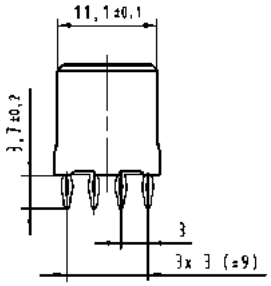

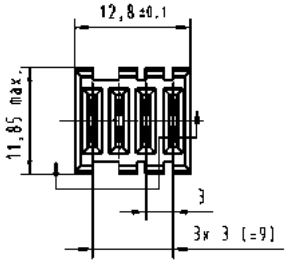

Board drillings

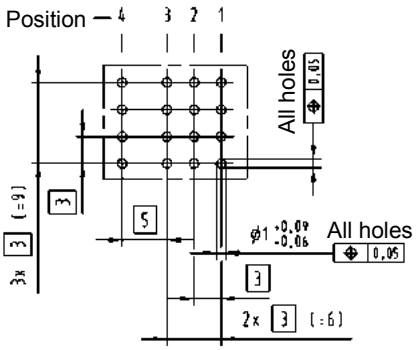

Coding keys

Coding keys are used to prevent mismating of boards. They can be inserted into the multifunctional area of male and female connectors with special tooling. This can be easily done after the connectors have been pressed in.

Coding keys have different bright and pre-defined RAL colours to simplify the identification. In the table below the colours and code numbers in acc. with the IEC 61076-4-101 are listed. They are used for the following applications:

- Cadmium yellow for CompactPCI to identify 3.3 V bus signalling
- Brilliant blue for CompactPCI to identify 5.0 V bus signalling
- Reseda green to prevent accidental board insertion in VME64x on CompactPCI applications
- Strawberry red to prevent accidental board insertion in telephony applications
- Pastel orange for user defined bus
- Nut brown for rear I/O and user I/O

Coding keys for male connectors

Coding key	Code number	Colour	Part number
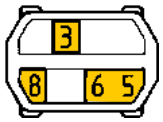	3568	Pastel orange RAL 2003	17 79 000 0010
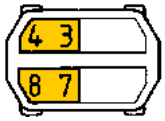	3478	Steel blue RAL 5011	17 79 000 0011
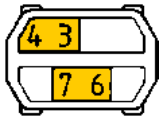	3467	Slate grey RAL 7015	17 79 000 0012
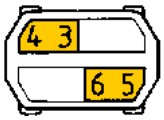	3456	Cadmium yellow RAL 1021 for CPCI, 3.3 V	17 79 000 0013
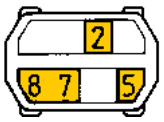	2578	Reseda green Ral 6011	17 79 000 0014
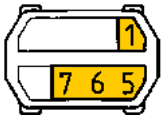	1567	Brilliant blue RAL 5007 for CPCI, 5.0 V	17 79 000 0015
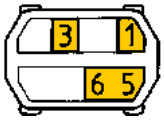	1356	Blue lilac RAL 4005	17 79 000 0016
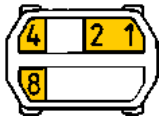	1248	Strawberry red RAL 3018	17 79 000 0018
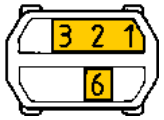	1236	Nut brown RAL 8011	17 79 000 0019

Coding keys for female connectors

Coding key	Code number	Colour	Part number
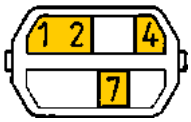	1247	Pastel orange RAL 2003	17 79 000 0020
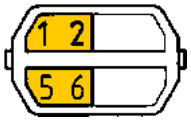	1256	Steel blue RAL 5011	17 79 000 0021
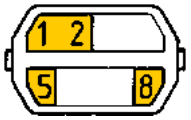	1258	Slate grey RAL 7015	17 79 000 0022
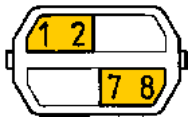	1278	Cadmium yellow RAL 1021 for CPCI, 3.3 V	17 79 000 0023
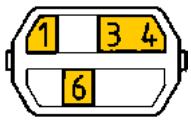	1346	Reseda green Ral 6011	17 79 000 0024
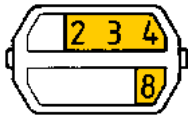	2348	Brilliant blue RAL 5007 for CPCI, 5.0 V	17 79 000 0025
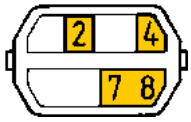	2478	Blue lilac RAL 4005	17 79 000 0026
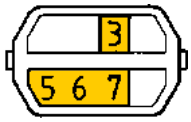	3567	Strawberry red RAL 3018	17 79 000 0028
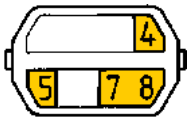	4578	Nut brown RAL 8011	17 79 000 0029

All codings are in acc. with the IEC 61076-4-101 specification

HARTING's har-bus® HM shrouds protect the pins protruding the rear side of the backplane from irregular mating tolerances, thus ensuring a quality connection.

To accommodate pcb thickness, from 1.6 up to 4 mm nominal, the shrouds have integrated standoffs of corresponding height.

Thus forming a one piece solution that reduces assembling cost significantly.

The shroud can be mounted without the additional requirement of spacers to ensure the desired pin lengths on the rear side of the pcb.

Fixing of the component is carried out on the rear post via a smooth friction fit process.

For ease of assembly the same tooling as for the press-in connectors on the front side is utilised for assembly.

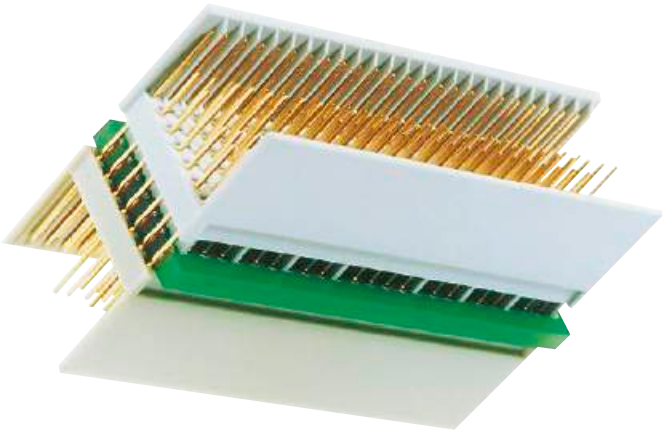

Identification	Board thickness [mm]	Part number
Type A shroud 25 positions	1.6 ± 0.4 2.4 ± 0.4 3.2 ± 0.4 4.0 ± 0.4	17 70 000 1001 17 70 000 1002 17 70 000 1003 17 70 000 1004

Dimensions

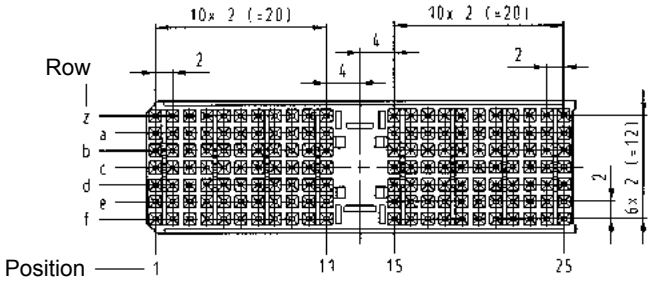

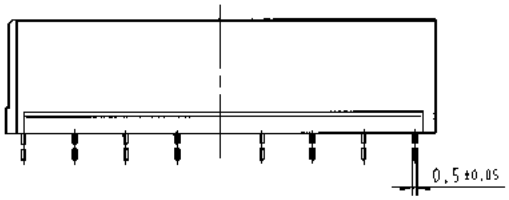

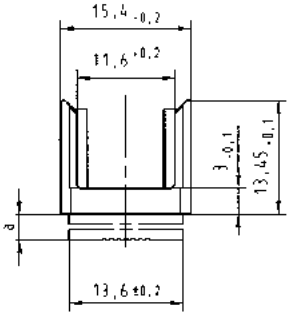

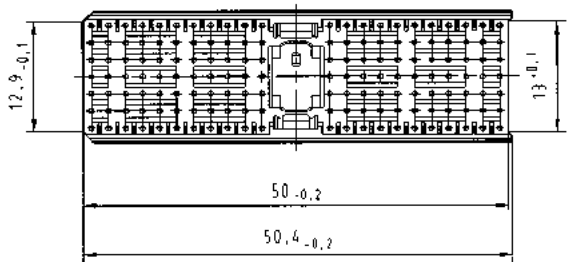

Board thickness [mm]	a [mm]
1.6 ± 0.4	3.1 ± 0.05
2.4 ± 0.4	2.3 ± 0.05
3.2 ± 0.4	1.5 ± 0.05
4.0 ± 0.4	0.7 ± 0.05

Dimensions [mm]

Shrouds type B

Identification	Board thickness [mm]	Part number
Type B shroud 25 positions	1.6 ± 0.4 2.4 ± 0.4 3.2 ± 0.4 4.0 ± 0.4	17 70 000 2001 17 70 000 2002 17 70 000 2003 17 70 000 2004
22 positions	1.6 ± 0.4 2.4 ± 0.4 3.2 ± 0.4 4.0 ± 0.4	17 70 000 4001 17 70 000 4002 17 70 000 4003 17 70 000 4004
19 positions	1.6 ± 0.4 2.4 ± 0.4 3.2 ± 0.4 4.0 ± 0.4	17 70 000 5001 17 70 000 5002 17 70 000 5003 17 70 000 5004

Dimensions

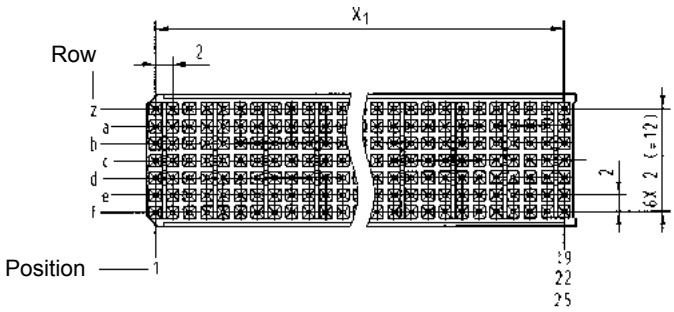

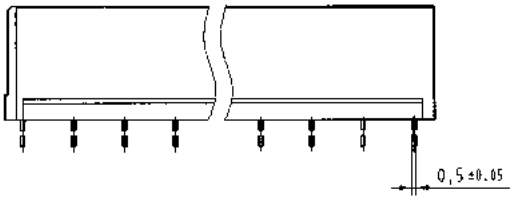

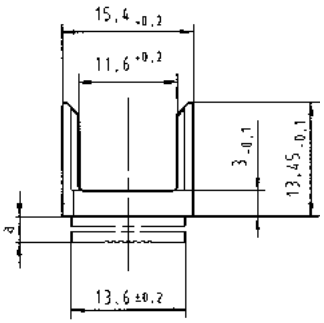

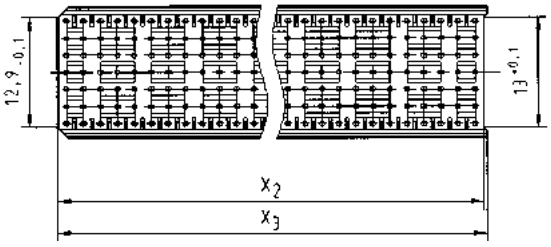

Board thickness [mm]	a [mm]
1.6 ± 0.4	3.1 ± 0.05
2.4 ± 0.4	2.3 ± 0.05
3.2 ± 0.4	1.5 ± 0.05
4.0 ± 0.4	0.7 ± 0.05

Contact positions	x_1 [mm]	x_2 [mm]	x_3 [mm]
19	18 x 2 (= 36)	38 – 0.2	38.4 – 0.2
22	21 x 2 (= 42)	44 – 0.2	44.4 – 0.2
25	24 x 2 (= 48)	50 – 0.2	50.4 – 0.2

Dimensions [mm]

Identification	Board thickness [mm]	Part number
Type AB shroud 25 positions	1.6 ± 0.4 2.4 ± 0.4 3.2 ± 0.4 4.0 ± 0.4	17 70 000 8001 17 70 000 8002 17 70 000 8003 17 70 000 8004
22 positions	1.6 ± 0.4 2.4 ± 0.4 3.2 ± 0.4 4.0 ± 0.4	17 70 000 7001 17 70 000 7002 17 70 000 7003 17 70 000 7004
19 positions	1.6 ± 0.4 2.4 ± 0.4 3.2 ± 0.4 4.0 ± 0.4	17 70 000 6001 17 70 000 6002 17 70 000 6003 17 70 000 6004

Dimensions

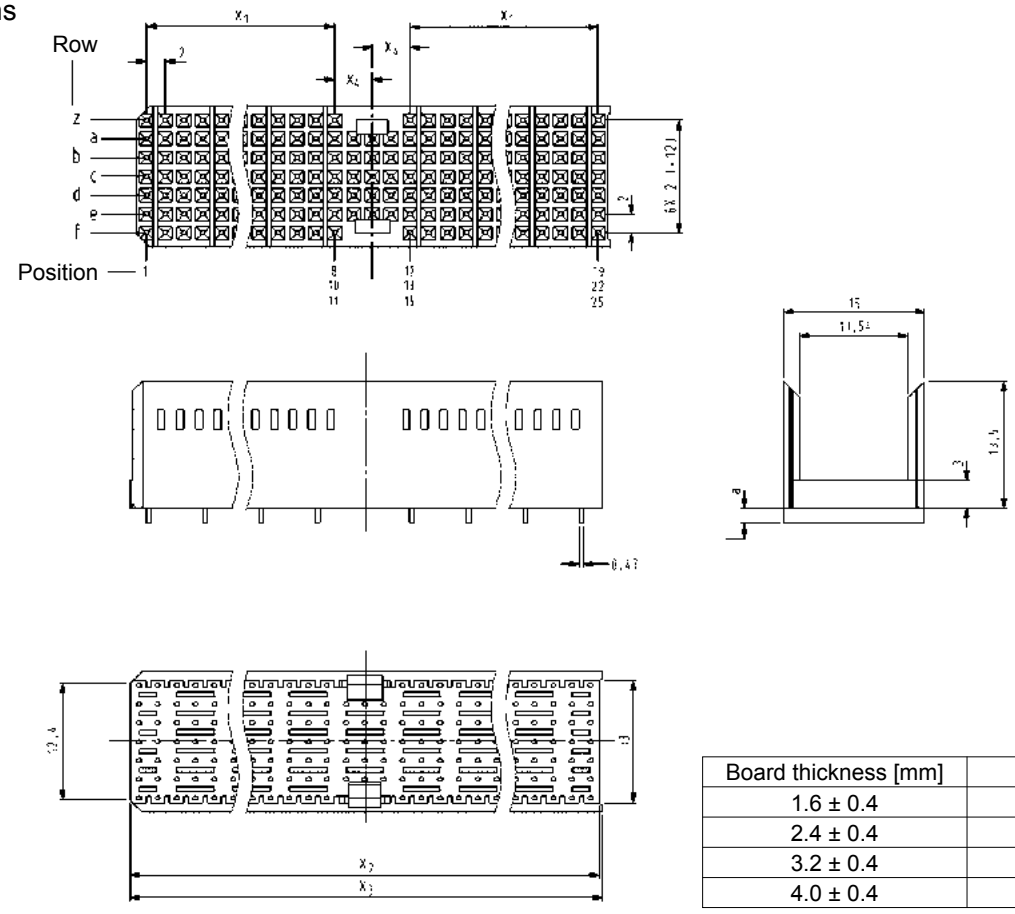

Board thickness [mm]	a [mm]
1.6 ± 0.4	3.1 ± 0.05
2.4 ± 0.4	2.3 ± 0.05
3.2 ± 0.4	1.5 ± 0.05
4.0 ± 0.4	0.7 ± 0.05

Contact positions	x_1 [mm]	x_2 [mm]	x_3 [mm]	x_4 [mm]
19	7 x 2 (= 14)	37.9	38.2	4
22	8 x 2 (= 16)	43.9	44.2	3
25	10 x 2 (= 20)	49.9	50.2	4

Dimensions [mm]

Identification	Board thickness [mm]	Part number
Type C shroud 11 positions	1.6 ± 0.4 2.4 ± 0.4 3.2 ± 0.4 4.0 ± 0.4	17 70 000 3001 17 70 000 3002 17 70 000 3003 17 70 000 3004

Dimensions

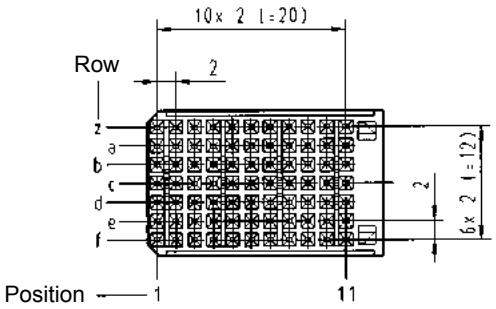

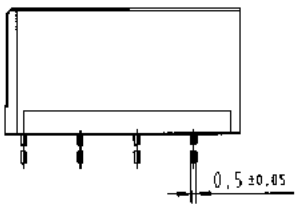

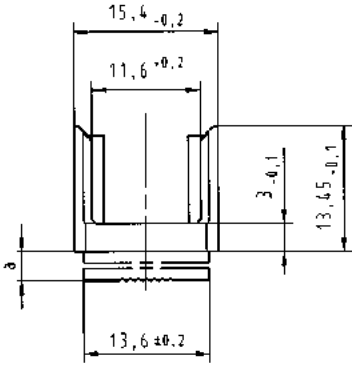

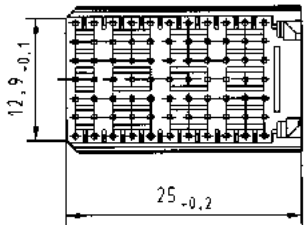

Board thickness [mm]	a [mm]
1.6 ± 0.4	3.1 ± 0.05
2.4 ± 0.4	2.3 ± 0.05
3.2 ± 0.4	1.5 ± 0.05
4.0 ± 0.4	0.7 ± 0.05

Dimensions [mm]

Identification	Part number
Guide pin	17 79 000 0080
Receptacle for guide pin	07 73 000 0280

Dimensions [mm]

Guide pin

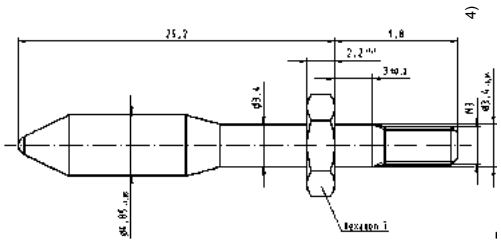

Receptacle for guide pin

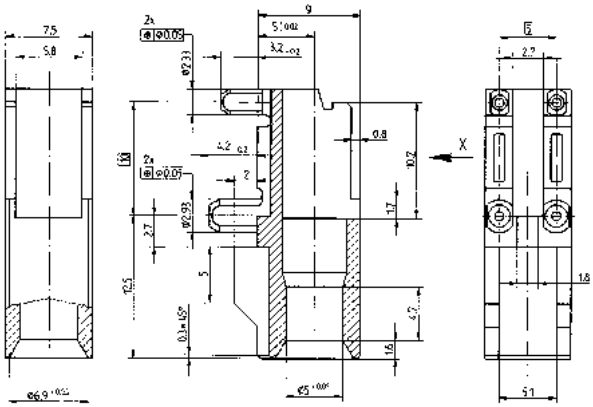

Board drillings (View-X)

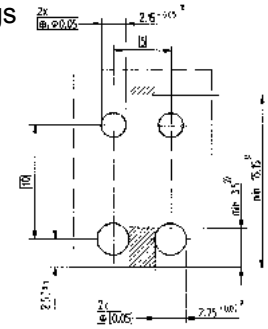

1) Non-metallised drillings
2) No tracks, except solder eyes
3) Limit area of components (valid for both pcb sides)
4) Recommended board drilling is 3.5 (-0.05) mm

General information

The guide pin solution from HARTING allows safe mating under sometimes extreme conditions. This might be large and heavy boards that bow under their own weight. Also insufficiently aligned or worn out rack systems can be tolerated better with the use of HARTING's guiding system, which also reduces the potential danger of damaging cards when being forced into flexing racks.

The guide pin and receptacle's design solution allows to overcome a 3 mm [.118'] offset between the backplane and the mating daughtercard. The reducing diameter of the pin (from 4.85 mm to 3.4 mm) ensures that its positioning task is smoothly transferred to the connectors as soon as they start to engage. Finally the thin diameter section of the guide pin is no longer positioned by the ferrule of the receptacle, ensuring that the pin is able to freely follow any movement imposed by the engaging connector. This ensures that there is no static stress between the connectors and the guiding system.

The rugged metal designed guide pin is screwed to the backplane with standard hexagon screws. Whereas the molded receptacle is designed with four press-in pegs that can be installed to the board together with the connectors.

The tooling can be ordered with the part numbers **07 79 000 0157** (top tool) and **07 79 000 0158** (bottom tool).

Recommended accessories: hexagon nut ISO 4032-M3-8
serrated lock washer DIN 6798-A-3.2 FSt

HARTING customer request form*

Should you need a specially loaded connector for your application, please use this request form. Fill out the drawing for the desired connector style and mark each position with the required contact length (A, B, …, S, T).

Type A

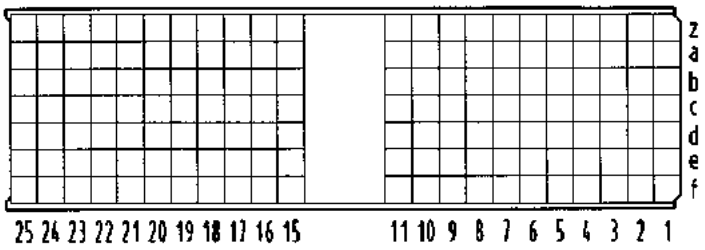

Contact dimensions [mm]

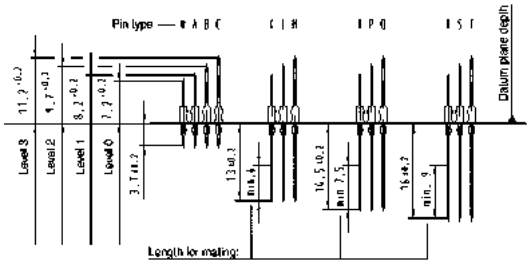

Type B (19, 22 or 25 positions)

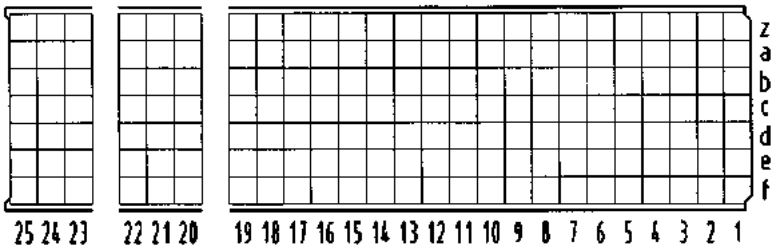

Type C

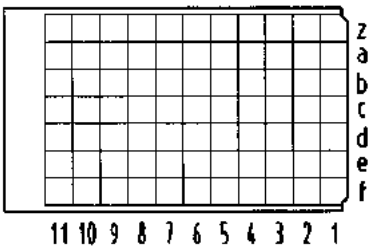

Type Monoblock 47

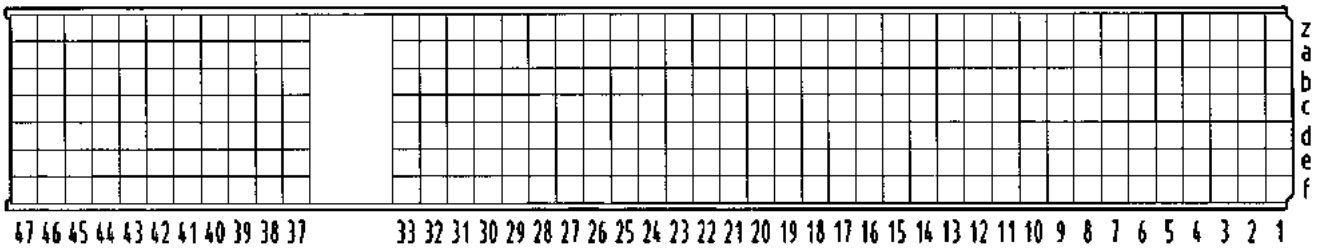

Name: _____

Company: _____

Address: _____

_____

Phone: _____

Fax: _____

E-Mail: _____

Performance level: ☐ 1 ☐ 2

Drawing: ☐ yes ☐ no

Samples: ☐ no ☐ yes, quantity

Volume (pcs./year): _____

Special requirements: _____

* For AB types see page 11.49
For D, E and DE types see page 11.50

HARTING customer request form

Should you need a specially loaded connector for your application, please use this request form. Fill out the drawing for the desired connector style and mark each position with the required contact length (A, B, …, S, T).

Type AB (19 positions)

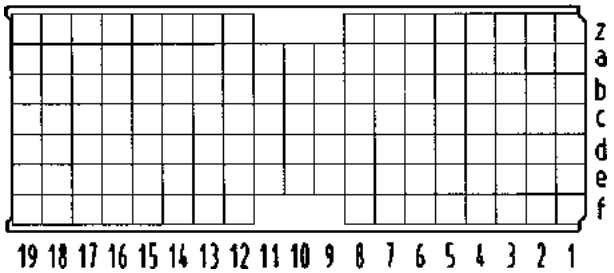

Contact dimensions [mm]

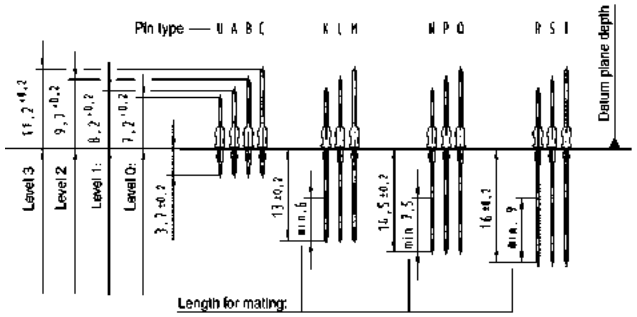

Type AB (22 positions)

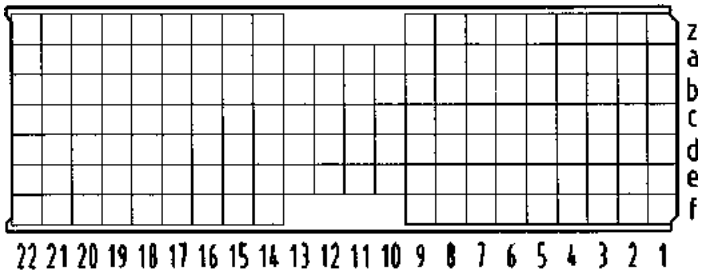

Type AB (25 positions)

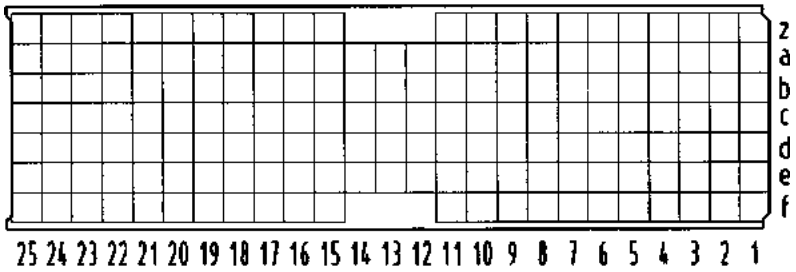

Name: _____

Company: _____

Address: _____

_____

Phone: _____

Fax: _____

E-Mail: _____

Performance level: ☐ 1 ☐ 2

Drawing: ☐ yes ☐ no

Samples: ☐ no ☐ yes, quantity

Volume (pcs./year): _____

Special requirements: _____

HARTING customer request form

Should you need a specially loaded connector for your application, please use this request form. Fill out the drawing for the desired connector style and mark each position with the required contact length (A, B, …, S, T).

Type D

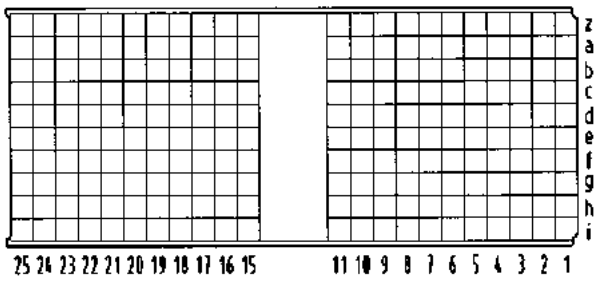

Type E

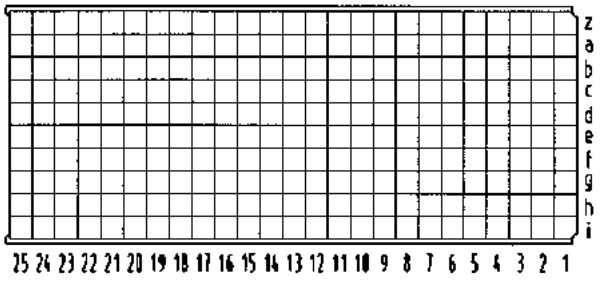

Type DE

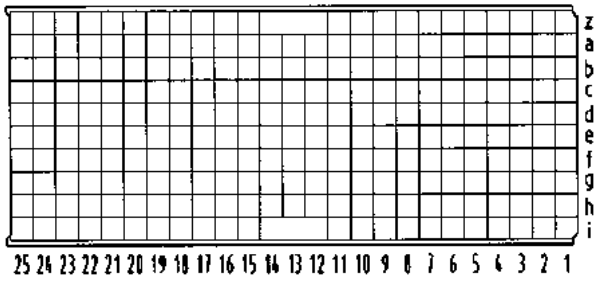

Contact dimensions [mm]

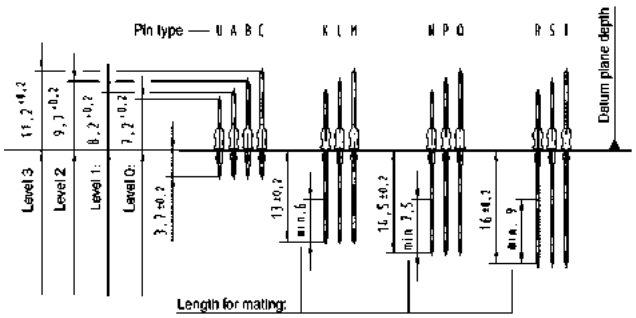

Name: _____

Company: _____

Address: _____

_____

Phone: _____

Fax: _____

E-Mail: _____

Performance level: ☐ 1 ☐ 2

Drawing: ☐ yes ☐ no

Samples: ☐ no ☐ yes, quantity

Volume (pcs./year): _____

Special requirements: _____

Notes

12. TCA Connectors

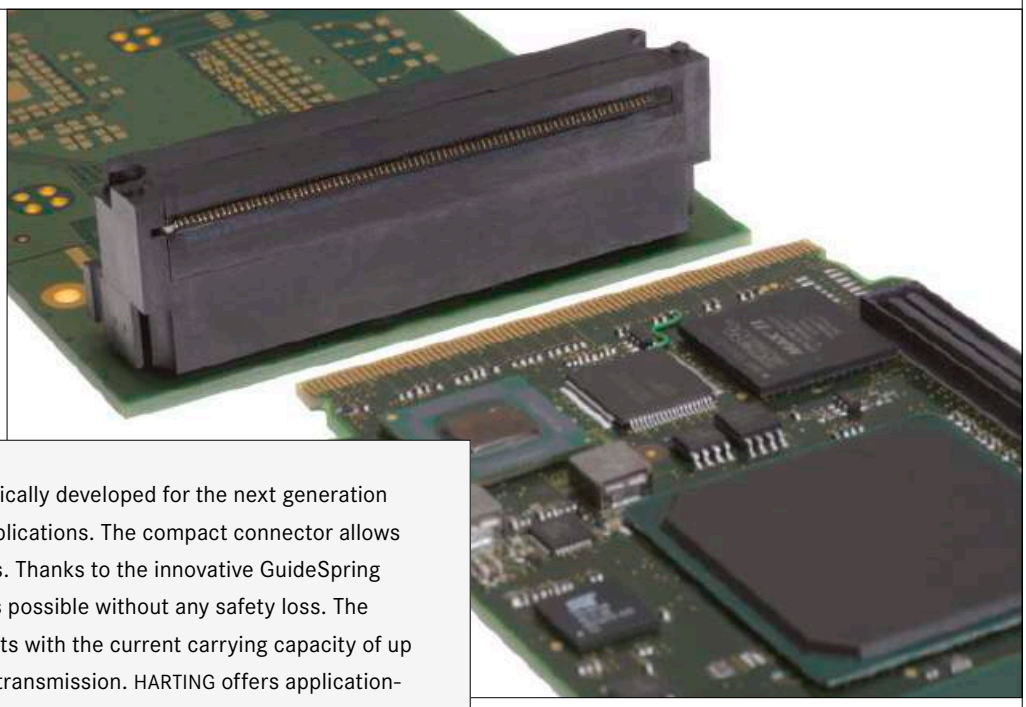

The TCA connectors have been specifically developed for the next generation of telecom, medical and industrial applications. The compact connector allows the transmission of highest data rates. Thanks to the innovative GuideSpring concept, the direct plug-in of a PCB is possible without any safety loss. The power connector offers power contacts with the current carrying capacity of up to 16 A as well as contacts for signal transmission. HARTING offers application-specific design-in support for the connectors, as well as the system analysis support.

Application profile:

CONNECTION TYPE		ENVIRONMENT		APPLICATION						
Board to Board	Cable/ Wire to Board	IP20	IP65 / IP67	Data	Signal	Power	high performance			
							Data transfer rate	Shielding	Number of contacts, contact density	Voltage, working current
●		●		●	●	●	●		●	●

Cable termination

Han-Quick Lock®	*IDC*	*Crimp*
Screw	*Cage clamp*	*Axial screw*

PCB termination

THT	*SMC*	*SMT*
Press-in		

Application standard

PICMG® AdvancedTCA® AdvancedMC™ µTCA™

Housing integration

Separate housing	*Integrated housing*

Contents

	Page
Introduction	**12.02**
General information	**12.04**
con:card+	**12.06**
AdvancedMC™ connectors for AdvancedTCA®	**12.08**
Power connectors for AdvancedTCA®	**12.10**
AdvancedMC™ connectors for MicroTCA™	**12.12**
Power output connectors for MicroTCA™	**12.14**

CONNECTORS FOR TCA

The TCA connectors have been developed for the open hardware standards AdvancedTCA®, AdvancedMC™ and MicroTCA™.
They are specified by the PCI Industrial Computer Manufacturers Group (PICMG), a consortium of more than 450 product suppliers. These innovative systems are finding increasing use for industrial control systems and computer systems.
HARTING is an active member of the PICMG and participated in the standardization process of the connectors for these systems. HARTING offers several connectors for signal and power transmission.
With the new "**con:**card**+**" connectors with press-in termination, HARTING has substantially improved the contact reliability of the AdvancedMC™ connector for MicroTCA™ and AdvancedTCA®. The key element of the new "**con:**card**+**" connector is the integrated GuideSpring, which is able to compensate any tolerance deviations of the AdvancedMC™ printed circuit boards by centrally positioning the circuit board within the connector slot. The GuideSpring allows HARTING to ensure the reliable connection of the circuit boards, which can be manufactured in large-scale production today.
Other advantages of the "**con:**card**+**" technology are the extremely smooth contact surface and a robust contact coating which allows the specified 200 mating cycles between the daughter card and the card edge connector.

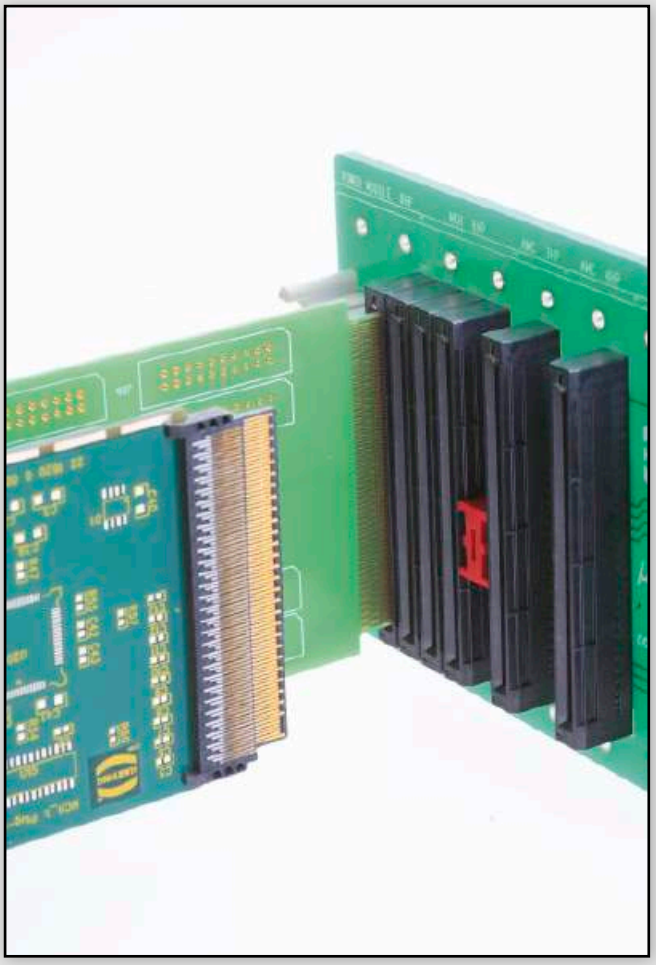

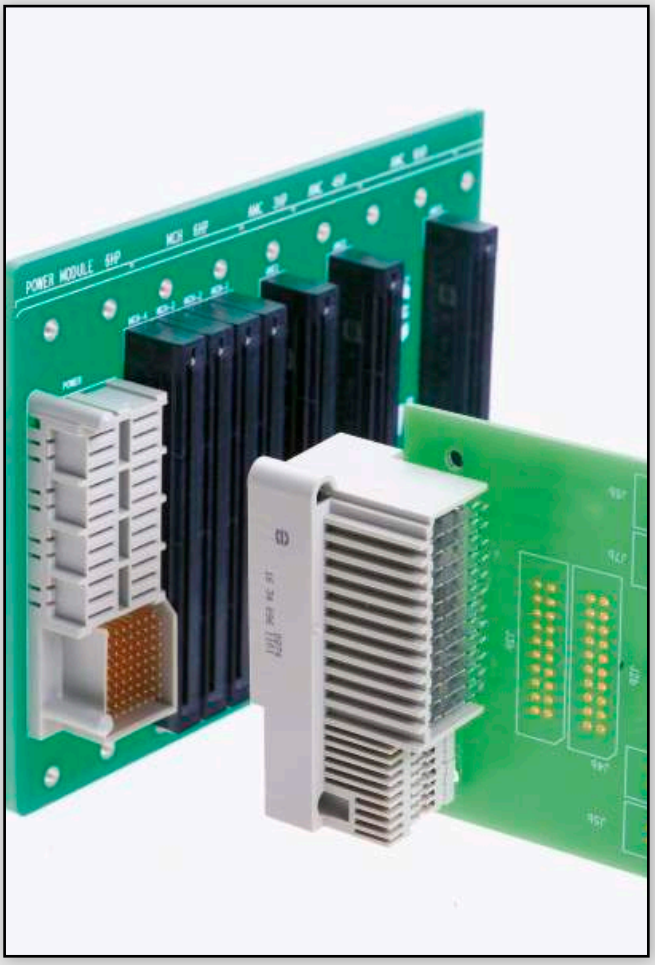

HIGH CONTACT RELIABILITY

The “**con:**card**+**” technology offers highest contact reliability as required for industry applications.

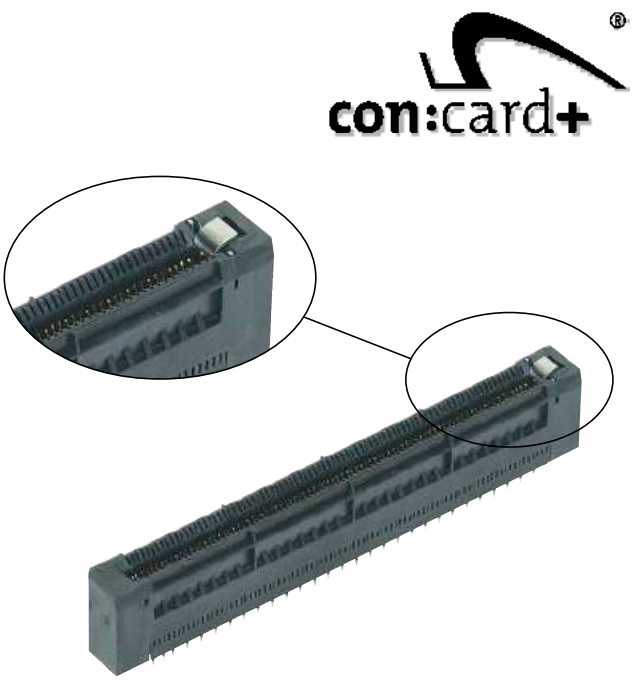

INTERNATIONAL STANDARD

The TCA connectors meet the requirements of the PICMG (PCI Industrial Computers Manufacturers Group) specifications AdvancedMC™, Advanced TCA® and MicroTCA™ and can be used for these applications.

PICMG®

AdvancedTCA®

AdvancedMC™

µTCA™

PICMG, formally known as the PCI Industrial Computing Manufacturing Group – is an industry consortium of over 450 companies. PICMG's purpose is to define standard architectures in an effort to reduce system costs and development cycles and since its 1994 foundation, PICMG has been responsible for the establishment of several of successfully implemented, open, industrial standards. Open standards have proven themselves to be very advantageous for system manufacturers and end-user, because they create multiple vendors of similar parts, low prices at high volumes, and a shortened time-to-market.

Historically, PICMG has created several successful standards.

- PICMG 1.x Series – a passive backplane PCI specification
- PICMG 2.x Series – the CompactPCI® standard

AdvancedTCA®

Today, the AdvancedTCA® series of specifications (PICMG 3.x) targets the requirements of the next generation of carrier grade telecommunications equipment. AdvancedTCA®, short for Advanced Telecom Computing Architecture and sometimes simply abbreviated ATCA®, incorporates an impressive suite of recent technological advancements including the latest trends in high speed interconnect technologies.

Features of AdvancedTCA® include optimization for high-capacity, high-performance telecom and industrial applications, improved reliability, manageability, redundability, and serviceability. Encompassing a technological growth path valid for up to ten years, AdvancedTCA® has earned a solid position within the telecom systems market.

AdvancedTCA® chassis with backplane

The rack or chassis, is responsible for housing the backplane and the daughtercards, as well as cooling and powering the system. HARTING offers the ATCA® power connector that energises the blades, both the straight backplane and the right angled daughtercard connector.

The backplane, said to be passive, is merely a medium for the daughtercards to communicate with each other. And, the daughtercards, sometimes called blades or boards, provide the system with its functionality and allow for an easy, hot-swappable module exchange from the front of the system.

Initially, many blades were designed with a fixed functionality, and they had to be replaced once their functionality became obsolete or the demands of the system changed. With the continuation of exponential technological growth, concept proved to be a costly endeavour for the end-user.

AdvancedMC™

To extend the functionality and modularity of AdvancedTCA®, blade manufacturers conceived the idea of upgradeable daughtercards, and began to insert mezzanine cards onto the blades when needed. To achieve a common mezzanine concept, PICMG developed the Advanced Mezzanine Card (AdvancedMC™) standard AMC.0.

AdvancedMC™ modules for different applications

For the use of Advanced Mezzanine Cards, as well called AdvancedMC™ modules, a carrier is necessary. A carrier is an ATCA® blade with only little functionality beyond AdvancedMC™ management. It contains the mechanical environment for the AdvancedMC™ modules. Depending on their size, up to eight AdvancedMC™ modules can be hot-swapped in and out of a carrier, this enabled the

AdvancedTCA® carrier board with AdvancedMC™ modules

creation of extremely scalable and upgradeable systems.

To connect AdvancedMC™ modules to carrier boards PICMG defined a new high-speed mezzanine connector: the AdvancedMC™ connector – a card edge connector mounted on the carrier board. It contacts directly with the module's PCB gold pads. Although PICMG defined four AdvancedMC™ connector types (B, B+, AB and A+B+), current market developments focus on type B+.

The HARTING AdvancedMC™ B+ connector features a new design element that supplements the standard – the GuideSpring. The GuideSpring significantly increases the mating reliability and prevents contact interruptions and surface wear when subjected to shocks or vibrations.

The press-fit termination technology provides significant cost and durability advantages over other termination technologies. The connector design allows for the use of a standard flat rock die. For more press-in process control, HARTING offers a special top and bottom tool.

µTCA™

This revolutionary AdvancedMC™-based design concept has led to the recent development of a completely mezzanine-based system – MicroTCA™. MicroTCA™, short for Micro Telecom Computing Architecture, is a more cost-efficient platform than AdvancedTCA® when dealing with smaller applications, yet powerful enough to address the needs of telecom, enterprise and medical applications.

This newly-implemented PICMG standard, outlined in the MTCA.0 specification, presents a design-concept whereby AdvancedMC™s – the same kind used in ATCA® systems – plug directly into a passive backplane; this eliminates the need for carrier boards.

MicroTCA™ double cube system

Naturally the mating face of the AdvancedMC™ connector for MicroTCA™ is the same as for ATCA®, but with a right angled mating direction. It contains the new GuideSpring and is available in press-in termination. PICMG members voted HARTING's MicroTCA™ connector footprint as the new MicroTCA™ standard connector for press-fit termination technology.

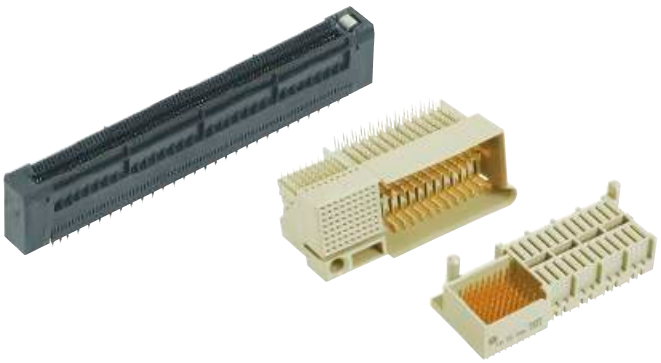

AdvancedMC™ and power connectors for MicroTCA™

The MicroTCA™ backplane is typically powered by special, field replaceable, hot-swapable, redundant Power Supply Units (PSU). The PSU connects to the backplane through a MicroTCA™ power connector (press-fit termination) also available from HARTING.

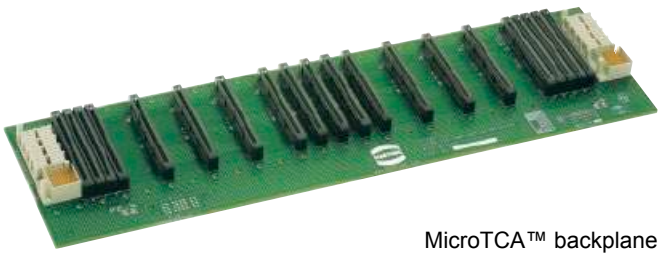

MicroTCA™ backplane

The module management is performed by a MicroTCA™ Carrier Hub, or MCH. An MCH is connected to the backplane by up to four adjacent card-edge connectors. One MCH can control up to 12 AdvancedMC™ modules, thus depending on redundancy requirements, workload, or both, one or two MCHs may be used within a single system.

What is con:card+?

con:card**+** is a quality seal for AdvancedMC™ connectors that helps to deliver a significant increase in the reliability of MicroTCA™ and AdvancedTCA® systems. In order to reach the target availability of 99.999 %, all system components must be carefully coordinated, and they must function reliably. The selection of suitable connectors is an essential, decisive factor here, as today it is virtually impossible for series production to meet the strict tolerances for the AdvancedMC™ modules as defined in the respective specifications. The so-called GuideSpring is ideally suited for compensating here, and represents just one of a total of five key advantages of the **con:**card**+** philosophy. All the advantages are introduced in the following. Please find further information also on the internet at www.concardplus.com.

Special contact design

*Unlike conventional mating systems with male and female connectors, the AdvancedMC™ has only one, not two, contact tongues per contact. In order to ensure a permanently reliable contact, this single contact tongue must press against the gold pad with sufficient force throughout the entire lifetime. In addition, the thickness of the AdvancedMC™ modules may fluctuate by ±10 %. To meet this challenge, HARTING utilizes a special contact design with very low relaxation for the **con:**card**+** connector.*

PdNi contact coating

In order better to meet the high requirements placed on the connectors, a palladium-nickel surface (PdNi) with additional gold flash is used. As a result, wear resistance is increased by roughly 30 %. Even when applied very thinly, PdNi surfaces offer a quality and corrosion-resistant coating that meets the high requirements placed on the connection far better than pure gold.

Smooth contact surface

The specification for the AdvancedMC™ entails 200 mating cycles for a module. On the PCB, the nickel/hard gold layer on the relatively soft copper can only stand up to this high load if the contact surface is absolutely smooth.
This is the case with the ***con:****card****+*** *connector. With years of experience in stamping techniques and the utilization of high-performance stamping tools with special process components, HARTING is actively involved in minimizing gold pad wear.*

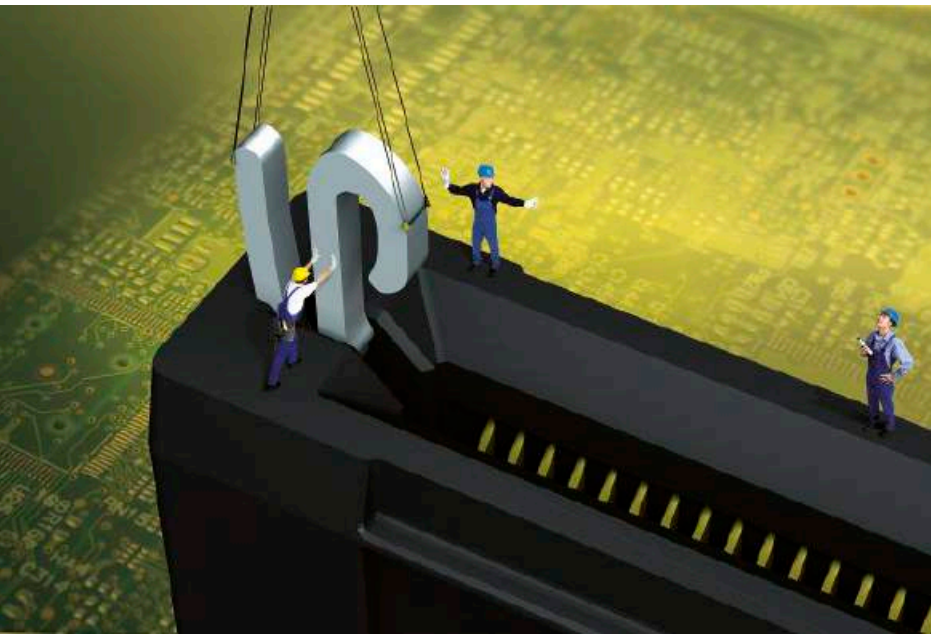

GuideSpring

PCB manufacturers are not capable of meeting the AdvancedMC™ modules' tight tolerances with certainty in the series process today. Just a single card with tolerances slightly larger than allowed by the specifications can lead to a system breakdown.
The ***con:****card****+*** *GuideSpring offsets these tolerance deviations by constantly pressing the module against the opposite wall. As this is displaced somewhat towards the middle, the slot is optimally designed for the AdvancedMC™ module, and the mating reliability increases tremendously.*
In addition, the GuideSpring secures the module position in the case of shocks and vibrations. This prevents loss of contact and surface wear.

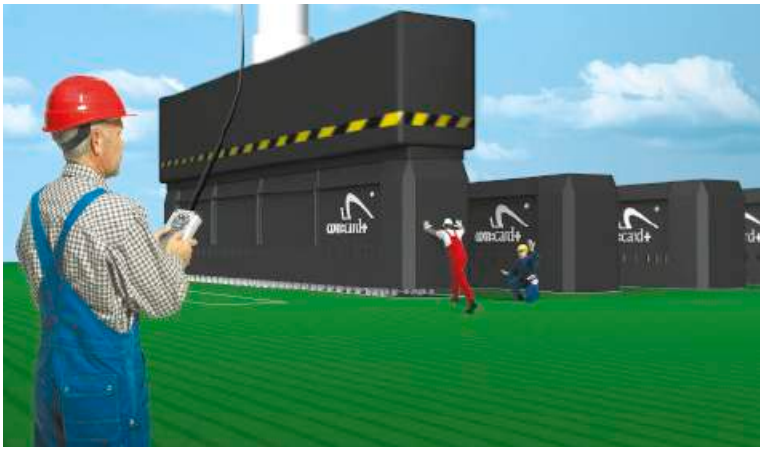

Press-fit technology

Press-fit technology results in a gas-tight, corrosion-resistant, low-ohm quality mechanical connection between the pin and the through contacting of the PCB. This remains reliably in contact and stable, even under conditions of high mechanical and thermal loads, such as vibration, bending and frequent temperature changes. This technology represents a tremendous advantage over other processing techniques. Measurements substantiate that the required transmission rates are easily attained.

Technical characteristics

Design according	PICMG AMC.0 (RoHS compliance)
Number of contacts	170
Contact spacing	0.75 mm
Clearance and creepage distance between contacts	0.1 mm min.
Working current of power contacts as defined in AMC.0 spec.	~ 2.2 A @ 70 °C max. 30 °C temp. rise (PICMG requirement min. 1.52 A)
Test voltage	80 $V_{r.m.s.}$
Working voltage typically	3.3 V; 5.0 V; 12.0 V
Initial contact resistance	
ground contacts	60 mΩ max.
signal, power, general purpose contacts	90 mΩ max.
Initial insulation resistance	100 MΩ min.
Nominal differential impedance	100 Ω±10 %

Max. crosstalk @ 25 ps risetime	Bottom route
Adjacent	0.55 %
Basic-to-extended (diagonal)	0.68 %
Basic-to-extended (opposite)	0.39 %
Multiline (five multi-aggressor differential pairs)	2.74 % max.

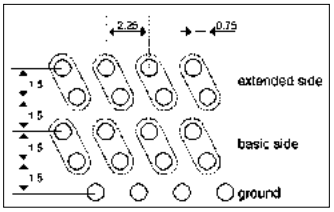

PCB library on request (PADS/Dx-Designer)

SPICE models and S-Parameter on request

Differential propagation delay	Basic side:	125 ps
	Extended side:	145 ps
Differential skew	Between basic and extended side:	20 ps
	Within basic and extended side:	±2 ps
Temperature range	-55 °C … +105 °C	
Durability as per AMC.0 specification	200 mating cycles	
Termination technique	Press-in termination	
Mating force	100 N max., typically 65 - 90 N (depending on AdvancedMC™)	
Withdrawal force	65 N max., typically 30 - 45 N (depending on AdvancedMC™)	

Materials

Moulded parts	Liquid Crystal Polymer (LCP), UL 94-V0
Contacts	Copper Alloy
Contact surface	Pd/Ni with Au flash
Packaging	Cardboard box (other packaging on request)

Recommended plated through hole specification

	A	Drill hole-Ø	$0.64^{\pm 0.01}$ mm
	B	Cu	25 - 35 µm
Tin plated PCB (HAL)	C	Sn	5 - 15 µm
	D	Hole-Ø	0.53 - 0.60 mm
Au / Ni plated PCB	C	Ni	3 - 7 µm
		Au	0.05 - 0.12 µm
	D	Hole-Ø	0.55 - 0.60 mm
Chemical tin plated PCB	C	Sn	0.8 - 1.5 µm
	D	Hole-Ø	0.56 - 0.60 mm
OSP copper plated PCB	C	---	---
	D	Hole-Ø	0.56 - 0.60 mm
	E	Pad size	min. 0.95 mm

The press-in zone of the AdvancedMC™ connector is tested according to Telcordia/Bellcore GR 1217CORE Part7. It is approved to be used with a plated through hole according IEC 60352-5 with a diameter of $0.55^{\pm 0.05}$ mm (drilled hole $0.64^{\pm 0.01}$ mm).
Based on our experiences regarding the production process of the PCB manufacturer we recommend a plated through hole configuration like shown in the above spreadsheet. To achieve the recommended plated through hole diameter, it is important to specify especially the drilled hole diameter of $0.64^{\pm 0.01}$ mm to your PCB supplier.
For drillings use e.g. drill bit # 72 (0.025" ≈ 0.64 mm).

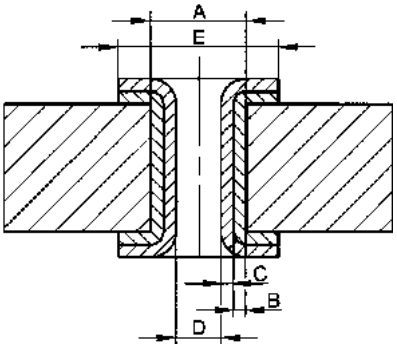

con:card+

Card edge connectors, angled

Identification	No. of contacts	Contact length [mm] termination side	Part number
AdvancedMC™ connector for ATCA®, type B+ with peg and with GuideSpring	170	2.0	16 04 170 5104 000
AdvancedMC™ connector for ATCA®, type B+ without peg and with GuideSpring	170	2.0	16 04 170 5106 000

With peg Without peg With peg Without peg

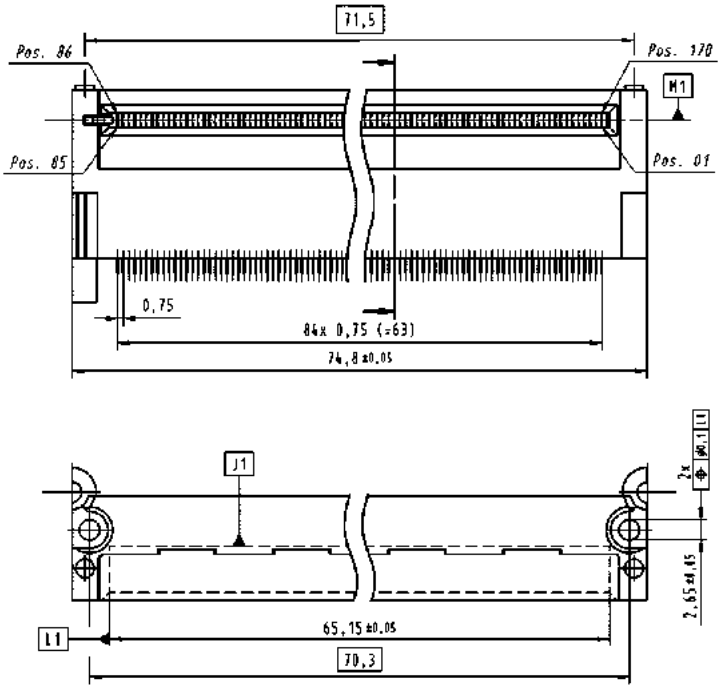

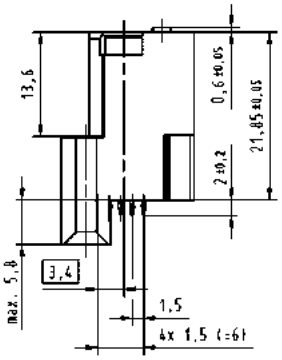

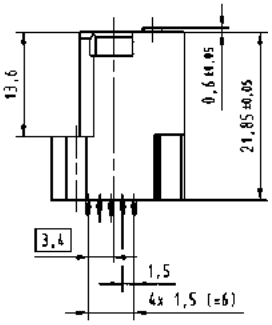

1) fixing-hole optional

2) non-metallized drillings

3) recommended plated through hole specification see page 12.08

Board drillings (view magnified)

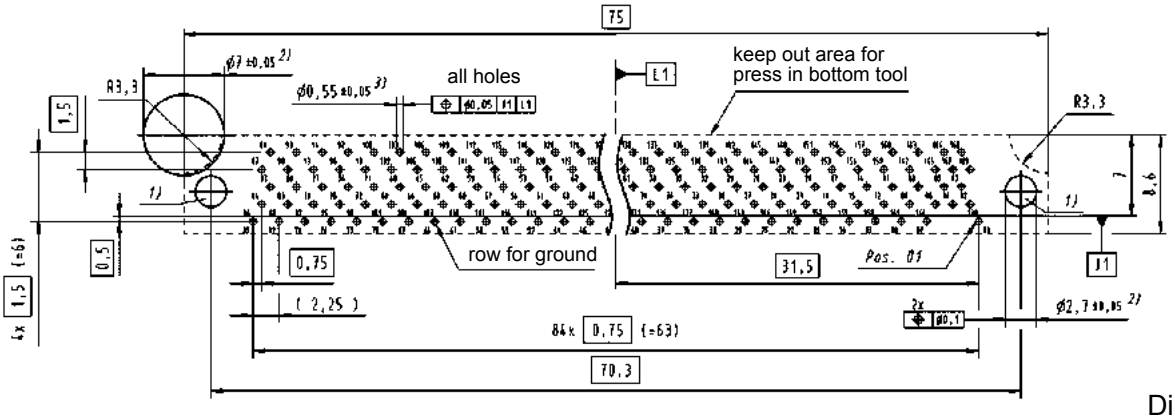

Dimensions [mm]

Technical characteristics

Design according	PICMG 3.0 R2.0
Total number of contacts	30, max. 34
Power contacts	8
Signal contacts	22, max. 26
Clearance and creepage distance between contacts	
Within group 5–16	0.7 mm min.
Within group 17–24	2.5 mm min.
25 to 26	5.5 mm min.
Within group 27–34	1.4 mm min.
13–16 to 17–20	3.0 mm min.
21–24 to 25–26	4.0 mm min.
25–26 to 27–29	2.0 mm min.
Sequential contact engagement	
1st	25, 26, 28, 29, 30, 31
2nd	33
3rd	5–24, 34
4th	27, 32
Working current	
Power contacts	16 A
Signal contacts	1 A
Test voltage	
Contacts 1–16	1000 $V_{r.m.s.}$
Contacts 17–34	2000 $V_{r.m.s.}$
Initial contact resistance	
Power contacts	≤ 2.2 mΩ
Signal contacts	≤ 8.5 mΩ
Insulation resistance	≥ 10^{10} Ω
Temperature range	-55 °C … +125 °C
Durability	250 mating cycles
Termination technique	Press-in termination
Mating force	67 N max.
Withdrawal force	67 N max.

Derating for ATCA® power contacts
Contact loading acc. PICMG 3.0

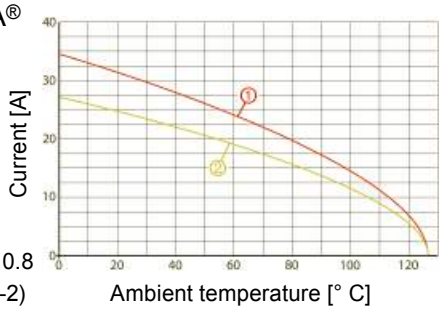

① Derating
② Derating @ $I_{max.}$ x 0.8 (acc. IEC 60512-5-2)

Materials

Moulded parts	PBT, glass-fibre filled, UL 94-V0
Contacts	Copper Alloy
Contact surface	Selectively gold plated
Packaging	Cardboard box (other packaging on request)

Recommended plated through hole specification

			Signal contacts	Power contacts
	A	Drill hole-Ø	$1.15^{\pm 0.025}$ mm	$1.75^{\pm 0.025}$ mm
	B	Cu	25 - 35 µm	25 - 35 µm
Tin plated PCB (HAL)	C	Sn	5 - 15 µm	5 - 15 µm
	D	Hole-Ø	1.00 – 1.10 mm	1.60 – 1.70 mm
Au / Ni plated PCB	C	Ni	3 - 7 µm	3 – 7 µm
		Au	0.05 - 0.12 µm	0.05 - 0.12 µm
	D	Hole-Ø	1.00 – 1.10 mm	1.60 – 1.70 mm
Chemical tin plated PCB	C	Sn	0.8 - 1.5 µm	0.8 - 1.5 µm
	D	Hole-Ø	1.00 – 1.10 mm	1.60 – 1.70 mm
Silver plated PCB	C	Ag	0.1 - 0.3 µm	0.1 - 0.3 µm
	D	Hole-Ø	1.00 – 1.10 mm	1.60 – 1.70 mm
OSP copper plated PCB	C	---	---	---
	D	Hole-Ø	1.00 – 1.10 mm	1.60 – 1.70 mm
	E	Pad size	min. 1.4 mm	min. 2.0 mm

The press-in zone of the AdvancedTCA® power connector is tested according to Telcordia/Bellcore GR 1217CORE Part7. It is approved to be used with a plated through hole according IEC 60352-5 with a diameter of $1.00^{+0.09}_{-0.06}$ mm for signal contacts and $1.60^{+0.09}_{-0.06}$ mm for power contacts (drilled hole $1.15^{\pm 0.025}$ mm resp. $1.75^{\pm 0.025}$ mm).
Based on our experiences regarding the production process of the PCB manufacturer we recommend a plated through hole configuration like shown in the above spreadsheet. To achieve the recommended plated through hole diameter, it is important to specify especially the drilled hole diameter of $1.15^{\pm 0.025}$ mm resp. $1.75^{\pm 0.025}$ mm to your PCB supplier.

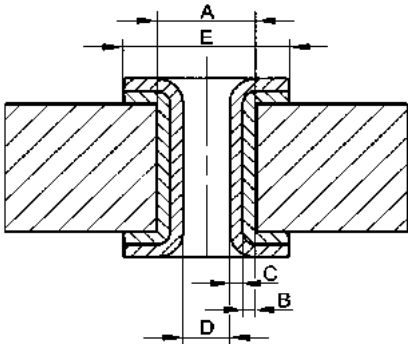

Power connectors for AdvancedTCA®

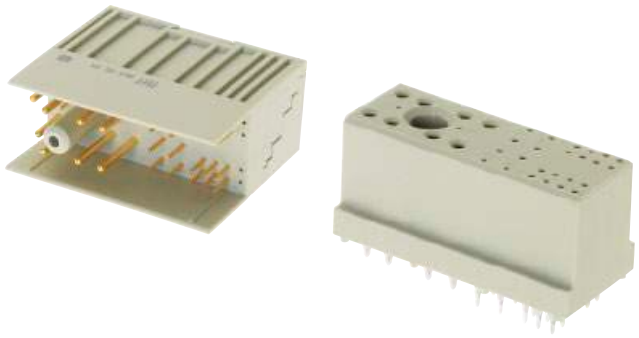

Identification	No. of contacts	Contact length [mm] termination side	Part number
Power connector for AdvancedTCA®, male	30 34	4.1 4.1	16 32 030 1101 000 16 32 034 1101 000
Power connector for AdvancedTCA®, female	30 34	5.3 5.3	16 31 030 1201 000 16 31 034 1201 000

Male connector with 30 contacts

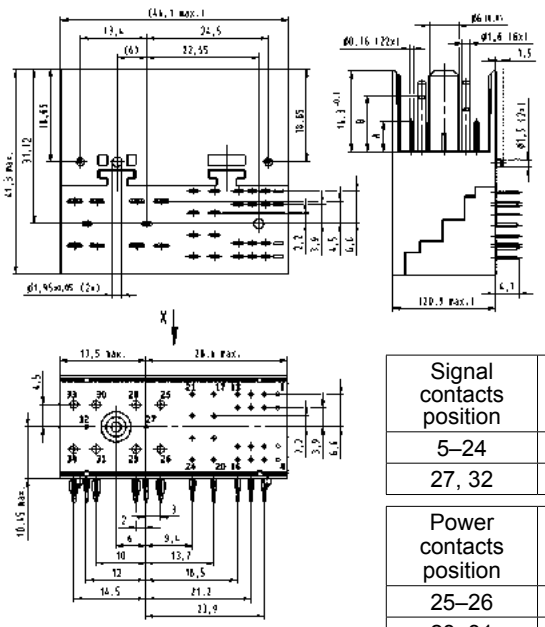

Signal contacts position	Dimension A
5–24	6.1
27, 32	3.8

Power contacts position	Dimension B
25–26	14.3
28–31	14.3
33	11.3
34	8.8

Female connector with 30 contacts

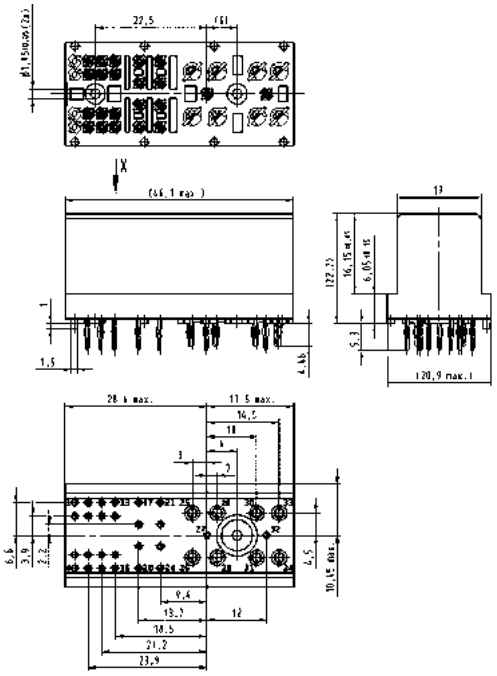

Board drillings

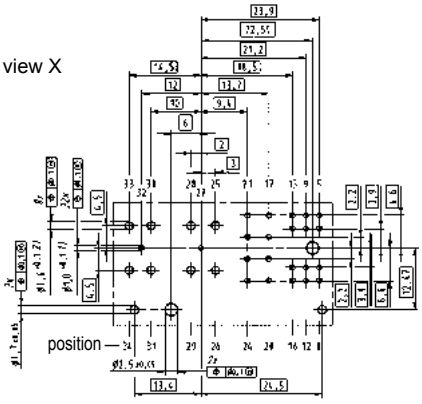

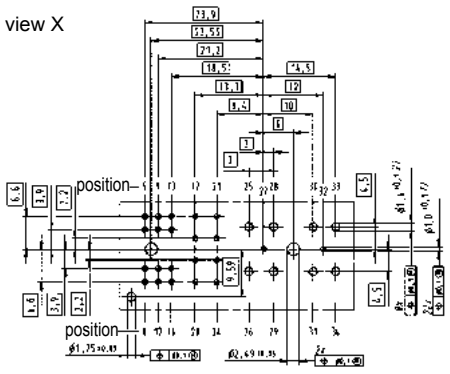

1) + 2) recommended plated through hole specification
see page 12.10

Dimensions [mm]

Technical characteristics

Design according	PICMG MTCA.0 R1.0 (RoHS compliance)
Number of contacts	170
Contact spacing	0.75 mm
Clearance and creepage distance between contacts	0.1 mm min.
Working current of power contacts as defined in MTCA.0 spec.	~ 2.3 A @ 70 °C max. 30 °C temp. rise (PICMG requirement min. 1.52 A)
Test voltage	80 $V_{r.m.s.}$
Working voltage typically	3.3 V; 5.0 V; 12.0 V
Initial contact resistance	25 mΩ max.
Initial insulation resistance	100 MΩ min.
Nominal differential impedance	100 Ω±10 %

Max. NEXT @ 25 ps risetime	Bottom route
Adjacent	0.65 %
Basic-to-extended (diagonal)	0.60 %
Basic-to-extended (opposite)	0.73 %
Multiline (five multi-aggressor differential pairs)	2.88 % max.

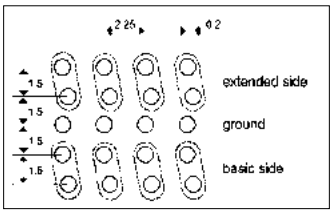

PCB library on request (PADS/Dx-Designer)

SPICE models and S-Parameter on request

Differential propagation delay	Basic side:	70 ps ± 5 ps
	Extended side:	70 ps ± 5 ps
Differential skew	Between basic and extended side:	±2 ps
	Within basic and extended side:	±2 ps
Temperature range	-55 °C … +105 °C	
Durability as per MTCA.0 spec.	200 mating cycles	
Termination technique	Press-in termination	
Mating force	100 N max., typically 60 - 80 N (depending on AdvancedMC™)	
Withdrawal force	65 N max., typically 40 - 60 N (depending on AdvancedMC™)	

Materials

Moulded parts	Liquid Crystal Polymer (LCP), UL 94-V0
Contacts	Copper Alloy
Contact surface	Pd/Ni with Au flash Au over Ni on request
Packaging	Cardboard box (other packaging on request)

Recommended plated through hole specification

	A	Drill hole-Ø	$0.64^{\pm 0.01}$ mm
	B	Cu	25 - 35 µm
Tin plated PCB (HAL)	C	Sn	5 - 15 µm
	D	Hole-Ø	0.53 - 0.60 mm
Au / Ni plated PCB	C	Ni	3 - 7 µm
		Au	0.05 - 0.12 µm
	D	Hole-Ø	0.55 - 0.60 mm
Chemical tin plated PCB	C	Sn	0.8 - 1.5 µm
	D	Hole-Ø	0.56 - 0.60 mm
OSP copper plated PCB	C	---	---
	D	Hole-Ø	0.56 - 0.60 mm
	E	Pad size	min. 0.95 mm

The press-in zone of the AdvancedMC™ connector is tested according to Telcordia/Bellcore GR 1217CORE Part7. It is approved to be used with a plated through hole according IEC 60352-5 with a diameter of $0.55^{\pm 0.05}$ mm (drilled hole $0.64^{\pm 0.01}$ mm).
Based on our experiences regarding the production process of the PCB manufacturer we recommend a plated through hole configuration like shown in the above spreadsheet. To achieve the recommended plated through hole diameter, it is important to specify especially the drilled hole diameter of $0.64^{\pm 0.01}$ mm to your PCB supplier.
For drillings use e.g. drill bit # 72 (0.025" ≈ 0.64 mm).

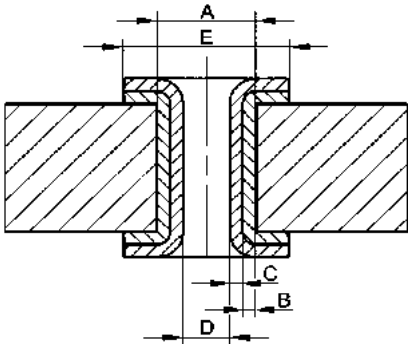

con:card+

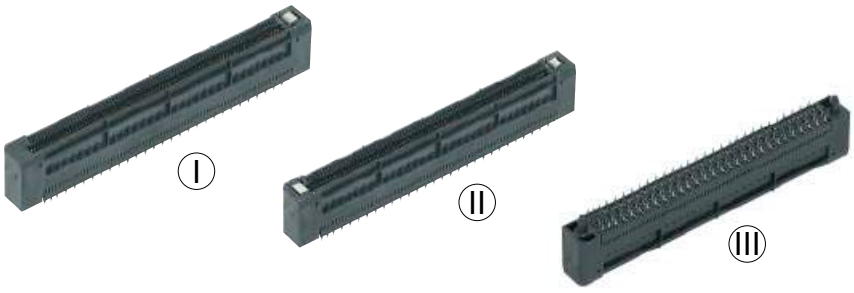

Card edge connectors, straight

Identification	No. of contacts	Contact length [mm] termination side	Part number
AdvancedMC™ connectors for MicroTCA™			
with GuideSpring (I)	170	2.1	16 11 170 5202 000
with GuideSpring and protection shield (II)	170	2.1	16 11 170 5205 000
with GuideSpring and alignment peg (III)	170	2.1	16 11 170 5206 000
with GuideSpring, protection shield and alignment peg	170	2.1	16 11 170 5207 000

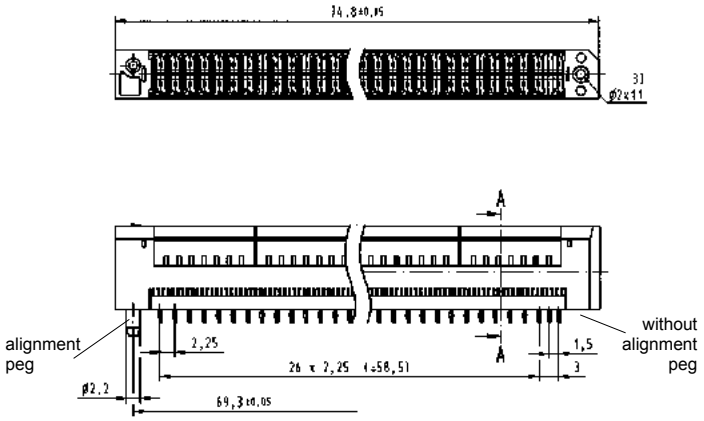

with alignment peg

without alignment peg

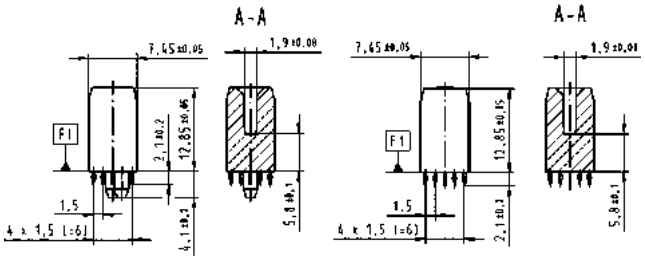

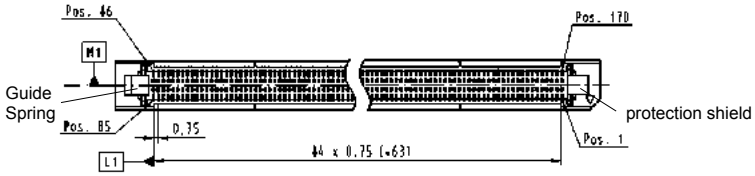

1) recommended plated through hole specification see page 12.12

2) non-metallized drillings
optional: for part numbers
16 11 170 5202 000 and 16 11 170 5205 000
mandatory: for part numbers
16 11 170 5206 000 and 16 11 170 5207 000

3) for optional fixing: use self-tapping screws for plastic, 2.2 x length
(length = PCB thickness + min. 6.5 mm to max. 10 mm)
e.g. HARTING part number 09 06 001 9974
Screwing torque references:
PCB + 6.5 mm: 20 cNm
PCB + 10 mm: 40 cNm

Board drillings (view magnified)

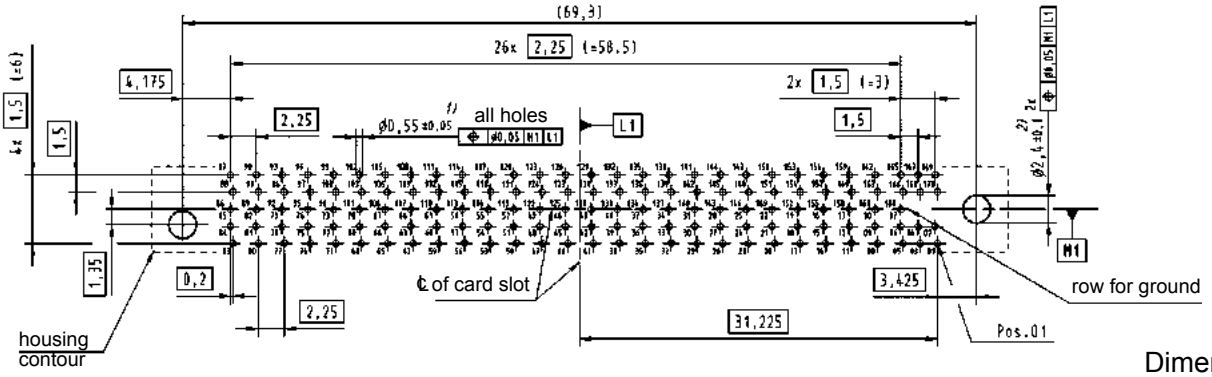

Dimensions [mm]

Technical characteristics

Design according	PICMG MTCA.0 R1.0 (RoHS compliance)
Total number of contacts	96
Power contacts	24
Signal contacts	72
Sequential contact engagement	
1st	Power 4–11
2nd	Power 1–3, power 12–24
3rd	Signal A2–H9
4th	Signal A1
Working current	
Power contacts	9.3 A @ 80 % derating acc. IEC 60512 and 70 °C ambient temperature and 30 °C temperature rise
Signal contacts	1 A @ 80 % derating acc. IEC 60512 and 70 °C ambient temperature
Initial contact resistance	
Power contacts	≤ 5 mΩ
Signal contacts	≤ 25 mΩ
Initial insulation resistance	≥ 100 MΩ min.
Temperature range	-55 °C … +105 °C
Durability	200 mating cycles
Termination technique	Press-in termination
Mating force	145 N max.
Withdrawal force	110 N max.

Derating for MicroTCA™ power contacts
Contact loading acc. MTCA.0

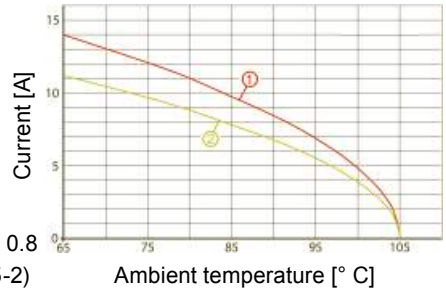

① Derating
② Derating @ $I_{max.}$ x 0.8 (acc. IEC 60512-5-2)

Ambient temperature [° C]

Materials

Moulded parts	PBT, glass-fibre filled, UL 94-V0
Contacts	Copper Alloy
Contact surface	
Power contacts:	selectively gold plated
Signal contacts:	selectively PD/Ni plated
Packaging	Tray packaging (other packaging on request)

Recommended plated through hole specification

	A	Drill hole-Ø	$0.7^{\pm 0.02}$ mm
	B	Cu	25 - 35 µm
Tin plated PCB (HAL)	C	Sn	5 - 15 µm
	D	Hole-Ø	0.60 - 0.65 mm
Au / Ni plated PCB	C	Ni	3 - 7 µm
		Au	0.05 - 0.12 µm
	D	Hole-Ø	0.60 - 0.65 mm
Chemical tin plated PCB	C	Sn	0.8 - 1.5 µm
	D	Hole-Ø	0.60 - 0.65 mm
Silver plated PCB	C	Ag	0.1 - 0.3 µm
	D	Hole-Ø	0.60 - 0.65 mm
OSP copper plated PCB	C	---	---
	D	Hole-Ø	0.60 - 0.65 mm
	E	Pad size	min. 1.0 mm

The press-in zone of the MicroTCA™ power connector is tested according to Telcordia/Bellcore GR 1217CORE Part7. It is approved to be used with a plated through hole according IEC 60352-5 with a diameter of $0.60^{+0.05}$ mm (drilled hole $0.70^{\pm 0.02}$ mm).
Based on our experiences regarding the production process of the PCB manufacturer we recommend a plated through hole configuration like shown in the above spreadsheet. To achieve the recommended plated through hole diameter, it is important to specify especially the drilled hole diameter of $0.70^{\pm 0.02}$ mm to your PCB supplier.

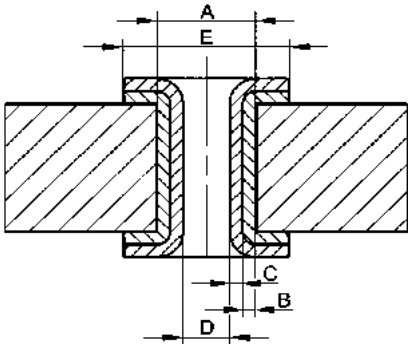

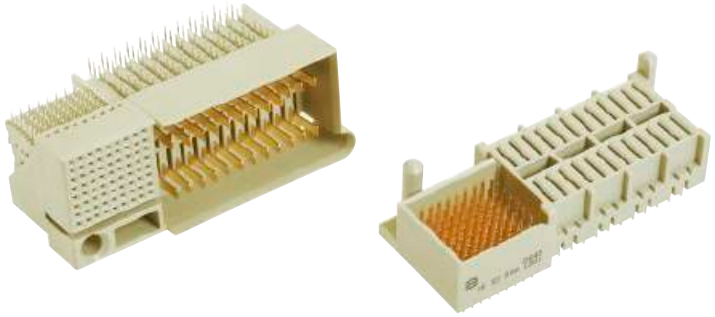

Identification	No. of contacts	Contact length [mm] termination side	Part number
Power output connectors for MicroTCA™			
module version	96	2.8	16 34 096 1101 000
backplane version	96	3.7	16 33 096 1201 000

Module version

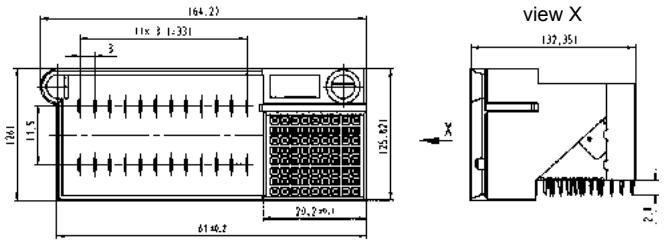

Backplane version

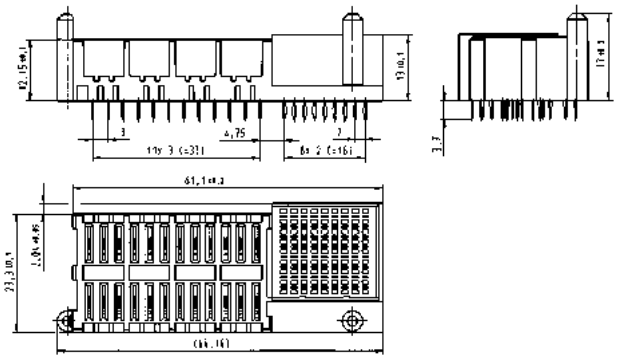

Board drillings

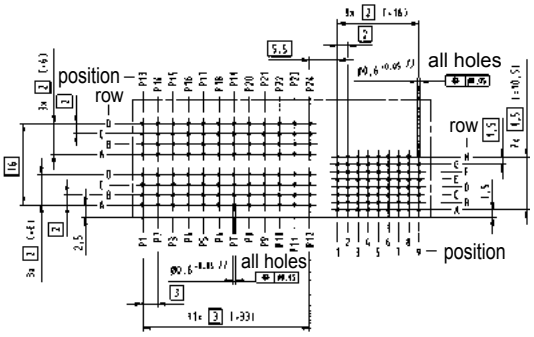

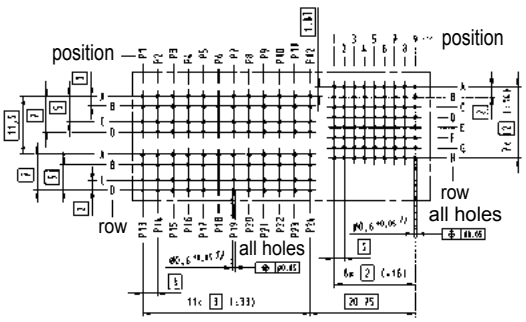

1) recommended plated through hole specification see page 12.14

Dimensions [mm]

Protection Block for MicroTCA™ backplanes

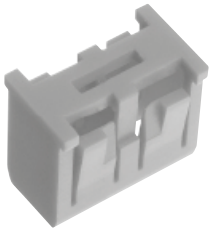

Identification	Part number
MicroTCA™ Protection Block	16 79 000 0010 000

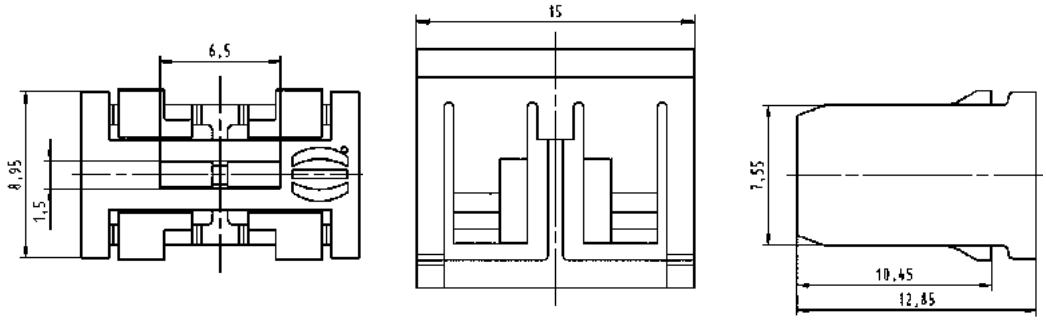

The MicroTCA™ specification defines modules with the option of multiple mating interfaces like the MCH module for system management and switching. There are four different pitches defined for the module interfaces and the backplane connectors respectively, the basic unit is called horizontal pitch (HP) and is 5.08 mm (0.2 inch).

Compact-Size	3 HP	15.24 mm
Mid-Size	4 HP	20.32 mm
Full-Size	6 HP	30.48 mm
MCH	1.5 HP	7.62 mm

Any MCH (or other multiple mating interface modules) with more than two mating interfaces (2x MCH-pitch 1.5 HP = Compact-Size pitch 3 HP) could unintentional mate with connectors of the adjacent slot or could be plugged into the wrong slot. Even though the pin-assignment and e-keying for the MCH is defined, it can cause system failures or even destroy hardware if a MCH is inserted into two adjacent AMC Compact-Size slots. For other multiple mating interface modules, this situation is even worse, because neither e-keying nor pin assignment is specified in MTCA.0.

MicroTCA™ backplane with protection blocks

To prevent errors in case of misinsertion, MTCA.0 R1.0 chapter 2.13 outlines protection blocks that occupy the space between two adjacent connectors in a Compact-Size slot. Furthermore this protection block can be used for keying functions of multiple mating interface modules.

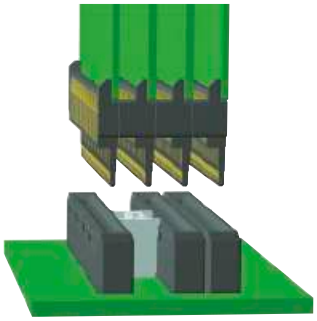

The free space between the backplane connectors is occupied by the protection block

HARTING designed a protection block fully independent of the backplane and sub rack design. The HARTING protection block is clipped between two connectors, hence no fixing features (holes, clips...) need to be designed into the backplane or the sub rack mechanics. The assembly is done quick and easy by hand. It can even be installed easily after the backplane is mounted with a simple flat-head screwdriver, an easy removal is possible in a similar way. The keying block can be placed into four different positions, hence a keying of multitongue modules by using tongues with a cutout is possible.

Notes

13. Micro Card Edge Connectors

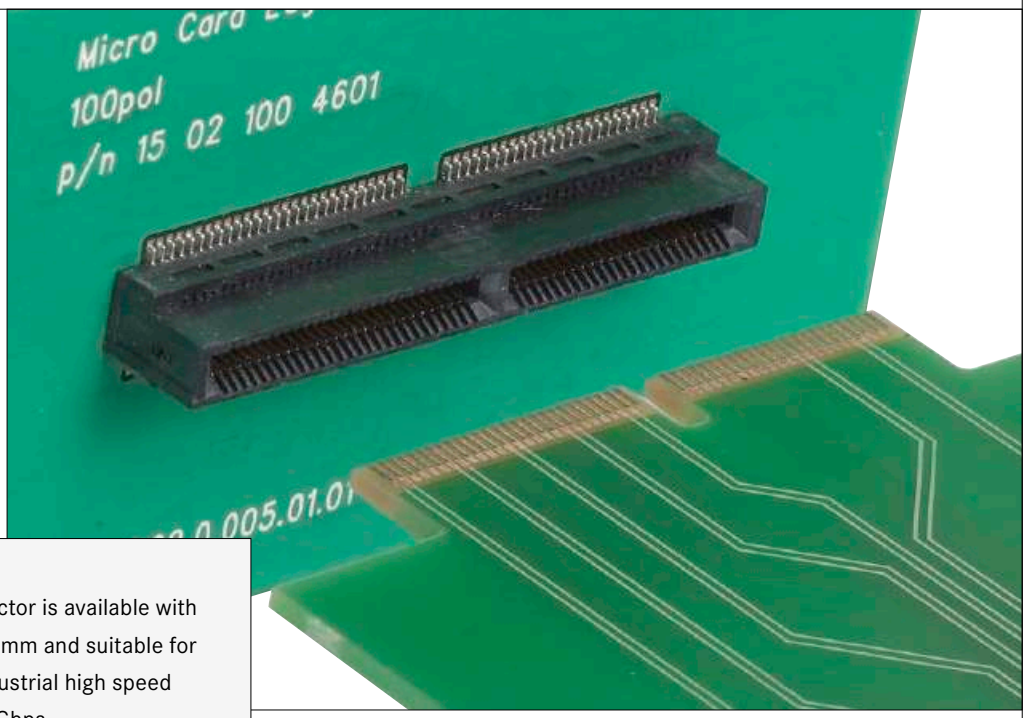

The HARTING Micro Card Edge Connector is available with 40 and 100 contacts at a pitch of 0.8 mm and suitable for telecommunications, medical and industrial high speed applications with data rates up to 14 Gbps.

Application profile:

CONNECTION TYPE		ENVIRONMENT		APPLICATION						
Board to Board	Cable/ Wire to Board	IP20	IP65 / IP67	Data	Signal	Power	high performance			
							Data transfer rate	Shielding	Number of contacts, contact density	Voltage, working current
●		●		●			●		●	

Cable termination

Han-Quick Lock® | *IDC* | *Crimp*

Screw | *Cage clamp* | *Axial screw*

PCB termination

THT | *SMC* | *SMT*

Press-in

Application standard

SCSI

Housing integration

Separate housing | *Integrated housing*

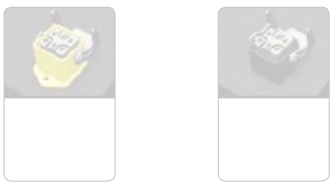

Contents

	Page
Micro Card Edge connector system – introduction	**13.02**
Technical characteristics, board dimensions	**13.05**
40pin connector	**13.06**
100pin connector	**13.07**

MICRO CARD EDGE CONNECTORS

HARTING offers the new Micro Card Edge Connector in surface-mounting technology for card gauges of 1.6 mm. It is suitable for board to board mezzanine as well as for small ´pluggable daughter card applications´. The key feature for mezzanine applications is the very flexible stacking height of parallel boards by utilizing a small board between the connectors. This gives flexibility in the mechanical design of the system.
The HARTING Micro Card Edge Connector is able to transfer data rates up to 14 Gbps, suitable for telecommunications, medical and industrial high speed applications. It is available with 40 and 100 contacts at a pitch of 0.8 mm. An extremely smooth contact surface achieved by high performance stamping tools and a special after – treatment ensures low insertion forces and a high contact reliability.
HARTING´s Micro Card Edge Connector offers excellent manufacturing features like a tape & reel packaging with a pick & place pad for nozzle in high volume productions.

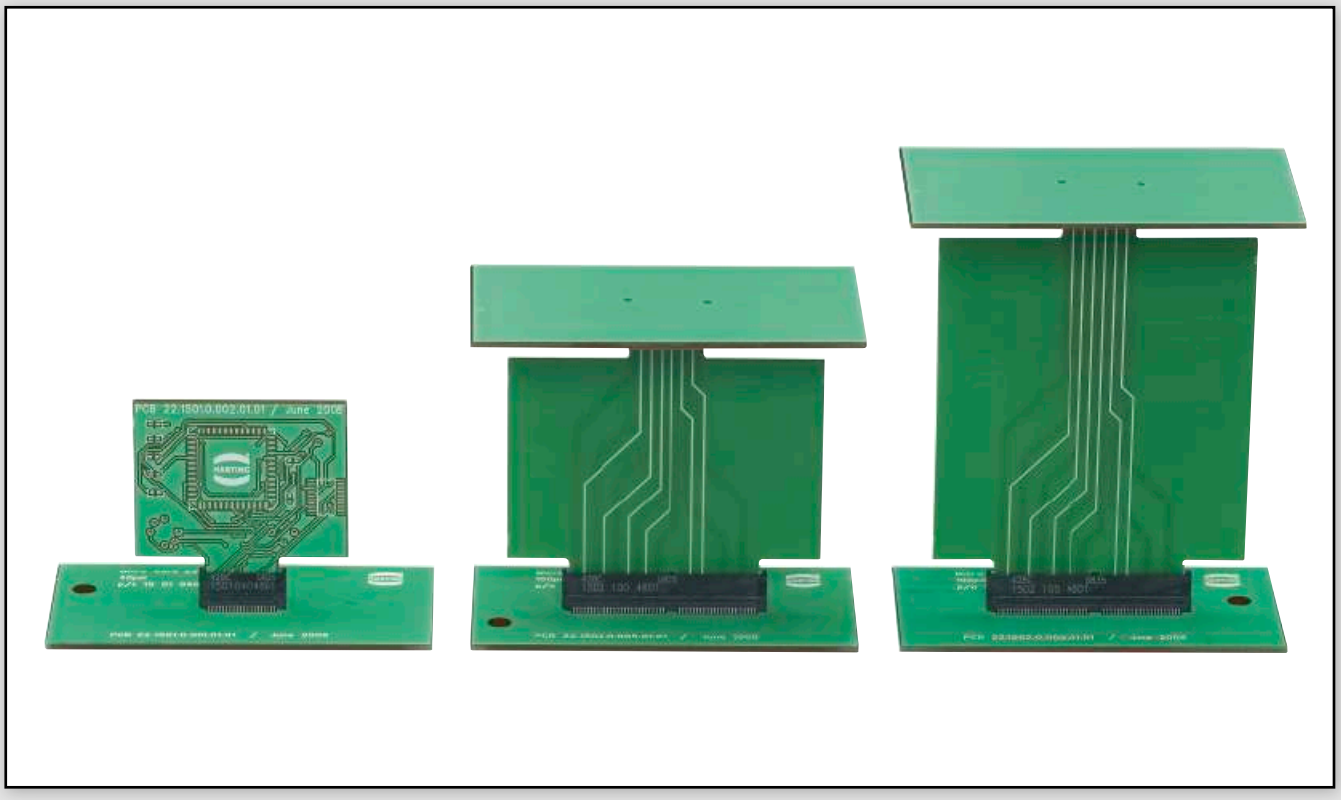

Specific features of the product range

High speed data transmission up to 14 Gbps between mezzanine or daughter card boards in telecom, medical, datacom and industrial applications.

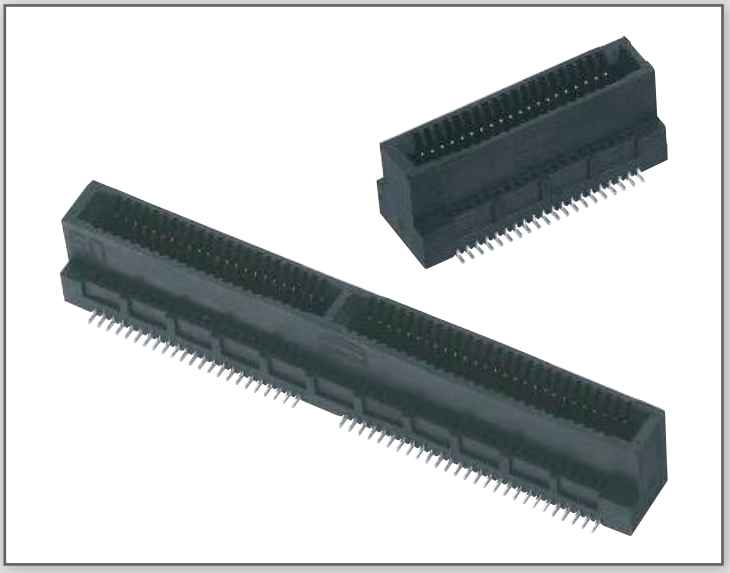

Excellent manufacturing features for high volume production

- SMT termination
- Tape & reel packaging with pick & place pad for nozzle

Flexible stacking height of parallel boards by utilizing a small board between the connectors.

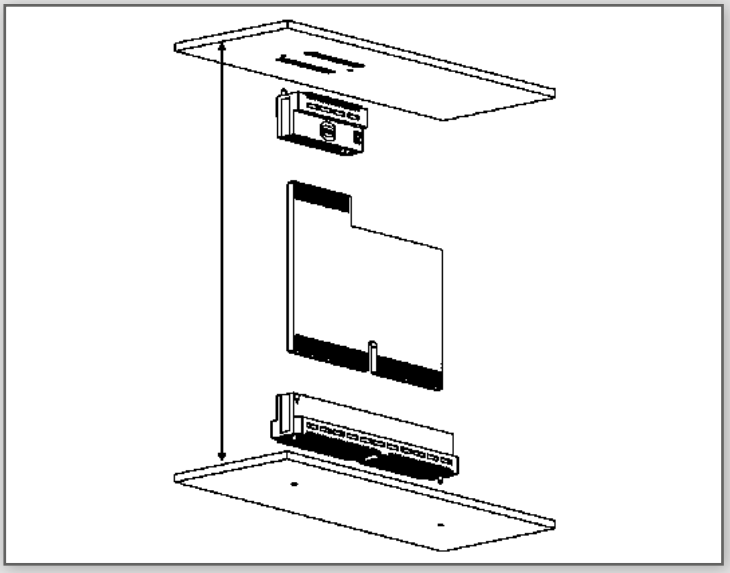

Notes

Contact spacing	: 0.8 mm
Working current	: 1.7 A at 80 °C ambient
Test voltage	: 600 V AC
Mating cycles	: 200
Number of contacts	: 40, 100
Mating card thickness	: 1.6 + 0.1 mm
Operating temperature	: -55 °C … +125 °C
Max processing temperature	: 230 °C for 60 sec. or 260 °C for 20 sec.
ROHS-compliance	: yes
Materials	
Mouldings	: LCP, glass-fibre filled, UL 94-V0
Contacts	: Copper alloy with Ni plating
Contact surface	
Contact zone	: Pd/Ni plating with Au flash
Termination zone	: Sn/Ni plating

Board dimensions

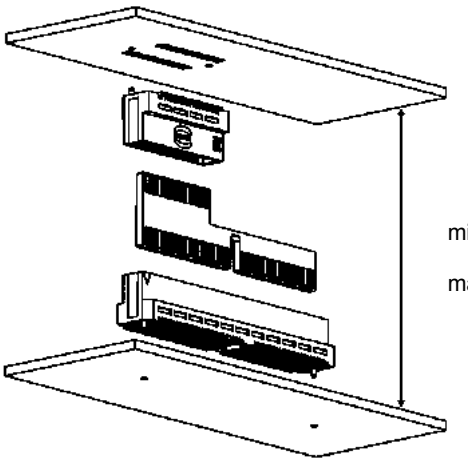

min. 20 mm

max. ∞

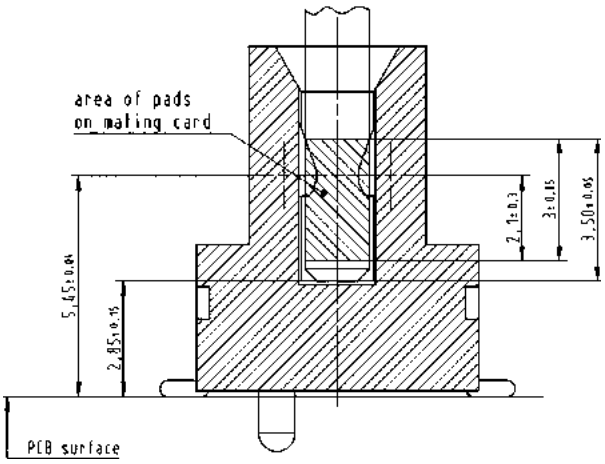

Recommended mating card layout

40pin

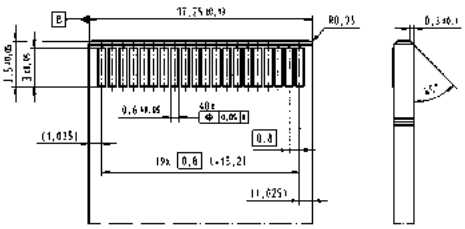

100pin

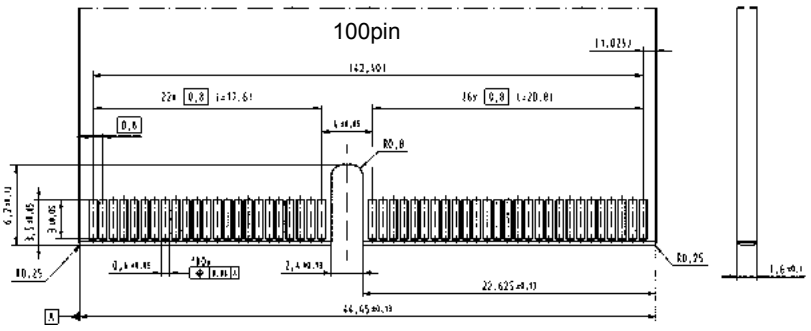

40pin connector

Identification	Number of contacts	Part number	Drawing	Dimensions in mm
Micro Card Edge connector				
2800 pieces in a “Tape and Reel” packaging (14 reels with 200 pcs.)	40	15 01 040 4601 040		
200 pieces in a “Tape and Reel” packaging	40	15 01 040 4601 042		
Single connector sample	40	15 01 040 4601 333		
Board layout				
“Tape and Reel” packaging				
Reel dimensions				

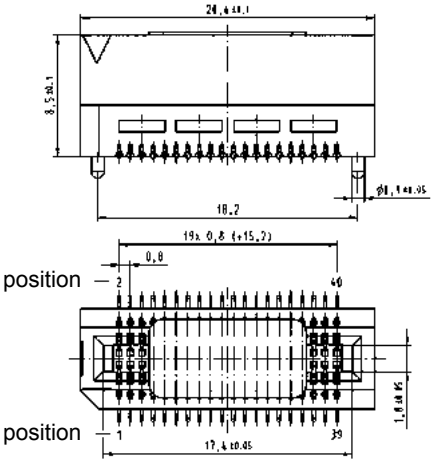

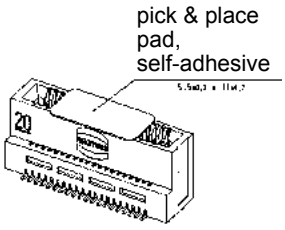

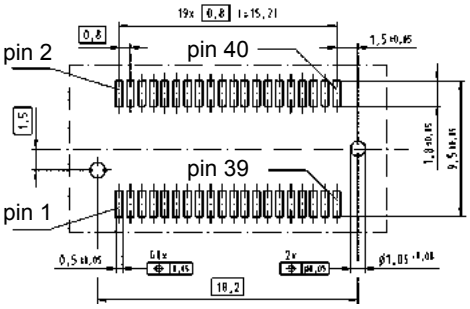

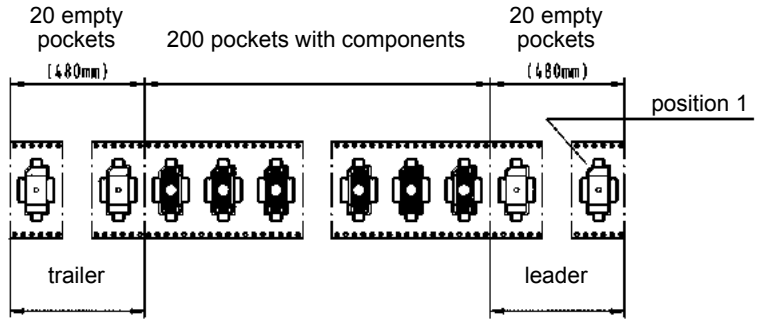

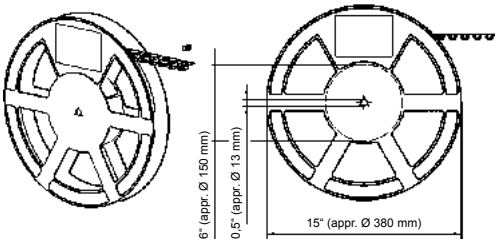

100pin connector

Identification	Number of contacts	Part number	Drawing	Dimensions in mm
Micro Card Edge connector 1800 pieces in a “Tape and Reel” packaging (9 reels with 200 pcs.)	100	15 02 100 4601 040	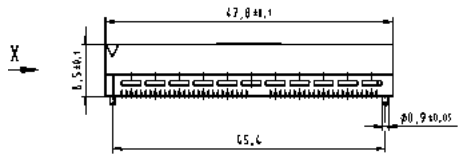	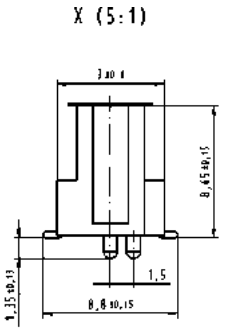
200 pieces in a “Tape and Reel” packaging	100	15 02 100 4601 042	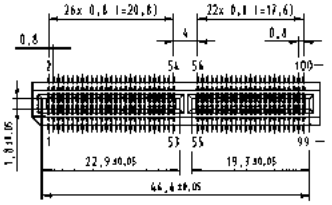	
Single connector sample	100	15 02 100 4601 333		
Board layout			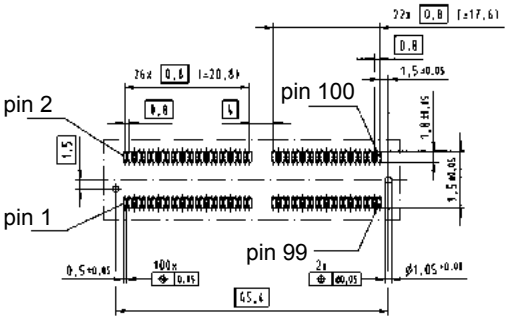	
“Tape and Reel” packaging			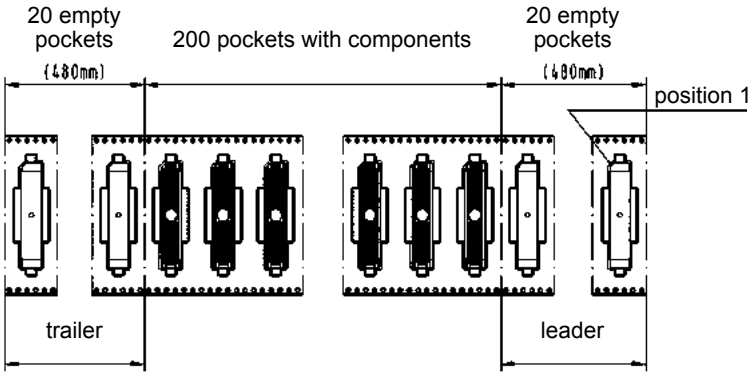	
Reel dimensions			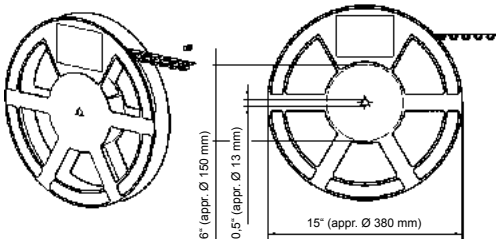	

14. *har*-flex® Connectors

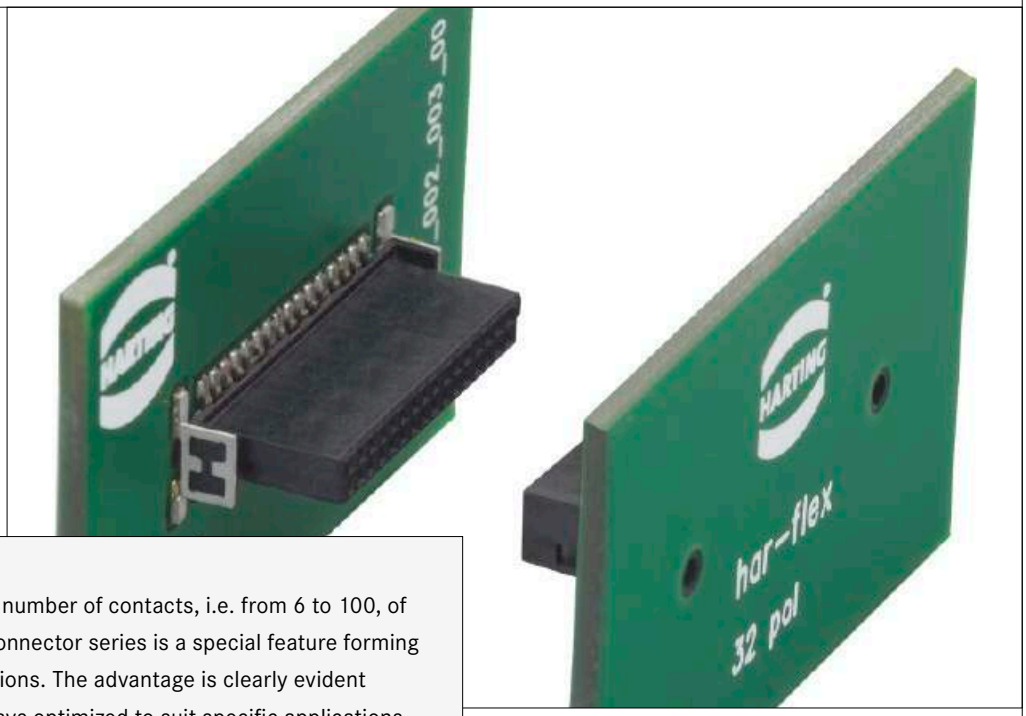

The continuous scalability by an even number of contacts, i.e. from 6 to 100, of the HARTING's *har*-flex® mezzanine connector series is a special feature forming an ideal basis for customized applications. The advantage is clearly evident considering that the connector is always optimized to suit specific applications on the device PCB, while also covering the medium- and small-scale volume range that is typical for the production of industrial devices.

Application profile:

CONNECTION TYPE		ENVIRONMENT		APPLICATION						
Board to Board	Cable/ Wire to Board	IP20	IP65 / IP67	Data	Signal	Power	high performance			
							Data transfer rate	Shielding	Number of contacts, contact density	Voltage, working current
●	●	●		●	●				●	

Cable termination

Han-Quick Lock®

IDC

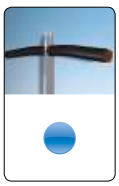

●

Crimp

Screw

Cage clamp

Axial screw

PCB termination

THT

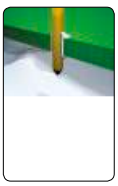

Press-in

SMC

SMT

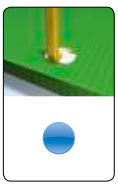

●

Application standard

SCSI

Housing integration

Separate housing

Integrated housing

Contents

	Page
*har*flex® connector system – introduction	**14.02**
Technical characteristics	**14.04**
Male connectors, straight	**14.08**
Female connectors, straight	**14.10**
Male connectors, angled	**14.12**
Female connectors, angled	**14.14**
Cable assemblies	**14.16**

har-flex® CONNECTORS

With *har*-flex®, HARTING has developed a general-purpose PCB connector series for internal and external Device Connectivity. The continuous scalability by an even number of contacts, i.e. from 6 to 100, of the HARTING's *har*-flex® mezzanine connector series is a special feature forming an ideal basis for customized applications. The advantage is clearly evident considering that the connector is always optimized to suit specific applications on the device PCB, while also covering the medium- and small-scale volume range that is typical for the production of industrial devices.

This flexibility is new – HARTING turns an individual design into a standard component. No special tooling changes are needed for customer-specific solutions, thus HARTING can realize a short delivery time.

PRODUCT DIVERSITY

The *har*-flex® product range with SMT termination technology is based on a 1.27 mm grid. With its diverse variants, HARTING provides connectivity solutions for many different board-to-board and cable-to-board applications. For example, two straight connectors are used for the mezzanine application, two angled connectors for PCBs on one level, and a combination allows the well-known pairing of mother and daughter cards. By using an IDC flat band cable, two PCBs with large space between can be connected.

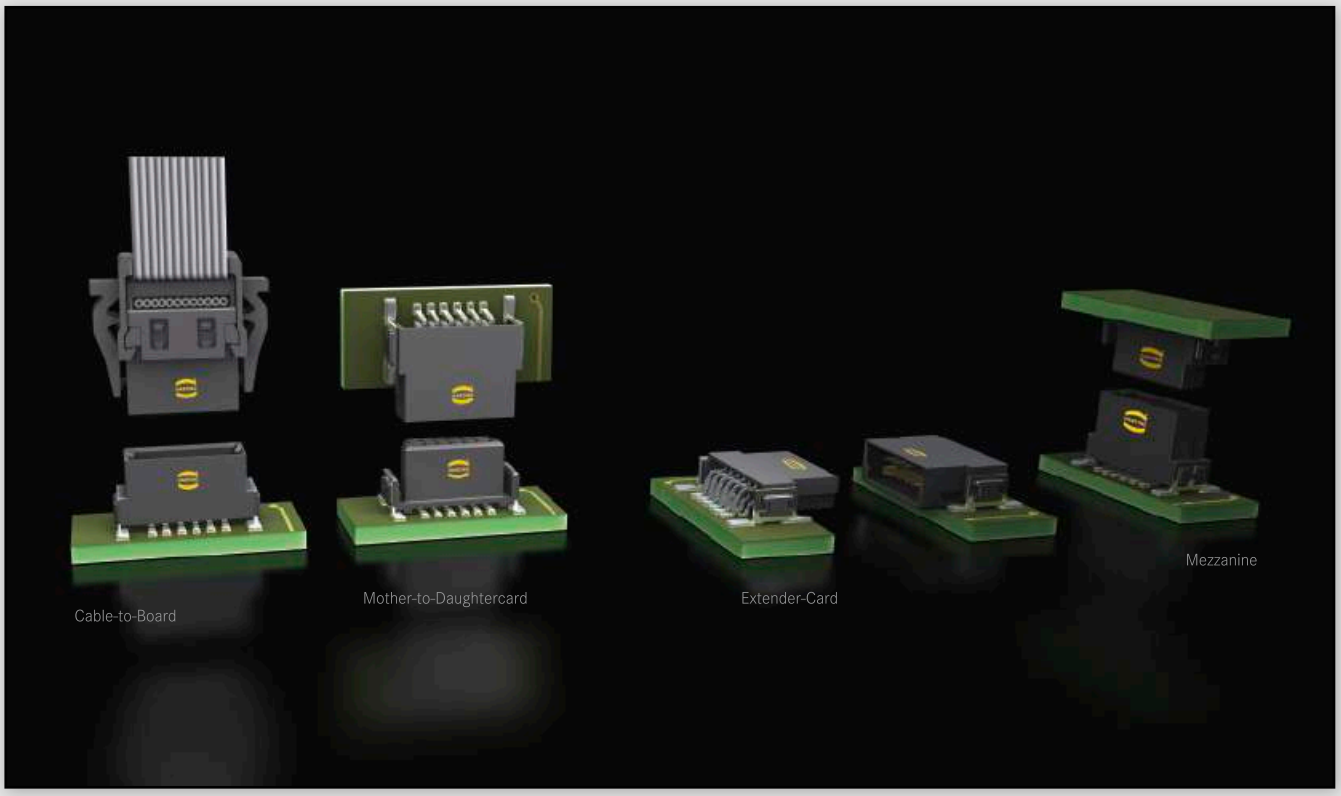

Specific features of the product range

Many pin count options
HARTING has developed a modular tooling concept which offers a broad choice of configurations between 6 and 100 poles in even numbered positions. This flexibility in the choice of number of contacts, combined with high density contact spacing, allow the designer to maximize the use of PCB real estate, thereby achieving overall space savings and cost efficiencies.

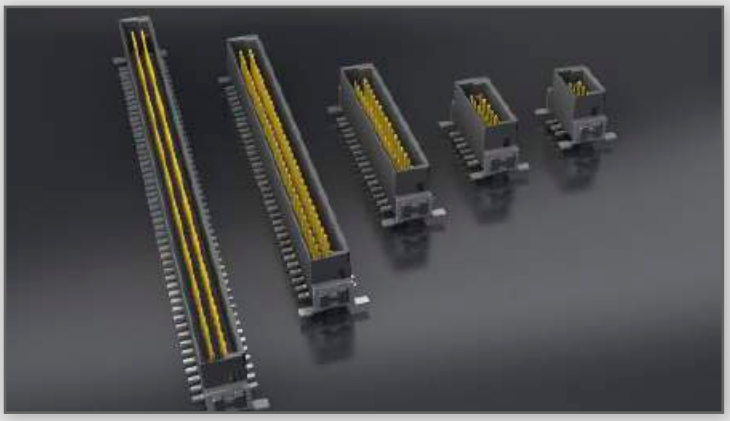

Flexible board-to-board distances
HARTING covers mezzanine applications with a range of straight versions for four different stacking heights that can be used to interconnect PCBs arranged in parallel stacks with spacing between 8.0 mm and 13.8 mm. Additional stacking heights are in development. For applications requiring larger spacing between boards HARTING offers compatible cable assemblies terminated with insulation displacement technology.

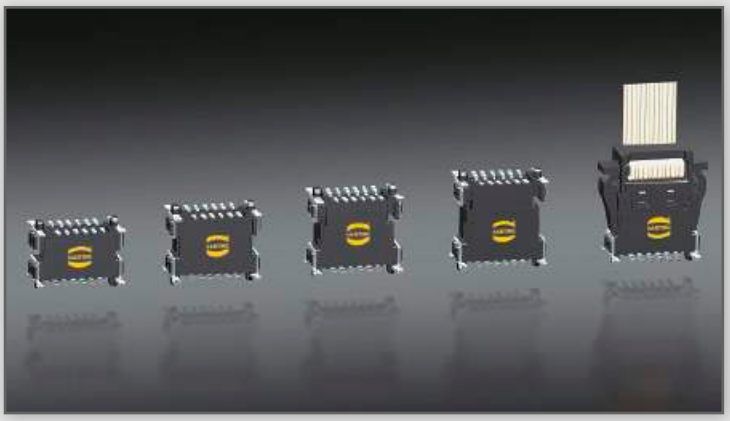

Robust design
The special SMT fixing ensures a robust and enduring connection to the PCB and helps to absorb mechanical stress on the solder contacts resulting from insertion and removal forces.

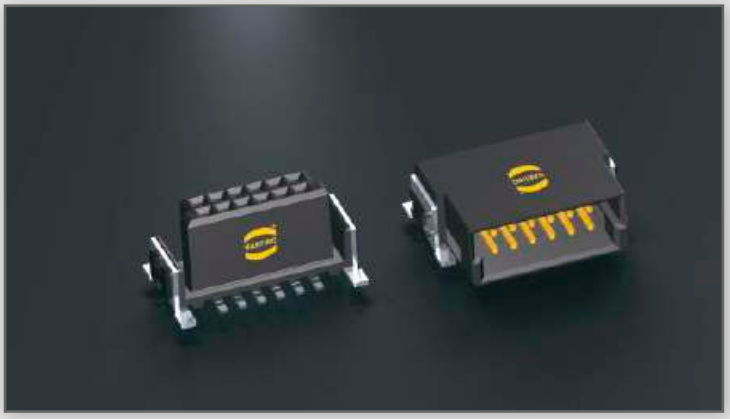

Automated processing features
The *har*-flex® SMT connectors meet the highest demands in terms of their processing capabilities. Special blister packaging provides protection during shipping and handling, while the “pick and place“ pads enable automated assembly of the PCBs. The temperature resistant materials of the insulating body, in combination with consistent testing of the coplanarity of contacts, ensure reliable soldering capabilities of the connectors in the reflow process.

Number of contacts	6, 8, 10 … 96, 98, 100
Connector pitch	1.27 mm x 1.27 mm [0.050'' x 0.050'']

Clearance and creepage distance

Board connectors (SMT)	min. 0.4 mm
Cable connectors (IDC)	
AWG 30/1 (solid)	min. 0.35 mm
AWG 30/7 (stranded)	min. 0.4 mm
Test voltage $U_{r.m.s.}$	500 V
Contact resistance	< 25 mΩ
Insulation resistance	> 10 GΩ
Insertion and withdrawal force	approx. 0.5 N / contact

Working temperature range

for connectors:	– 55 °C … + 125 °C
for flat cable assembly:	depends on cable type
The higher temperature limit includes the local ambient and heating effects of the contacts under load	
Temperature during reflow soldering (acc. to ECA/IPC/JEDEC J-STD-075 Level PSL R0)	min. 150 s > 217 °C min. 30 s > 240 °C

Electrical termination

Board connectors	SMT (Surface Mount Technology)
Cable connectors	IDC (Insulation Displacement Connection)

Materials

Moulding material	LCP
UL approval	UL 94-V0
CTI value (Comparative Tracking Index)	175
Contacts base material	Copper alloy
Contact surface	
Mating side	
Board connectors	Au over PdNi (acc. performance level)
Cable connectors	Au over PdNi (acc. performance level)
Termination side	
Board connectors (SMT)	Sn
Cable connectors (IDC)	Sn

Current carrying capacity acc. to IEC 60512-5-2

The current carrying capacity is limited by maximum temperature of materials for inserts and contacts including terminals.
The current capacity-curve is valid for continuous, not interrupted current-loaded contacts of connectors when simultaneous power on all contacts is given, without exceeding the maximum temperature.

Control and test procedures according to DIN IEC 60512-5-2.

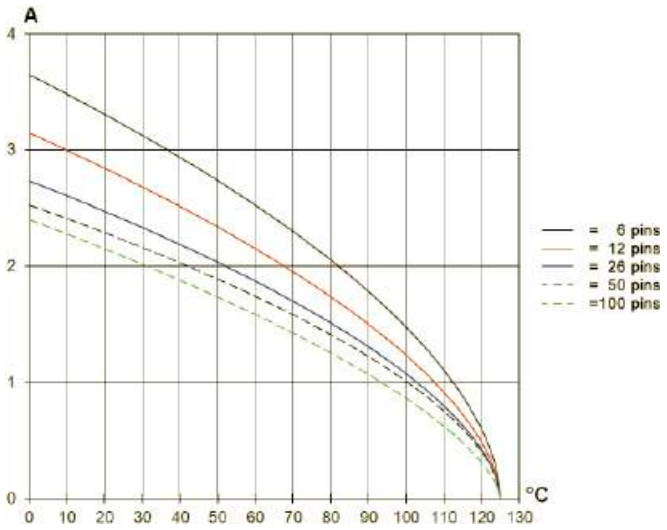

Derating curve at I_{max} * 0.8 (IEC 60512-5-2)

Durability

Performance level 1 (recommended for majority of applications)

Initial 250 mating cycles, 10 days gas test (25 °C/75 % r.h.) using H_2S 10 ppb, NO_2 200 ppb, CL_2 10 ppb, SO_2 200 ppb. Measurement of contact resistance. The remaining 250 mating cycles are subject to measurement of contact resistance and visual inspection. Visual inspection. No abrasion of the contact finish through to the base material. No functional impairment.

Part number definition: 15 . . . . . 2 . . . . . .

Performance level 2

Initial 125 mating cycles, 4 days gas test (25 °C/75% r.h.) using H_2S 10 ppb, NO_2 200 ppb, CL_2 10 ppb, SO_2 200 ppb. Measurement of contact resistance. The remaining 125 mating cycles are subject to measurement of contact resistance and visual inspection. Visual inspection. No abrasion of the contact finish through to the base material. No functional impairment.

Part number definition: 15 . . . . . 6 . . . . . .

Performance level S4

Defined contact surface of min. 0.06 µm Au over 0.7+0.2 µm PdNi.

Part number definition: 15 . . . . . 5 . . . . . .

Working voltage acc. to IEC 60 664-1

The working voltage depends on user specific operational conditions. Depending on the installation category, the degree of pollution and the entire electrical environment, the working voltage is different. The standard IEC 60 664-1 specifies, in general, the minimum insulation distances for equipment. But it can also be used to determine the maximum working voltage with given requirements.

The following table shows the most common conditions applicable for the *har*-flex® connectors and exemplary calculations for the working voltage. For installation category, degree of pollution and other requirements which are not shown in the table we refer to the IEC 60 664-1.

Clearance / Creepage distance	0.4 mm			
CTI-Value	< 400			
Isolation group	III a/b			
Electrical field type	Case A (Inhomogeneous field)		Case B (Homogeneous field)	
Installation category	I	II	I	II
Degree of pollution	1	1	1	1
Working voltage max.	**150 V**	**100 V**	**150 V**	**150 V**

Explanations:

– CTI value and isolation group are fixed values by the *har*-flex® connector characteristics.

– Installation category I: Equipment is intended for use only in appliances or installation parts, in which no overvoltages can occur. Equipment in this installation category in normally operated at extra low voltage.

– Installation category II: Equipment is intended for use in installations or parts of installations, in which lightning overvoltages need not be considered. Overvoltages caused by switching must be taken into account.

– Pollution degree 1: No pollution or only dry, non-conductive pollution occurs. The pollution has no influence.

– Pollution degree 2: Only non-conductive pollution occurs. A temporary conductive caused by condensation must be expected occasionally.

Part number definition

The *har*-flex® part numbers have 14 digits and are based on the following scheme:

1	5	X	X	X	X	X	X	X	X	X	X	X	X

15 *har*-flex® family

Connector style
11 straight male connector 1.75 mm stacking height
12 straight male connector 3.25 mm stacking height
15 angled male connector
21 straight female connector 6.25 mm stacking height
22 straight female connector 9.05 mm stacking height
25 angled female connector

Number of contacts

Durability
2 performance level 1
5 performance level S4
6 performance level 2

Termination
6 SMT termination

Counting number

Packaging
000 Tape and reel packaging
333 Samples

Stacking heights of straight connector versions

The *har*-flex® connectors cover mezzanine applications with a range of straight versions for four different stacking heights that can be used to interconnect PCBs arranged in parallel stacks with spacing between 8.0 mm and 13.8 mm.

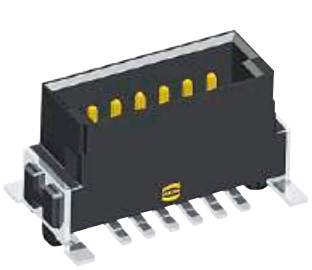

Male 1.75 mm

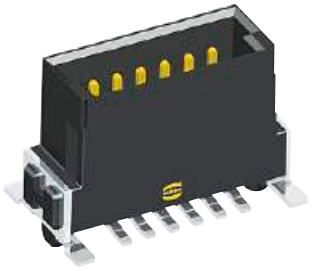

Male 3.25 mm

Female 6.25 mm

Female 9.05 mm

Due to the wiping lengths of 1.5 mm, these four connectors cover the distance of 8 mm to 13.8 mm continuously.

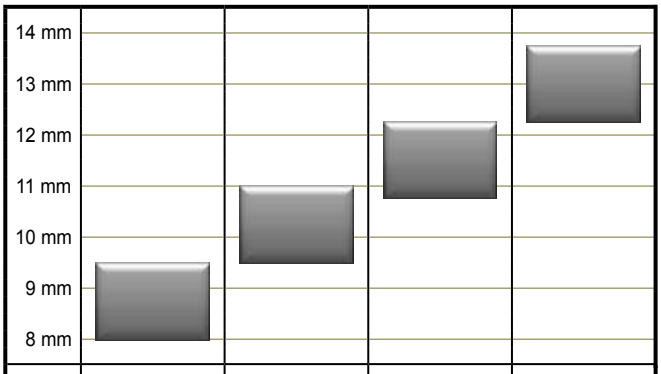

stacking heights	male 1.75 mm female 6.25 mm	male 3.25 mm female 6.25 mm	male 1.75 mm female 9.05 mm	male 3.25 mm female 9.05 mm
PCB distance	8 mm - 9.5 mm	9.5 mm - 11 mm	10.8 mm - 12.3 mm	12.3 mm - 13.8 mm
part numbers	15 11 ... 15 21 ...	15 12 ... 15 21 ...	15 11 ... 15 22 ...	15 12 ... 15 22 ...

Mating options

Mezzanine connection

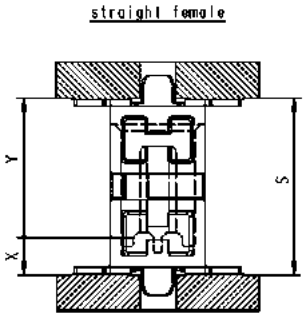

3.25	9.05	12.3	13.8
1.75	9.05	10.8	12.3
3.25	6.25	9.5	11
1.75	6.25	8	9.5
X	Y	Smin	* Smax

* Smax = Smin + 1,5 wiping length with additional contact overlap security

Extender Card connection

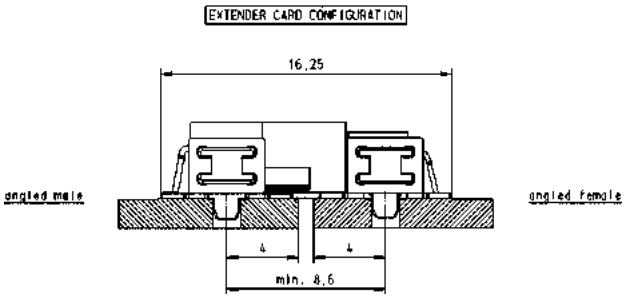

Mother-to-Daughtercard connection

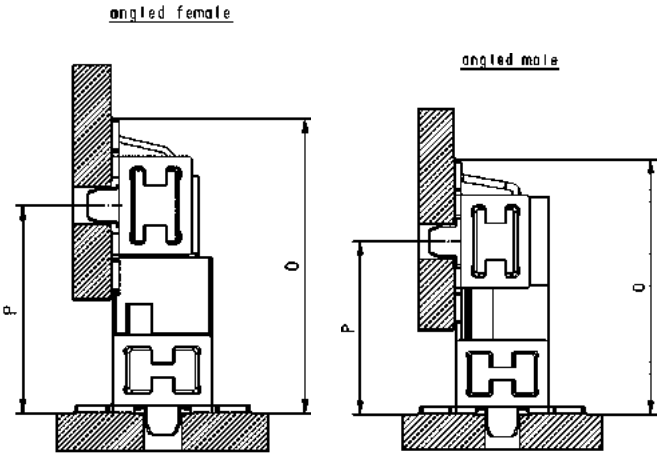

3.25	10.25	14.08
1.75	8.75	12.58
X	P min.	O

9.05	10.5	14.33
6.25	7.7	11.53
Y	P min.	O

Mating conditions

Inclination

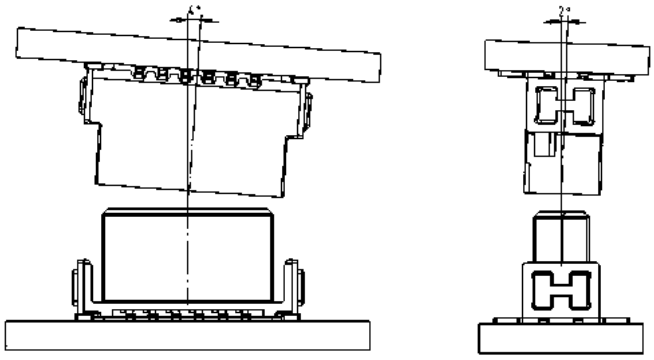

Mismating

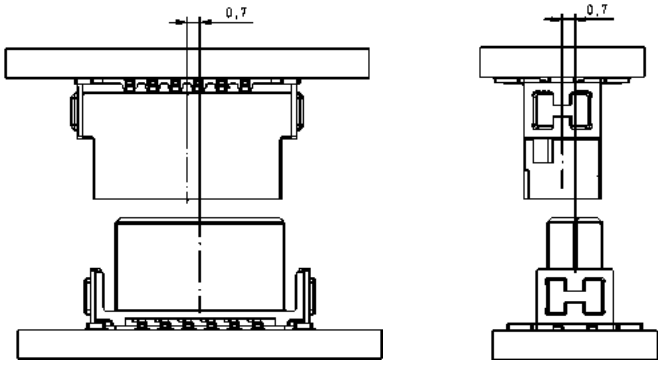

Tape acc. to IEC 60286-3

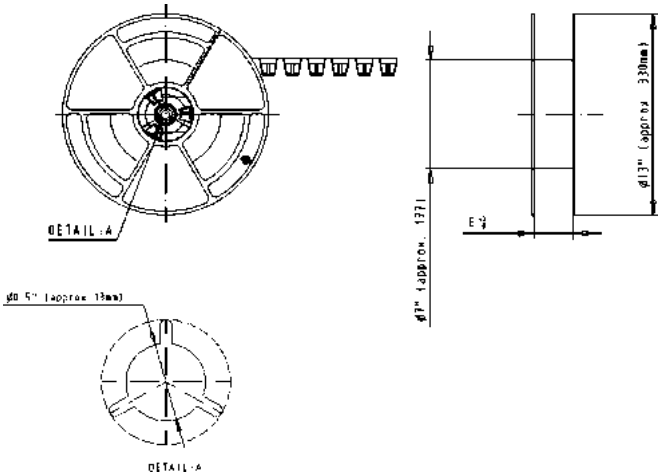

Tape dimensions:	E
poles 6 to 12	24.4
poles 14 to 20	32.4
poles 22 to 40	44.4
poles 42 to 56	56.4
poles 58 to 80	72.4
poles 82 to 100	88.4

SMT processing notes

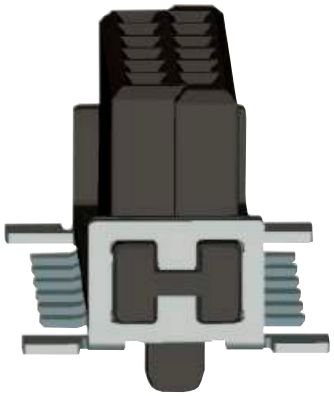

The *har*-flex® SMT connectors meet the highest demands in terms of their processing capabilities.

The connectors are delivered in a tape and reel packaging optimized for automatic assembly machines. A vacuum cover enables the automatic assembly with a vacuum nozzle.

The insulation body material is high temperature resistant, and due to the black colour a secure camera recognition is ensured.

For a reliable SMT solder process, the termination pins are 100 % checked for coplanarity.

Process / Moisture Sensitivity

During the reflow solder process, the connector has to resist extreme variations in temperature. Connectors consist in general of both plastic and metal parts, which have a different behaviour during the solder process. The Process Sensivity and also the Moisture Sensivity are tested according the ECA/IPC/JEDEC J-STD-075 specification.

Process Sensivity:

PSL means Process Sensitivity Level. PSL is a rating used to identify a component that is solder process sensitive. Damages of the connector after three times soldering are not permitted (e.g. melted edges).

Moisture Sensitivity:

MSL means Moisture Sensitivity Level. MSL is a rating indicating a component's susceptibility to damage due to absorbed moisture during storage. Damages of the connector after storage in damp heat and three times soldering are not permitted (e.g. blisters).

The *har*-flex® connectors are rated with **PSL R0** and **MSL 1**. This is the maximum possible rating in both categories. The *har*-flex® connector resists three times soldering at the following conditions without damages:

- min. 150 s beyond 217 °C (liquidus temperature, the melting point of the solder paste)
- min. 30 s beyond classification temperature (240 °C / 245 °C for *har*-flex®)
- Temperature solder profile according to ECA/IPC/JEDEC J-STD-075
- For MSL test, a storage of 168 hours at 85 °C and 85 % rel. humidity was carried out

As the result, the *har*-flex® connectors are not process sensitive and not moisture sensitive according to ECA/IPC/JEDEC J-STD-075.

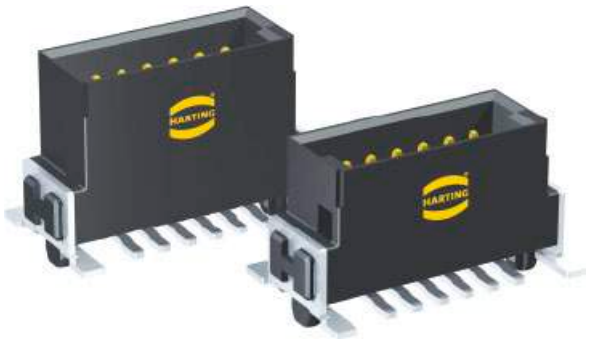

Male connectors, straight

Identification	No. of contacts	Part number	Dimensions in mm

Male connector, straight, stacking heights 1.75 / 3.25 mm

No. of contacts	Part number
6	15 1 . 006 . 601 . . .
8	15 1 . 008 . 601 . . .
10	15 1 . 010 . 601 . . .
12	15 1 . 012 . 601 . . .
14	15 1 . 014 . 601 . . .
16	15 1 . 016 . 601 . . .
18	15 1 . 018 . 601 . . .
20	15 1 . 020 . 601 . . .
22	15 1 . 022 . 601 . . .
24	15 1 . 024 . 601 . . .
26	15 1 . 026 . 601 . . .
28	15 1 . 028 . 601 . . .
30	15 1 . 030 . 601 . . .
32	15 1 . 032 . 601 . . .
34	15 1 . 034 . 601 . . .
36	15 1 . 036 . 601 . . .
38	15 1 . 038 . 601 . . .
40	15 1 . 040 . 601 . . .
42	15 1 . 042 . 601 . . .
44	15 1 . 044 . 601 . . .
46	15 1 . 046 . 601 . . .
48	15 1 . 048 . 601 . . .
50	15 1 . 050 . 601 . . .
52	15 1 . 052 . 601 . . .
54	15 1 . 054 . 601 . . .
56	15 1 . 056 . 601 . . .
58	15 1 . 058 . 601 . . .
60	15 1 . 060 . 601 . . .
62	15 1 . 062 . 601 . . .
64	15 1 . 064 . 601 . . .
66	15 1 . 066 . 601 . . .
68	15 1 . 068 . 601 . . .
70	15 1 . 070 . 601 . . .
72	15 1 . 072 . 601 . . .
74	15 1 . 074 . 601 . . .
76	15 1 . 076 . 601 . . .
78	15 1 . 078 . 601 . . .
80	15 1 . 080 . 601 . . .
82	15 1 . 082 . 601 . . .
84	15 1 . 084 . 601 . . .
86	15 1 . 086 . 601 . . .
88	15 1 . 088 . 601 . . .
90	15 1 . 090 . 601 . . .
92	15 1 . 092 . 601 . . .
94	15 1 . 094 . 601 . . .
96	15 1 . 096 . 601 . . .
98	15 1 . 098 . 601 . . .
100	15 1 . 100 . 601 . . .

Please insert digit for stacking height

1.75 mm ▶ 1
3.25 mm ▶ 2

A	B	C	D	E	F	G
2.54	6.96	8.89	5.76	4.76	6.56	1.05
3.81	8.23	10.16	7.03	6.03	7.83	1.69
5.08	9.50	11.43	8.30	7.30	9.10	2.32
6.35	10.77	12.70	9.57	8.57	10.37	2.96
7.62	12.04	13.97	10.84	9.84	11.64	3.59
8.89	13.31	15.24	12.11	11.11	12.91	4.23
10.16	14.58	16.51	13.38	12.38	14.18	4.48
11.43	15.85	17.78	14.65	13.65	15.45	5.50
12.70	17.12	19.05	15.92	14.92	16.72	6.13
13.97	18.39	20.32	17.19	16.19	17.99	6.77
15.24	19.66	21.59	18.46	17.46	19.26	7.40
16.51	20.93	22.86	19.73	18.73	20.53	8.04
17.78	22.20	24.13	21.00	20.00	21.80	8.67
19.05	23.47	25.40	22.27	21.27	23.07	9.31
20.32	24.74	26.67	23.54	22.54	24.34	9.94
21.59	26.01	27.94	24.81	23.81	25.61	10.58
22.86	27.28	29.21	26.08	25.08	26.88	11.21
24.13	28.55	30.48	27.35	26.35	28.15	11.85
25.40	29.82	31.75	28.62	27.62	29.42	12.48
26.67	31.09	33.02	29.89	28.89	30.69	13.12
27.94	32.36	34.29	31.16	30.16	31.96	13.75
29.21	33.63	35.56	32.43	31.43	33.23	14.39
30.48	34.90	36.83	33.70	32.70	34.50	15.02
31.75	36.17	38.10	34.97	33.97	35.77	15.66
33.02	37.44	39.37	36.24	35.24	37.04	16.29
34.29	38.71	40.64	37.51	36.51	38.31	16.93
35.56	39.98	41.91	38.78	37.78	39.58	17.56
36.83	41.25	43.18	40.05	39.05	40.85	18.20
38.10	42.52	44.45	41.32	40.32	42.12	18.83
39.37	43.79	45.72	42.59	41.59	43.39	19.47
40.64	45.06	46.99	43.86	42.86	44.66	20.10
41.91	46.33	48.26	45.13	44.13	45.93	20.74
43.18	47.60	49.53	46.40	45.40	47.20	21.37
44.45	48.87	50.80	47.67	46.67	48.47	22.01
45.72	50.14	52.07	48.94	47.94	49.74	22.64
46.99	51.41	53.34	50.21	49.21	51.01	23.28
48.26	52.68	54.61	51.48	50.48	52.28	23.91
49.53	53.95	55.88	52.75	51.75	53.55	24.55
50.80	55.22	57.15	54.02	53.02	54.82	25.18
52.07	56.49	58.42	55.29	54.29	56.09	25.82
53.34	57.76	59.69	56.56	55.56	57.36	26.45
54.61	59.03	60.96	57.83	56.83	58.63	27.09
55.88	60.30	62.23	59.10	58.10	59.90	27.72
57.15	61.57	63.50	60.37	59.37	61.17	28.36
58.42	62.84	64.77	61.64	60.64	62.44	28.99
59.69	64.11	66.04	62.91	61.91	63.71	29.63
60.96	65.38	67.31	64.18	63.18	64.98	30.26
62.23	66.65	68.58	65.45	64.45	66.25	30.90

for performance level 1
for performance level S4
for performance level 2
2
5
6

333
000
for samples
for 280 pieces on reel

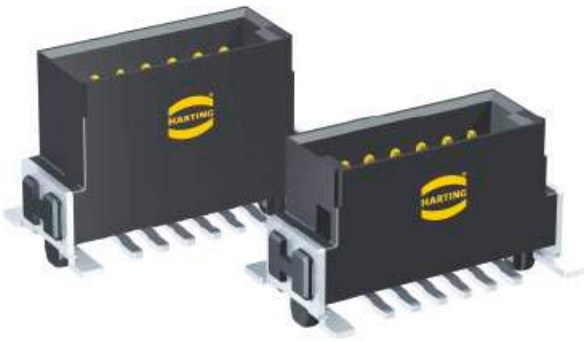

Male connectors, straight

Identification	Drawing	Dimensions in mm

Dimensions

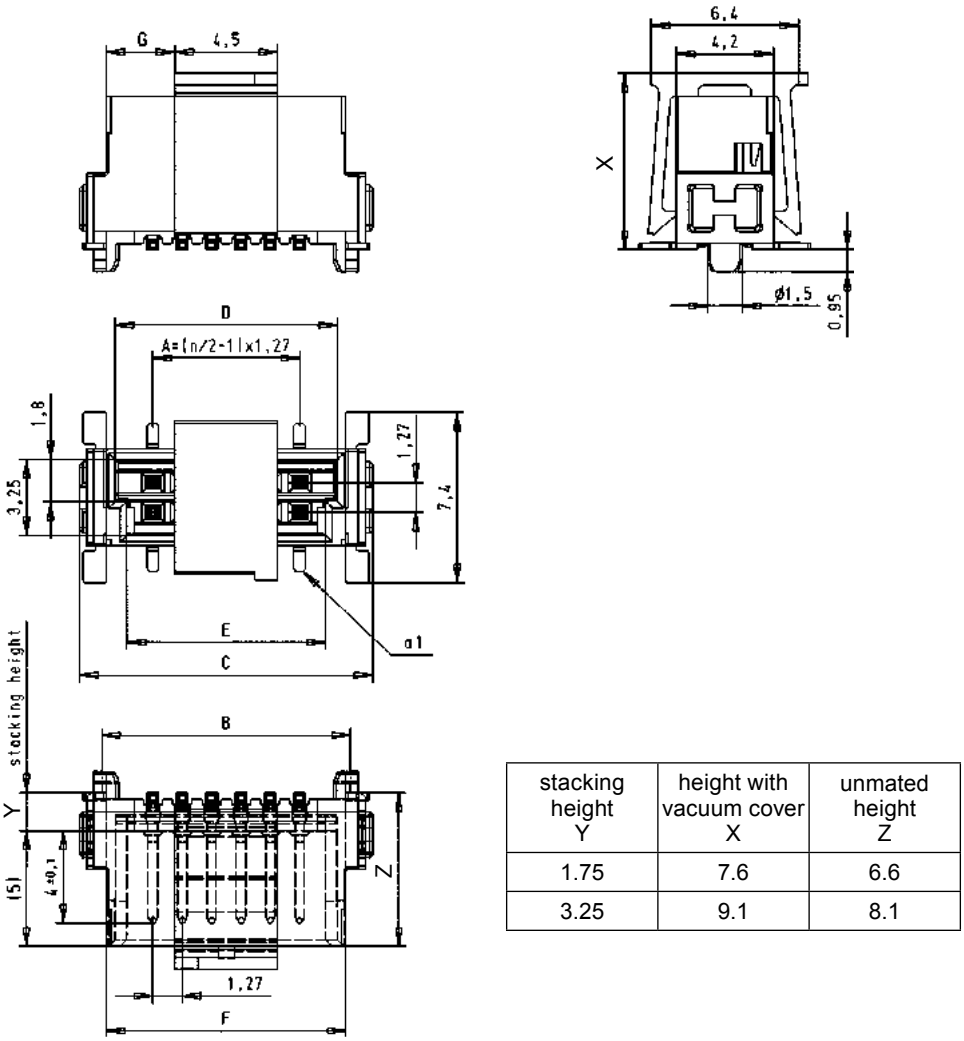

stacking height Y	height with vacuum cover X	unmated height Z
1.75	7.6	6.6
3.25	9.1	8.1

PCB layout

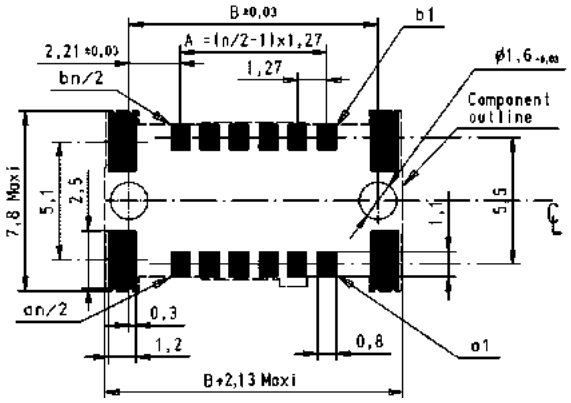

Female connectors, straight

Identification	No. of contacts	Part number	Dimensions in mm

Female connector, straight, stacking heights 6.25 / 9.05 mm

No. of contacts	Part number
6	15 2 . 006 . 601 . . .
8	15 2 . 008 . 601 . . .
10	15 2 . 010 . 601 . . .
12	15 2 . 012 . 601 . . .
14	15 2 . 014 . 601 . . .
16	15 2 . 016 . 601 . . .
18	15 2 . 018 . 601 . . .
20	15 2 . 020 . 601 . . .
22	15 2 . 022 . 601 . . .
24	15 2 . 024 . 601 . . .
26	15 2 . 026 . 601 . . .
28	15 2 . 028 . 601 . . .
30	15 2 . 030 . 601 . . .
32	15 2 . 032 . 601 . . .
34	15 2 . 034 . 601 . . .
36	15 2 . 036 . 601 . . .
38	15 2 . 038 . 601 . . .
40	15 2 . 040 . 601 . . .
42	15 2 . 042 . 601 . . .
44	15 2 . 044 . 601 . . .
46	15 2 . 046 . 601 . . .
48	15 2 . 048 . 601 . . .
50	15 2 . 050 . 601 . . .
52	15 2 . 052 . 601 . . .
54	15 2 . 054 . 601 . . .
56	15 2 . 056 . 601 . . .
58	15 2 . 058 . 601 . . .
60	15 2 . 060 . 601 . . .
62	15 2 . 062 . 601 . . .
64	15 2 . 064 . 601 . . .
66	15 2 . 066 . 601 . . .
68	15 2 . 068 . 601 . . .
70	15 2 . 070 . 601 . . .
72	15 2 . 072 . 601 . . .
74	15 2 . 074 . 601 . . .
76	15 2 . 076 . 601 . . .
78	15 2 . 078 . 601 . . .
80	15 2 . 080 . 601 . . .
82	15 2 . 082 . 601 . . .
84	15 2 . 084 . 601 . . .
86	15 2 . 086 . 601 . . .
88	15 2 . 088 . 601 . . .
90	15 2 . 090 . 601 . . .
92	15 2 . 092 . 601 . . .
94	15 2 . 094 . 601 . . .
96	15 2 . 096 . 601 . . .
98	15 2 . 098 . 601 . . .
100	15 2 . 100 . 601 . . .

Please insert digit for stacking height

6.25 mm ▶ 1
9.05 mm ▶ 2

A	B	C	D	E	G
2.54	6.96	8.89	5.56	4.56	1.19
3.81	8.23	10.16	6.83	5.83	1.19
5.08	9.50	11.43	8.10	7.10	2.46
6.35	10.77	12.70	9.37	8.37	2.46
7.62	12.04	13.97	10.64	9.64	3.73
8.89	13.31	15.24	11.91	10.91	3.73
10.16	14.58	16.51	13.18	12.18	5.00
11.43	15.85	17.78	14.45	13.45	5.00
12.70	17.12	19.05	15.72	14.72	6.27
13.97	18.39	20.32	16.99	15.99	6.27
15.24	19.66	21.59	18.26	17.26	7.54
16.51	20.93	22.86	19.53	18.53	7.54
17.78	22.20	24.13	20.80	19.80	8.81
19.05	23.47	25.40	22.07	21.07	8.81
20.32	24.74	26.67	23.34	22.34	10.08
21.59	26.01	27.94	24.61	23.61	10.08
22.86	27.28	29.21	25.88	24.88	11.35
24.13	28.55	30.48	27.15	26.15	11.35
25.40	29.82	31.75	28.42	27.42	12.62
26.67	31.09	33.02	29.69	28.69	12.62
27.94	32.36	34.29	30.96	29.96	13.89
29.21	33.63	35.56	32.23	31.23	13.89
30.48	34.90	36.83	33.50	32.50	15.16
31.75	36.17	38.10	34.77	33.77	15.16
33.02	37.44	39.37	36.04	35.04	16.43
34.29	38.71	40.64	37.31	36.31	16.43
35.56	39.98	41.91	38.58	37.58	17.70
36.83	41.25	43.18	39.85	38.85	17.70
38.10	42.52	44.45	41.12	40.12	18.97
39.37	43.79	45.72	42.39	41.39	18.97
40.64	45.06	46.99	43.66	42.66	20.24
41.91	46.33	48.26	44.93	43.93	20.24
43.18	47.60	49.53	46.20	45.20	21.51
44.45	48.87	50.80	47.47	46.47	21.51
45.72	50.14	52.07	48.74	47.74	22.78
46.99	51.41	53.34	50.01	49.01	22.78
48.26	52.68	54.61	51.28	50.28	24.05
49.53	53.95	55.88	52.55	51.55	24.05
50.80	55.22	57.15	53.82	52.82	25.32
52.07	56.49	58.42	55.09	54.09	25.32
53.34	57.76	59.69	56.36	55.36	26.59
54.61	59.03	60.96	57.63	56.63	26.59
55.88	60.30	62.23	58.90	57.90	27.86
57.15	61.57	63.50	60.17	59.17	27.86
58.42	62.84	64.77	61.44	60.44	29.13
59.69	64.11	66.04	62.71	61.71	29.13
60.96	65.38	67.31	63.98	62.98	30.40
62.23	66.65	68.58	65.25	64.25	30.40

for performance level 1
for performance level S4
for performance level 2
2
5
6

333
000
for samples
for 280 pieces on reel

Female connectors, straight

Identification	Drawing	Dimensions in mm

Dimensions

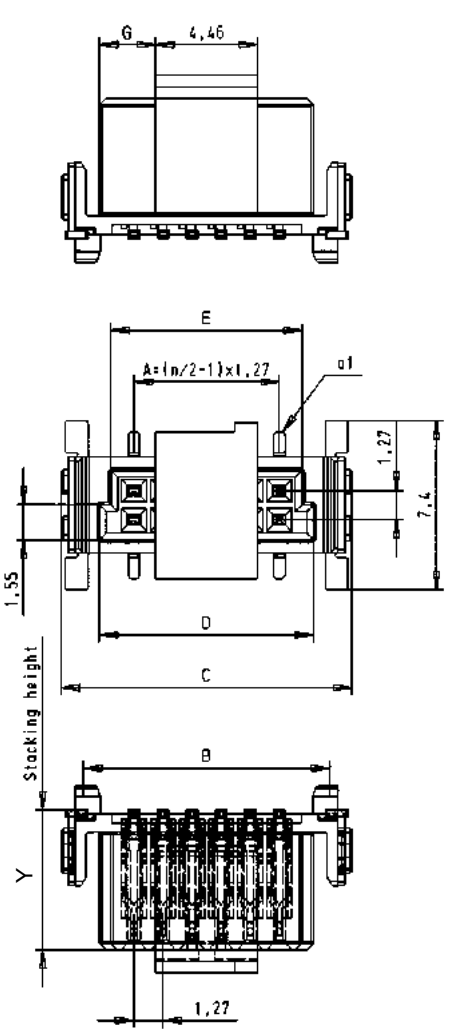

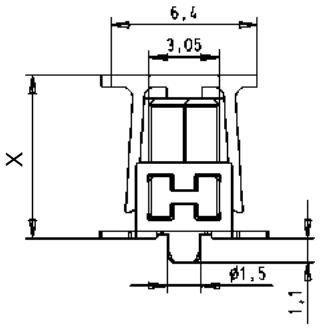

stacking height Y	height with vacuum cover X
6.25	7.1
9.05	9.9

PCB layout

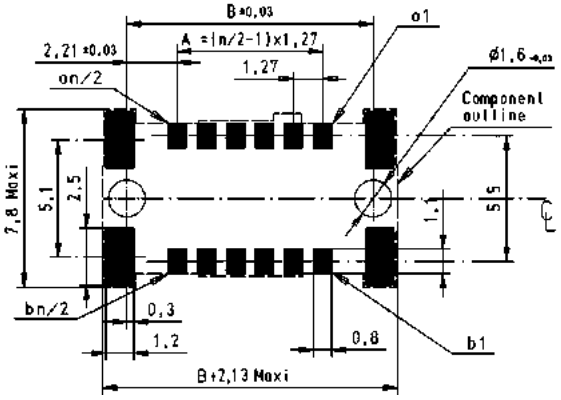

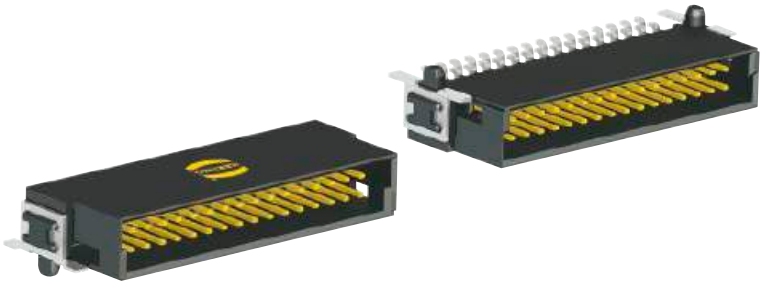

Male connectors, angled

Identification	No. of contacts	Part number	Dimensions in mm

A	B	C	D	E
2.54	6.96	8.89	5.76	4.76
3.81	8.23	10.16	7.03	6.03
5.08	9.50	11.43	8.30	7.30
6.35	10.77	12.70	9.57	8.57
7.62	12.04	13.97	10.84	9.84
8.89	13.31	15.24	12.11	11.11
10.16	14.58	16.51	13.38	12.38
11.43	15.85	17.78	14.65	13.65
12.70	17.12	19.05	15.92	14.92
13.97	18.39	20.32	17.19	16.19
15.24	19.66	21.59	18.46	17.46
16.51	20.93	22.86	19.73	18.73
17.78	22.20	24.13	21.00	20.00
19.05	23.47	25.40	22.27	21.27
20.32	24.74	26.67	23.54	22.54
21.59	26.01	27.94	24.81	23.81
22.86	27.28	29.21	26.08	25.08
24.13	28.55	30.48	27.35	26.35
25.40	29.82	31.75	28.62	27.62
26.67	31.09	33.02	29.89	28.89
27.94	32.36	34.29	31.16	30.16
29.21	33.63	35.56	32.43	31.43
30.48	34.90	36.83	33.70	32.70
31.75	36.17	38.10	34.97	33.97
33.02	37.44	39.37	36.24	35.24
34.29	38.71	40.64	37.51	36.51
35.56	39.98	41.91	38.78	37.78
36.83	41.25	43.18	40.05	39.05
38.10	42.52	44.45	41.32	40.32
39.37	43.79	45.72	42.59	41.59
40.64	45.06	46.99	43.86	42.86
41.91	46.33	48.26	45.13	44.13
43.18	47.60	49.53	46.40	45.40
44.45	48.87	50.80	47.67	46.67
45.72	50.14	52.07	48.94	47.94
46.99	51.41	53.34	50.21	49.21
48.26	52.68	54.61	51.48	50.48
49.53	53.95	55.88	52.75	51.75
50.80	55.22	57.15	54.02	53.02
52.07	56.49	58.42	55.29	54.29
53.34	57.76	59.69	56.56	55.56
54.61	59.03	60.96	57.83	56.83
55.88	60.30	62.23	59.10	58.10
57.15	61.57	63.50	60.37	59.37
58.42	62.84	64.77	61.64	60.64
59.69	64.11	66.04	62.91	61.91
60.96	65.38	67.31	64.18	63.18
62.23	66.65	68.58	65.45	64.45

Male connector, angled

No. of contacts	Part number
6	15 15 006 . 601 . . .
8	15 15 008 . 601 . . .
10	15 15 010 . 601 . . .
12	15 15 012 . 601 . . .
14	15 15 014 . 601 . . .
16	15 15 016 . 601 . . .
18	15 15 018 . 601 . . .
20	15 15 020 . 601 . . .
22	15 15 022 . 601 . . .
24	15 15 024 . 601 . . .
26	15 15 026 . 601 . . .
28	15 15 028 . 601 . . .
30	15 15 030 . 601 . . .
32	15 15 032 . 601 . . .
34	15 15 034 . 601 . . .
36	15 15 036 . 601 . . .
38	15 15 038 . 601 . . .
40	15 15 040 . 601 . . .
42	15 15 042 . 601 . . .
44	15 15 044 . 601 . . .
46	15 15 046 . 601 . . .
48	15 15 048 . 601 . . .
50	15 15 050 . 601 . . .
52	15 15 052 . 601 . . .
54	15 15 054 . 601 . . .
56	15 15 056 . 601 . . .
58	15 15 058 . 601 . . .
60	15 15 060 . 601 . . .
62	15 15 062 . 601 . . .
64	15 15 064 . 601 . . .
66	15 15 066 . 601 . . .
68	15 15 068 . 601 . . .
70	15 15 070 . 601 . . .
72	15 15 072 . 601 . . .
74	15 15 074 . 601 . . .
76	15 15 076 . 601 . . .
78	15 15 078 . 601 . . .
80	15 15 080 . 601 . . .
82	15 15 082 . 601 . . .
84	15 15 084 . 601 . . .
86	15 15 086 . 601 . . .
88	15 15 088 . 601 . . .
90	15 15 090 . 601 . . .
92	15 15 092 . 601 . . .
94	15 15 094 . 601 . . .
96	15 15 096 . 601 . . .
98	15 15 098 . 601 . . .
100	15 15 100 . 601 . . .

for performance level 1
for performance level S4
for performance level 2

2
5
6

333
000

for samples
for 560 pieces on reel

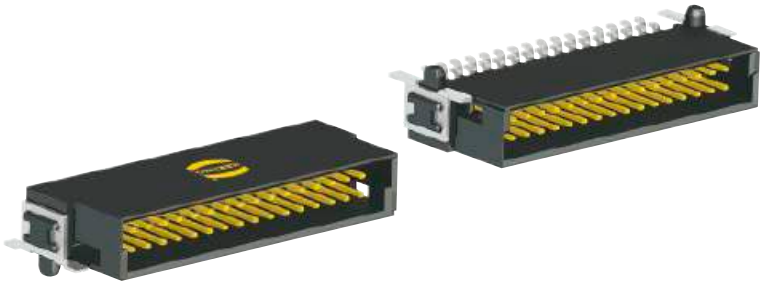

Male connectors, angled

Identification	Drawing	Dimensions in mm
Dimensions	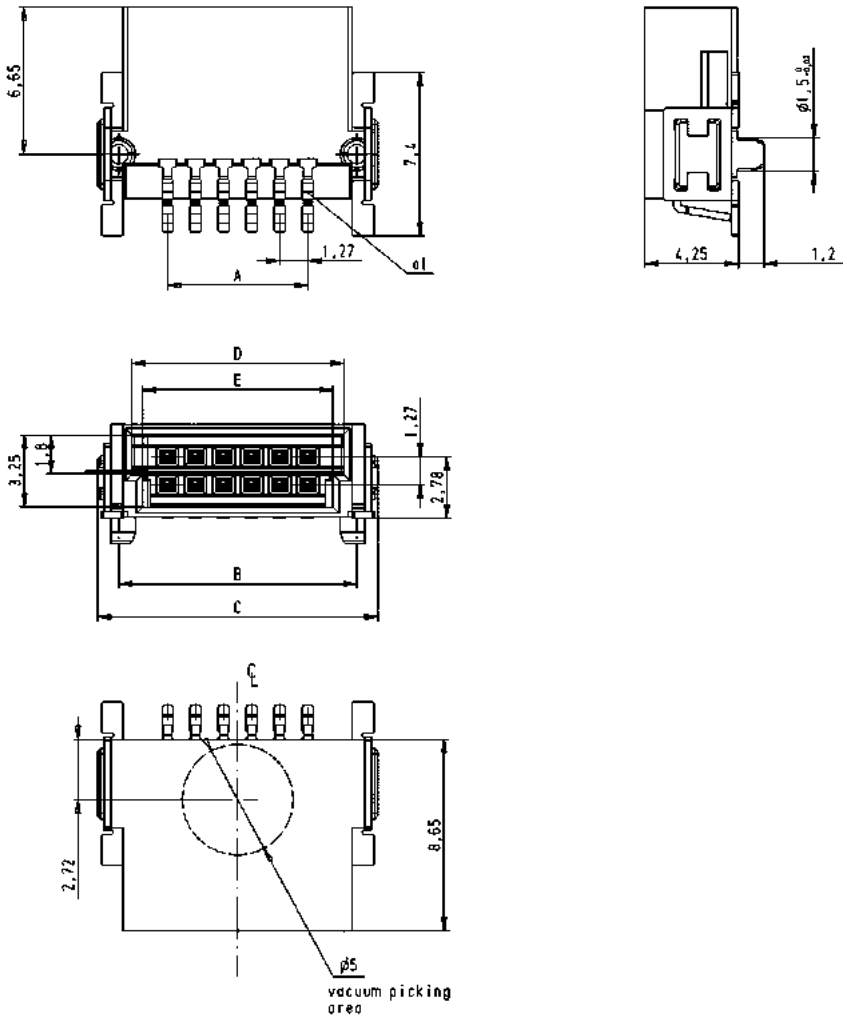	
PCB layout	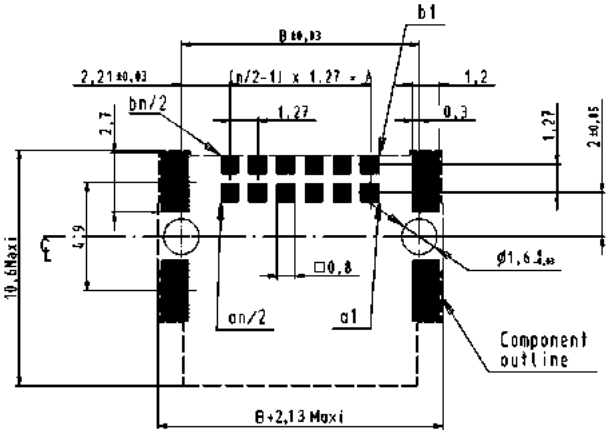	

Female connectors, angled

Identification	No. of contacts	Part number	Dimensions in mm

Female connector, angled

No. of contacts	Part number
6	15 25 006 . 601 . . .
8	15 25 008 . 601 . . .
10	15 25 010 . 601 . . .
12	15 25 012 . 601 . . .
14	15 25 014 . 601 . . .
16	15 25 016 . 601 . . .
18	15 25 018 . 601 . . .
20	15 25 020 . 601 . . .
22	15 25 022 . 601 . . .
24	15 25 024 . 601 . . .
26	15 25 026 . 601 . . .
28	15 25 028 . 601 . . .
30	15 25 030 . 601 . . .
32	15 25 032 . 601 . . .
34	15 25 034 . 601 . . .
36	15 25 036 . 601 . . .
38	15 25 038 . 601 . . .
40	15 25 040 . 601 . . .
42	15 25 042 . 601 . . .
44	15 25 044 . 601 . . .
46	15 25 046 . 601 . . .
48	15 25 048 . 601 . . .
50	15 25 050 . 601 . . .
52	15 25 052 . 601 . . .
54	15 25 054 . 601 . . .
56	15 25 056 . 601 . . .
58	15 25 058 . 601 . . .
60	15 25 060 . 601 . . .
62	15 25 062 . 601 . . .
64	15 25 064 . 601 . . .
66	15 25 066 . 601 . . .
68	15 25 068 . 601 . . .
70	15 25 070 . 601 . . .
72	15 25 072 . 601 . . .
74	15 25 074 . 601 . . .
76	15 25 076 . 601 . . .
78	15 25 078 . 601 . . .
80	15 25 080 . 601 . . .
82	15 25 082 . 601 . . .
84	15 25 084 . 601 . . .
86	15 25 086 . 601 . . .
88	15 25 088 . 601 . . .
90	15 25 090 . 601 . . .
92	15 25 092 . 601 . . .
94	15 25 094 . 601 . . .
96	15 25 096 . 601 . . .
98	15 25 098 . 601 . . .
100	15 25 100 . 601 . . .

A	B	C	D	E
2.54	6.96	8.89	5.56	4.56
3.81	8.23	10.16	6.83	5.83
5.08	9.50	11.43	8.10	7.10
6.35	10.77	12.70	9.37	8.37
7.62	12.04	13.97	10.64	9.64
8.89	13.31	15.24	11.91	10.91
10.16	14.58	16.51	13.18	12.18
11.43	15.85	17.78	14.45	13.45
12.70	17.12	19.05	15.72	14.72
13.97	18.39	20.32	16.99	15.99
15.24	19.66	21.59	18.26	17.26
16.51	20.93	22.86	19.53	18.53
17.78	22.20	24.13	20.80	19.80
19.05	23.47	25.40	22.07	21.07
20.32	24.74	26.67	23.34	22.34
21.59	26.01	27.94	24.61	23.61
22.86	27.28	29.21	25.88	24.88
24.13	28.55	30.48	27.15	26.15
25.40	29.82	31.75	28.42	27.42
26.67	31.09	33.02	29.69	28.69
27.94	32.36	34.29	30.96	29.96
29.21	33.63	35.56	32.23	31.23
30.48	34.90	36.83	33.50	32.50
31.75	36.17	38.10	34.77	33.77
33.02	37.44	39.37	36.04	35.04
34.29	38.71	40.64	37.31	36.31
35.56	39.98	41.91	38.58	37.58
36.83	41.25	43.18	39.85	38.85
38.10	42.52	44.45	41.12	40.12
39.37	43.79	45.72	42.39	41.39
40.64	45.06	46.99	43.66	42.66
41.91	46.33	48.26	44.93	43.93
43.18	47.60	49.53	46.20	45.20
44.45	48.87	50.80	47.47	46.47
45.72	50.14	52.07	48.74	47.74
46.99	51.41	53.34	50.01	49.01
48.26	52.68	54.61	51.28	50.28
49.53	53.95	55.88	52.55	51.55
50.80	55.22	57.15	53.82	52.82
52.07	56.49	58.42	55.09	54.09
53.34	57.76	59.69	56.36	55.36
54.61	59.03	60.96	57.63	56.63
55.88	60.30	62.23	58.90	57.90
57.15	61.57	63.50	60.17	59.17
58.42	62.84	64.77	61.44	60.44
59.69	64.11	66.04	62.71	61.71
60.96	65.38	67.31	63.98	62.98
62.23	66.65	68.58	65.25	64.25

for performance level 1
for performance level S4
for performance level 2

2
5
6

333
000

for samples
for 560 pieces on reel

Female connectors, angled

Identification	Drawing	Dimensions in mm

Dimensions

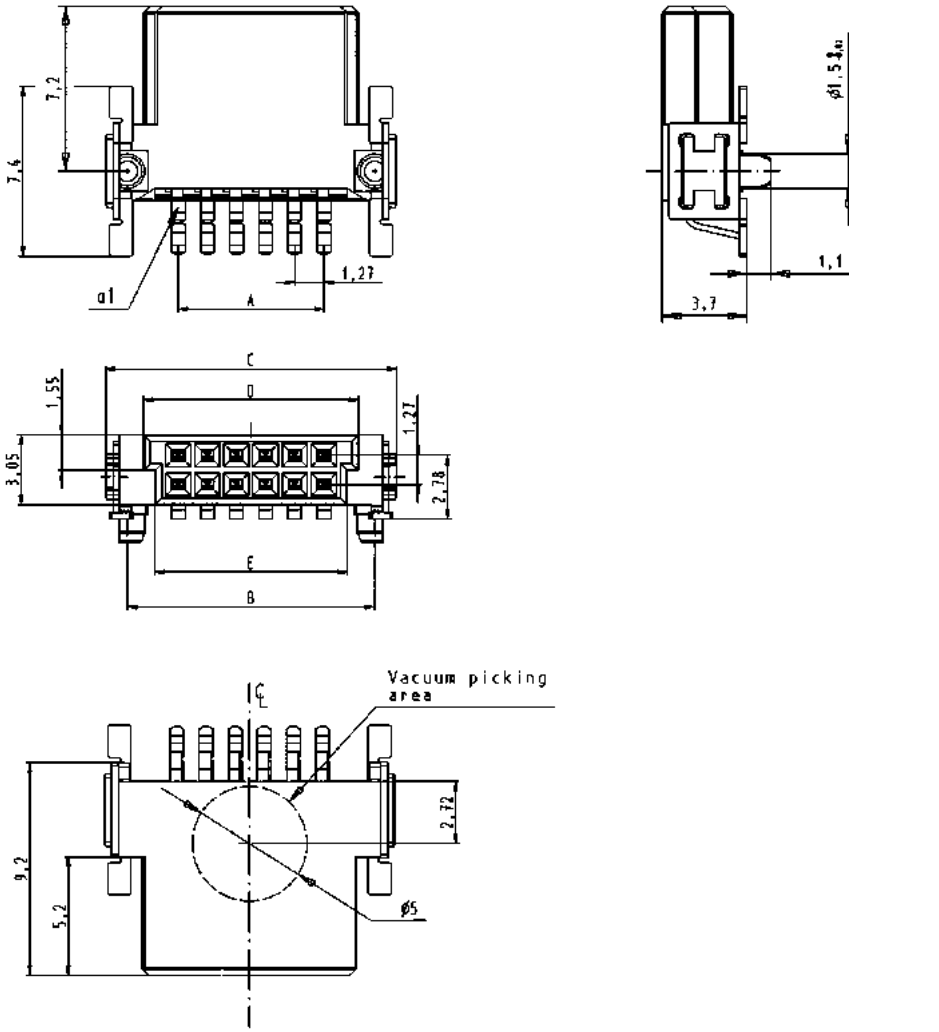

PCB layout

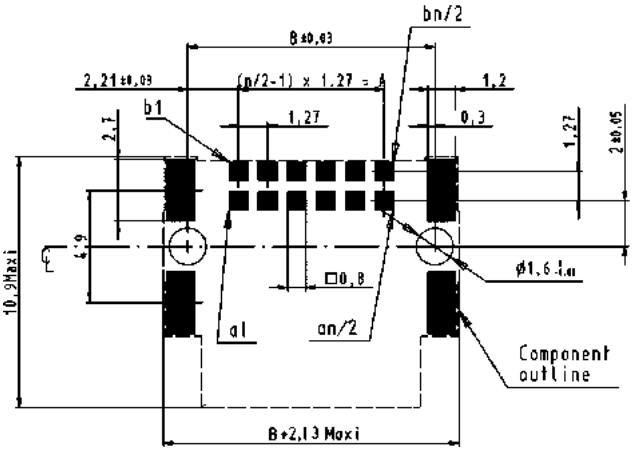

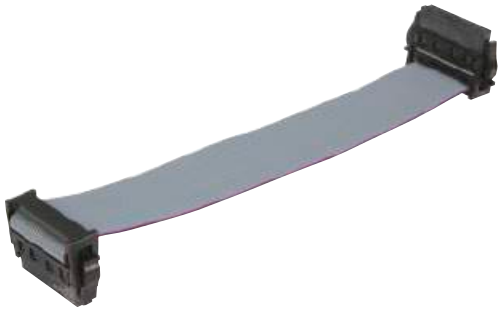

Cable assemblies

Identification		Part number	Drawing	Dimensions in mm
Cable assembly *har*-flex® Cable: Flat cable, AWG 30, 0.635 mm pitch Wiring: 1:1 Connectors with strain relief				
6 poles	Length: L = 0.1 m L = 0.2 m L = 0.5 m	33 15 243 0100 001 33 15 243 0200 002 33 15 243 0500 003	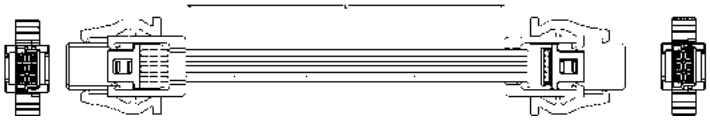	
12 poles	Length: L = 0.1 m L = 0.2 m L = 0.5 m	33 15 243 0100 004 33 15 243 0200 005 33 15 243 0500 006	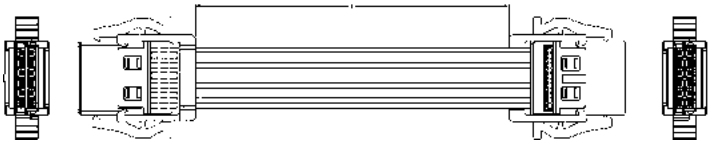	
26 poles	Length: L = 0.1 m L = 0.2 m L = 0.5 m	33 15 243 0100 007 33 15 243 0200 008 33 15 243 0500 009	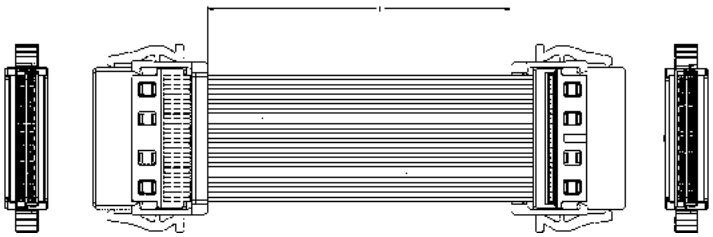	
32 poles	Length: L = 0.1 m L = 0.2 m L = 0.5 m	33 15 243 0100 010 33 15 243 0200 011 33 15 243 0500 012	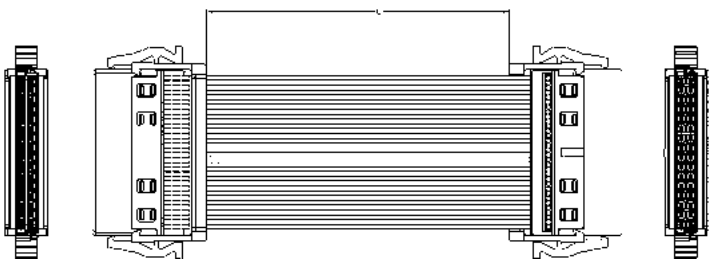	

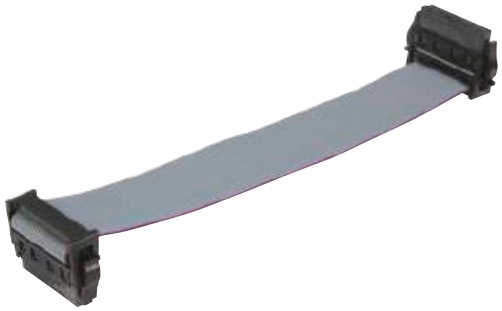

Cable assemblies

Identification		Part number	Drawing	Dimensions in mm
50 poles	Length: L = 0.1 m L = 0.2 m L = 0.5 m	33 15 243 0100 013 33 15 243 0200 014 33 15 243 0500 015	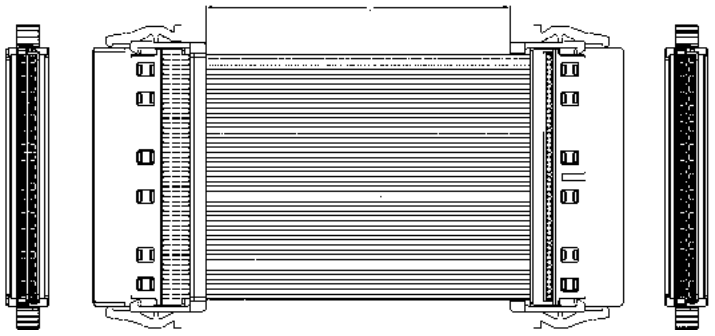	
68 poles	Length: L = 0.1 m L = 0.2 m L = 0.5 m	33 15 243 0100 122 33 15 243 0200 122 33 15 243 0500 122	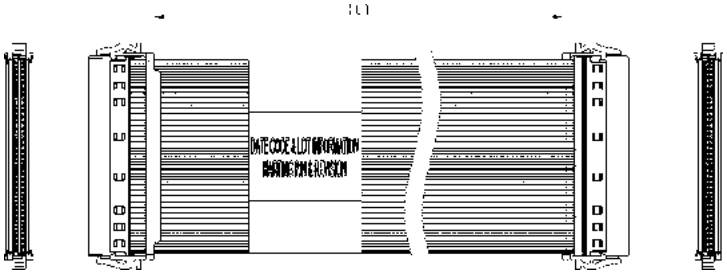	
80 poles	Length: L = 0.1 m L = 0.2 m L = 0.5 m	33 15 243 0100 123 33 15 243 0200 123 33 15 243 0500 123	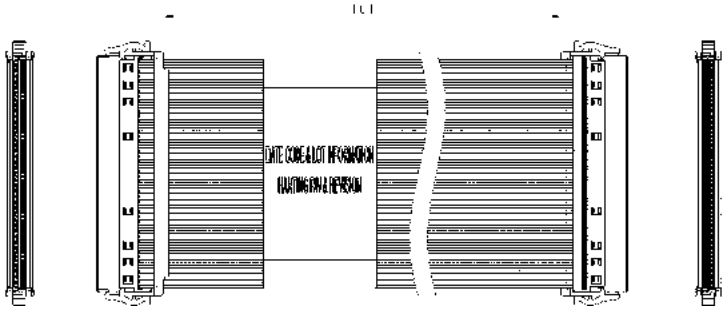	
100 poles	Length: L = 0.1 m L = 0.2 m L = 0.5 m	33 15 243 0100 124 33 15 243 0200 124 33 15 243 0500 124	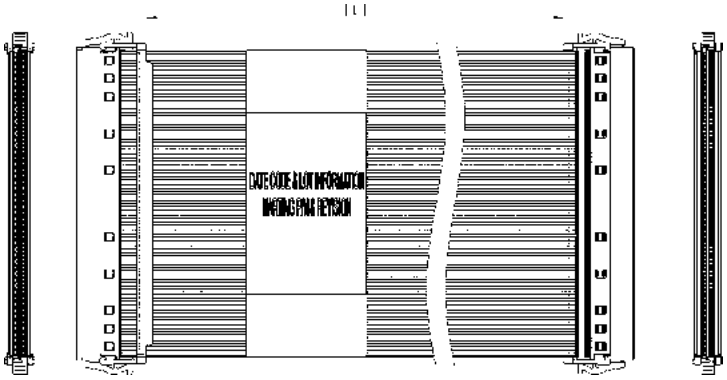	

15. *har*-flexicon® Connectors

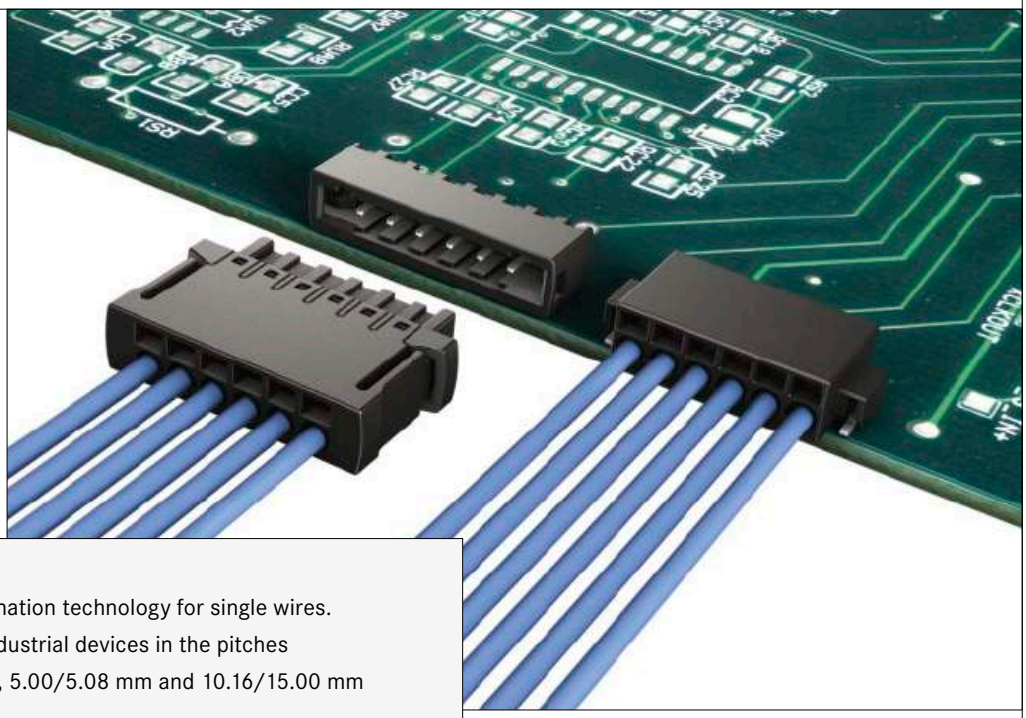

har-flexicon® is the robust PCB termination technology for single wires. Components for the termination of industrial devices in the pitches of 1.27 mm, 2.54 mm, 3.50/3.81 mm, 5.00/5.08 mm and 10.16/15.00 mm are available.
All components are particularly suited for reflow- and wave-soldering on the PCB and offer field assembly with PushIn, insulation displacement and screw termination for single wires.

Application profile:

CONNECTION TYPE		ENVIRONMENT		APPLICATION						
Board to Board	Cable/ Wire to Board	IP20	IP65 / IP67	Data	Signal	Power	high performance			
							Data transfer rate	Shielding	Number of contacts, contact density	Voltage, working current
	●	●		●	●	●	●		●	●

Cable termination

Han-Quick Lock®	*IDC*	*Crimp*
	●	

Screw	*Cage clamp / PushIn*	*Axial screw*
●	●	

PCB termination

THT	*SMC*	*SMT*
●	●	●

Press-in

Application standard

SCSI

Housing integration

Separate housing	*Integrated housing*

Contents

	Page
har-flexicon® connector system – introduction	**15.02**
Pitches 1.27 mm / 2.54 mm	
PCB connectors female with IDC termination	**15.04**
PCB terminal blocks with push-in-spring-cage termination	**15.06**
PCB connectors female with push-in-spring-cage termination	**15.08**
PCB connectors male	**15.10**
Pitches 3.50 mm / 3.81 mm	
PCB terminal blocks with push-in-spring-cage termination	**15.12**
PCB terminal blocks with screw termination	**15.14**
PCB connectors female with push-in-spring-cage termination	**15.16**
PCB connectors female with screw termination	**15.20**
PCB connectors male	**15.22**
Pitches 5.00 mm / 5.08 mm	
PCB terminal blocks with push-in-spring-cage termination	**15.28**
PCB terminal blocks with screw termination	**15.32**
PCB connectors female with push-in-spring-cage termination	**15.36**
PCB connectors female with screw termination	**15.40**
PCB connectors male	**15.42**
Pitches 10.16 mm / 15.00 mm	
PCB terminal blocks with screw termination	**15.48**

har-flexicon® CONNECTORS

Innovative device connectivity technology for all lifelines of industrial devices - it routes power, data and signals through the side of the device to the PCB.

HARTING *har*-flexicon® in the pitches 1.27 mm and 2.54 mm is the miniature SMD connector for the rapid connection of single wires and provides a perfect link between the periphery and PCBs in industrial devices. HARTING is thereby continuing along the path already taken with the *har*-flex® of rethinking and methodically optimizing device connectivity technology.

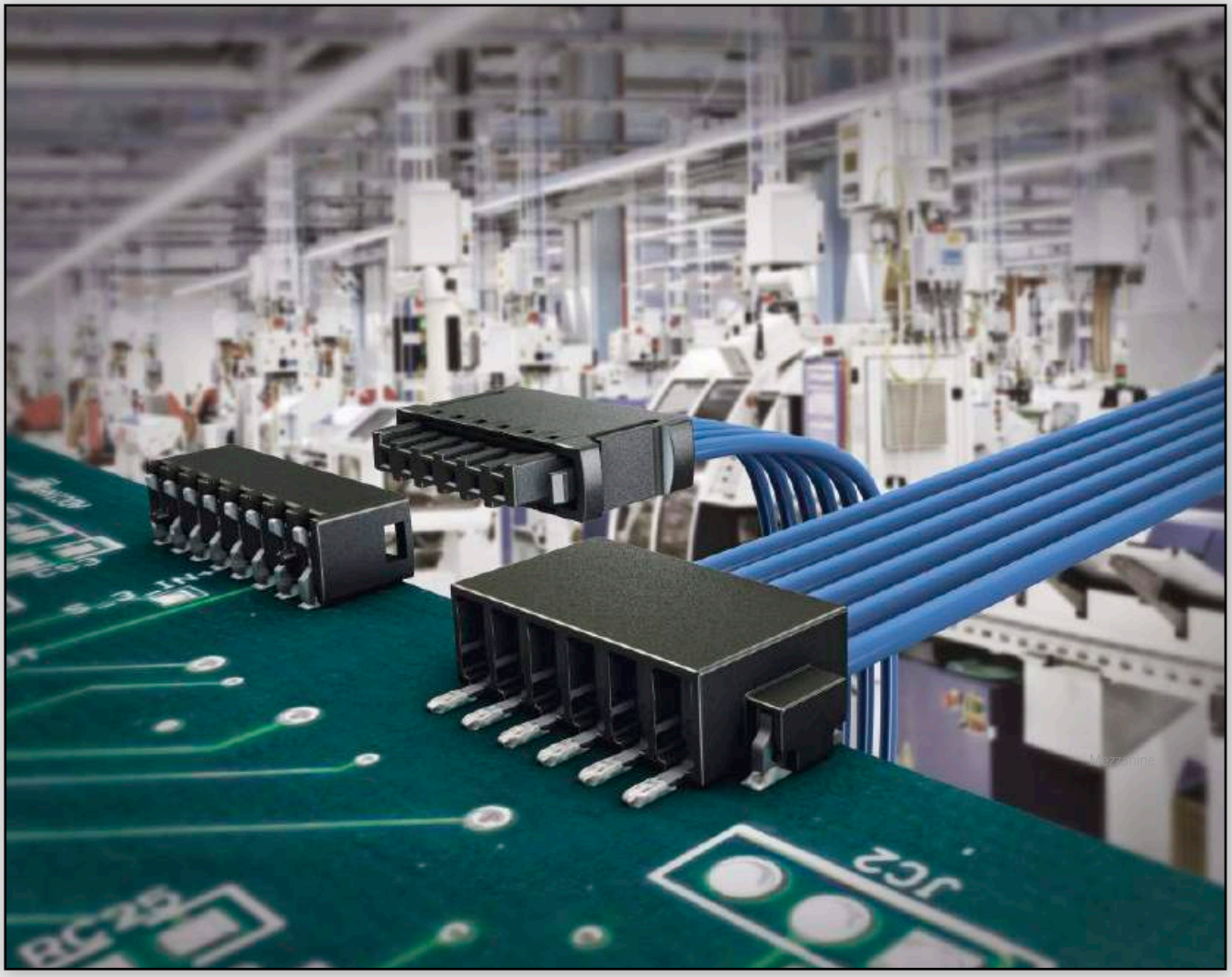

Specific features of the product range

RAPID CONNECTION OF INDIVIDUAL WIRES

har-flexicon® is very easy and quick to use for the smallest of designs. This, in conjunction with a precise cable manager, is what the IDC and the push-in spring-cage termination technology guarantees.

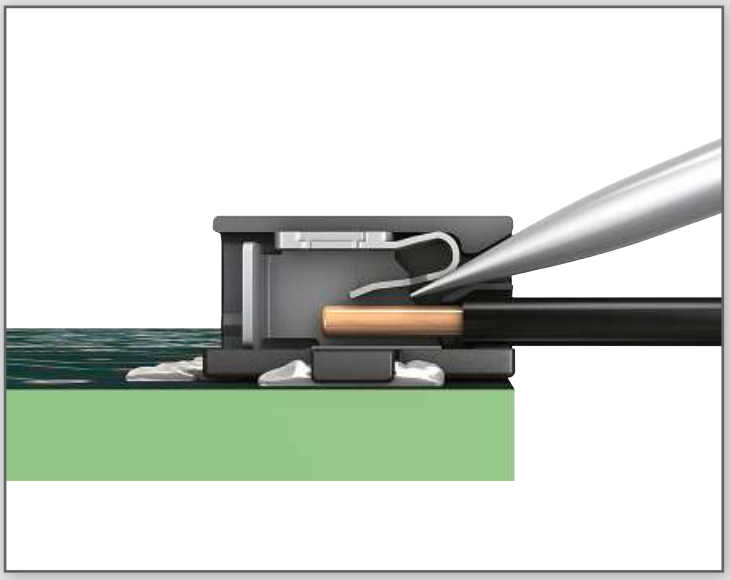

ROBUST SMD DESIGN

The large-area SMT fixings of *har*-flexicon® provide a sturdy connection to the PCB. Insertion and withdrawal forces can be absorbed in order to take the pressure off solder contacts on the connection side.

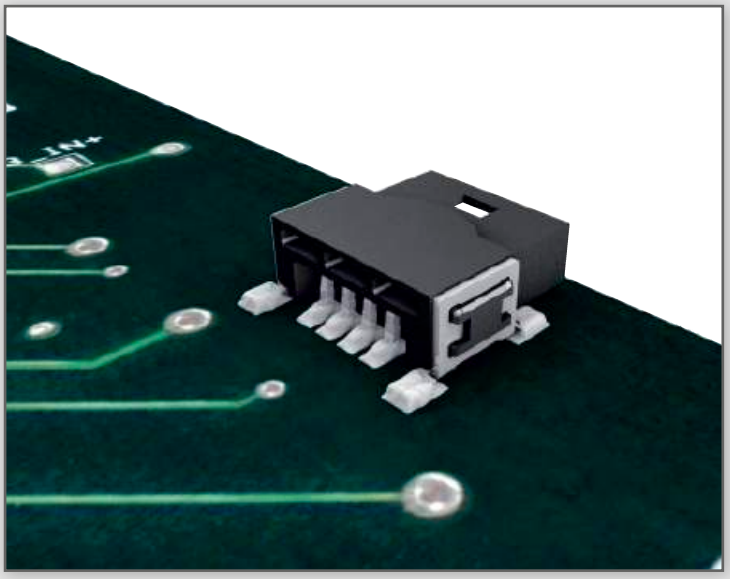

FULLY AUTOMATIC PROCESSING

The use of reflow and SMD-solderable components in automated mount and soldering processes simplifies, and hence optimizes, the production of PCBs.

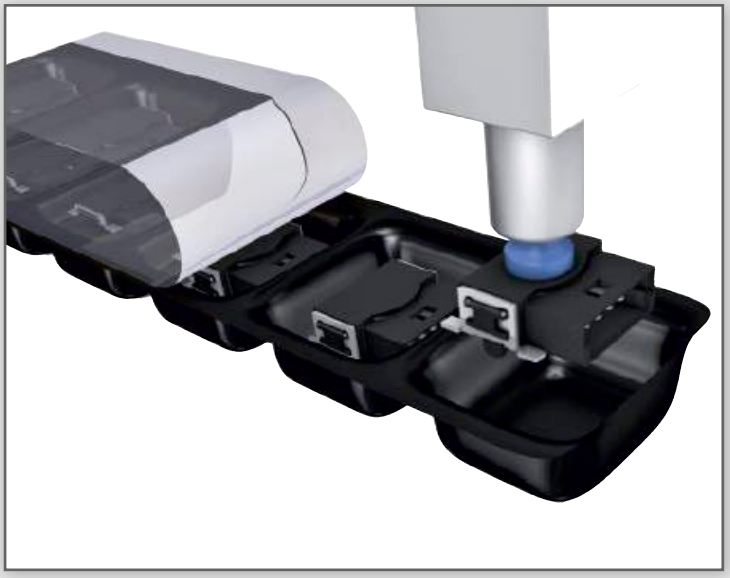

PCB connectors with IDC termination for SMT reflow soldering pitch 1.27 mm

Identification	No. of contacts	Part number	Packaging unit (pieces)
PCB connectors with IDC termination			
Female	4	14 31 041 0301 000	50
Male	4	14 11 041 0002 . . .	560
Screw driver, 1.5 x 40		14 99 000 0002	

333 000 for samples (1 piece) for 560 pieces on reel

PCB connectors with IDC termination
for SMT reflow soldering
pitch 1.27 mm

Drawing

Dimensions in mm

Dimensions

female

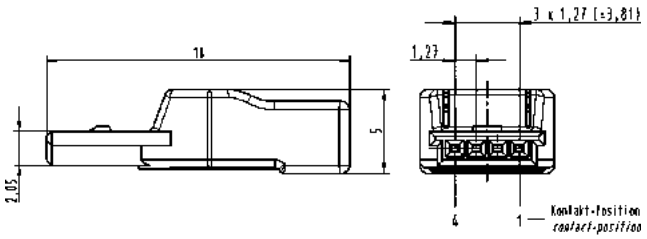

male

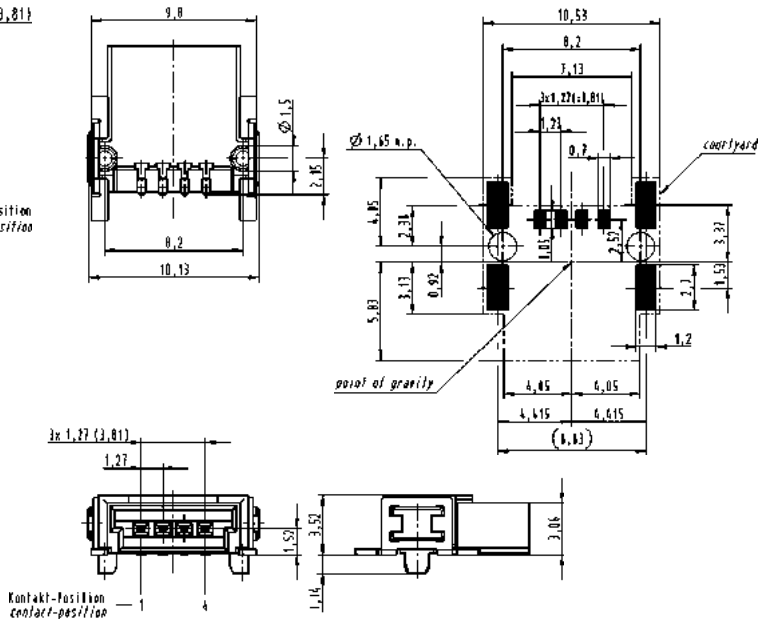

Technical characteristics

Technical data

Rated current	2 A
Pitch	1.27 mm

Surge voltage category / pollution degree	III/3	III/2	II/2
Rated voltage	–	–	16 V
Rated surge voltage	–	–	0.5 kV

Material data

Group of insulation material	III a
Type of insulation material	LCP
Flammability rating per UL 94	V0
Operating temperature	-40 °C … +125 °C
Contact material	Copper alloy
Contact plating	Nickel plated
	UL approval (E 102079)

Conductor data

Connection technology wire	IDC termination
Conductor size solid / stranded	– / 0.05 - 0.14 mm²
Conductor size AWG	28 - 26
Stripping length	0 mm
Conductor diameter	max. 1 mm

Derating

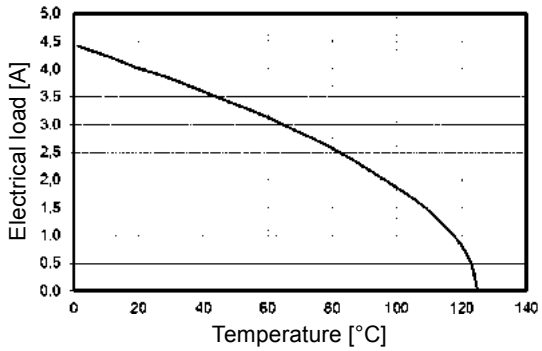

Tested with AWG 26/19

PCB terminal blocks,
vertical/horizontal
with push-in-spring-cage termination
for SMT reflow soldering
pitch 2.54 mm

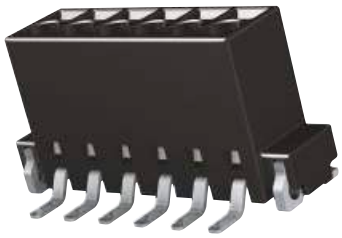

Identification	No. of contacts	Part number	Packaging unit (pieces)
PCB terminal blocks, vertical/horizontal with push-in-spring-cage termination			vertical / horizontal
	2	14 01 021 310 . . .	250 / 500
	3	14 01 031 310 . . .	250 / 500
	4	14 01 041 310 . . .	250 / 500
	5	14 01 051 310 . . .	250 / 500
	6	14 01 061 310 . . .	250 / 500
	7	14 01 071 310 . . .	250 / 500
	8	14 01 081 310 . . .	250 / 500
	9	14 01 091 310 . . .	250 / 500
	10	14 01 101 310 . . .	250 / 500
	11	14 01 111 310 . . .	250 / 500
	12	14 01 121 310 . . .	250 / 500

Please insert digit for

vertical ▶ 1
horizontal ▶ 2

Suitable screw driver 2.0 x 40: Part number 14 99 000 0001

333
000 for samples (1 piece)
for 250/500 pieces on reel

PCB terminal blocks,
vertical/horizontal
with push-in-spring-cage termination
for SMT reflow soldering
pitch 2.54 mm

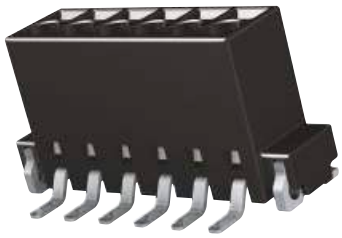

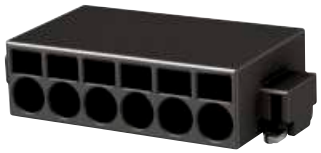

Drawing

Dimensions in mm

Dimensions

vertical

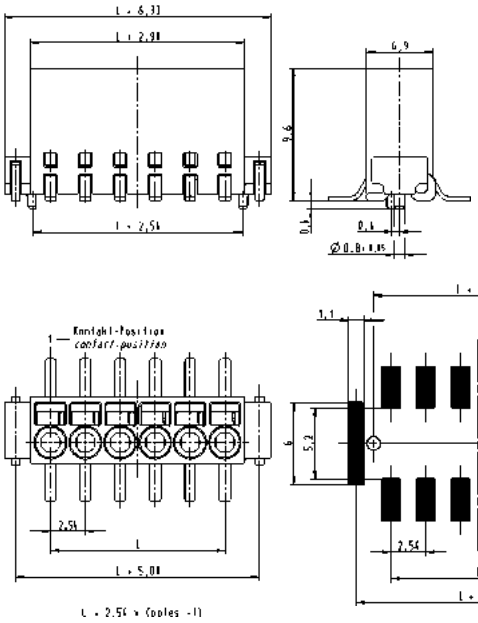

horizontal

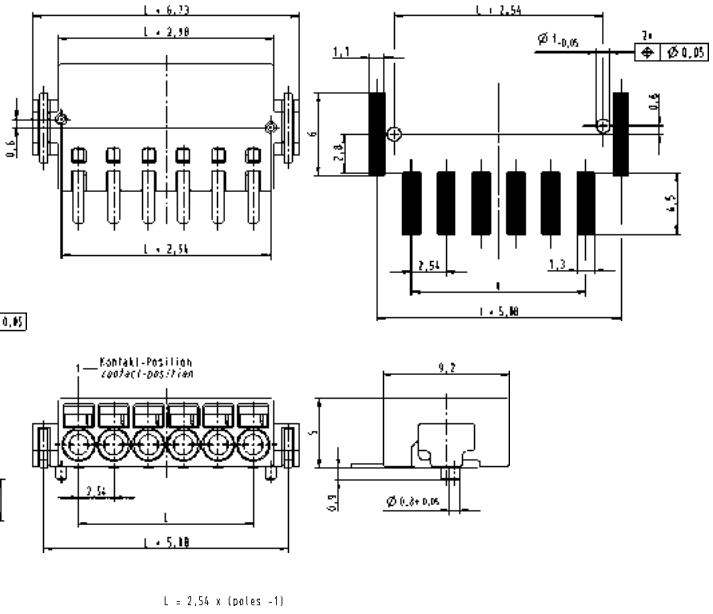

Technical characteristics

Technical data

Rated current	6 A
Pitch	2.54 mm

Surge voltage category / pollution degree	III/3	III/2	II/2
Rated voltage	32 V	160 V	160 V
Rated surge voltage	2.5 kV	2.5 kV	2.5 kV

Material data

Group of insulation material	III a
Type of insulation material	LCP
Flammability rating per UL 94	V0
Operating temperature	-40 °C … +125 °C
Contact material	copper alloy
Contact plating	tin plated
	UL approval (E 102079)

Conductor data

Connection technology wire	push-in-spring-cage termination
Conductor size	
solid / stranded	0.14 - 0.5 / 0.2 - 0.5 mm²
stranded with ferrules without plastic sleeve	0.25 - 0.34 mm²
Conductor size AWG	24 - 20
Stripping length	6 mm

Derating

vertical

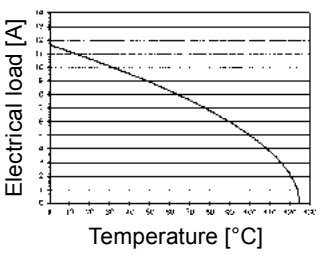

Tested with AWG 20

horizontal

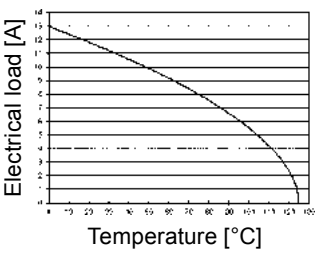

Tested with AWG 20

PCB connectors female,
vertical
with push-in-spring-cage termination
pitch 2.54 mm

Identification	No. of contacts	Part number	Packaging unit (pieces)
PCB connectors female, vertical with push-in-spring-cage termination	2	14 31 021 3101 000	100
	3	14 31 031 3101 000	100
	4	14 31 041 3101 000	100
	5	14 31 051 3101 000	75
	6	14 31 061 3101 000	75
	7	14 31 071 3101 000	75
	8	14 31 081 3101 000	50
	9	14 31 091 3101 000	50
	10	14 31 101 3101 000	50
	11	14 31 111 3101 000	25
	12	14 31 121 3101 000	25

Suitable screw driver 2.0 x 40: Part number 14 99 000 0001

PCB connectors female,
vertical
with push-in-spring-cage termination
pitch 2.54 mm

Drawing

Dimensions in mm

Dimensions

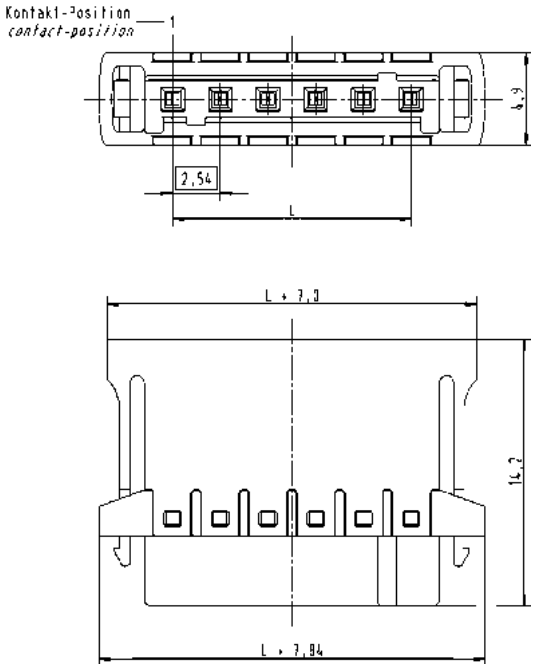

L = pitch x (poles - 1)

Technical characteristics

Technical data

Rated current	6 A
Pitch	2.54 mm

Surge voltage category / pollution degree	III/3	III/2	II/2
Rated voltage	32 V	160 V	160 V
Rated surge voltage	2.5 kV	2.5 kV	2.5 kV

Material data

Group of insulation material	III a
Type of insulation material	LCP
Flammability rating per UL 94	V0
Operating temperature	-40 °C … +125 °C
Contact material	copper alloy
Contact plating	tin plated
	UL approval (E 102079)

Conductor data

Connection technology wire	push-in-spring-cage termination
Conductor size	
solid / stranded	0.14 - 0.5 / 0.2 - 0.5 mm²
stranded with ferrules without plastic sleeve	0.25 - 0.34 mm²
Conductor size AWG	24 - 20
Stripping length	6 mm

Derating

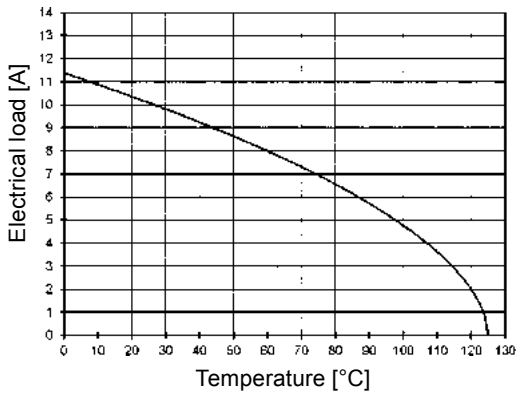

Tested with AWG 20

PCB connectors male, vertical/horizontal for SMT reflow soldering pitch 2.54 mm

Identification	No. of contacts	Part number		Packaging unit (pieces)
PCB connectors male, vertical/horizontal				vertical / horizontal
	2	14 11 021 300	. . .	500 / 600
	3	14 11 031 300	. . .	500 / 600
	4	14 11 041 300	. . .	500 / 600
	5	14 11 051 300	. . .	500 / 600
	6	14 11 061 300	. . .	500 / 600
	7	14 11 071 300	. . .	500 / 600
	8	14 11 081 300	. . .	500 / 600
	9	14 11 091 300	. . .	500 / 600
	10	14 11 101 300	. . .	500 / 600
	11	14 11 111 300	. . .	500 / 600
	12	14 11 121 300	. . .	500 / 600

Please insert digit for

vertical ▶ 1
horizontal ▶ 2

333 000 for samples (1 piece)
for 500/600 pieces on reel

PCB connectors male,
vertical/horizontal
for SMT reflow soldering
pitch 2.54 mm

Drawing

Dimensions in mm

Dimensions

vertical

horizontal

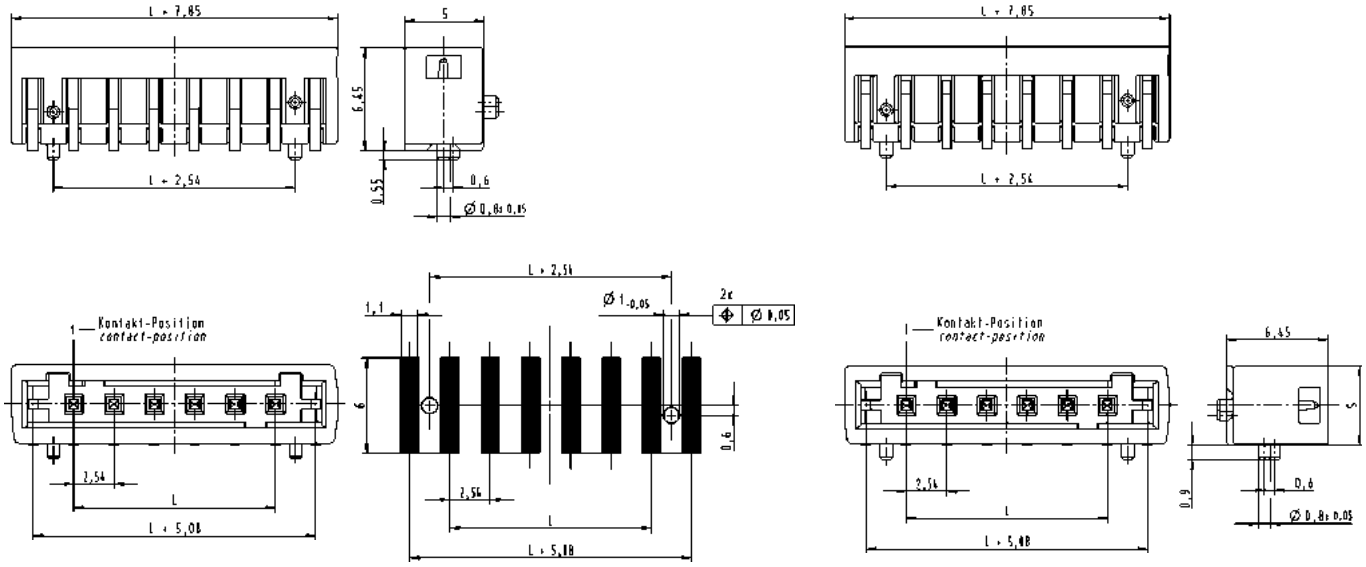

L = pitch x (poles - 1)

Technical characteristics

Technical data

Rated current	6 A
Pitch	2.54 mm

Surge voltage category / pollution degree	III/3	III/2	II/2
Rated voltage	32 V	160 V	160 V
Rated surge voltage	2.5 kV	2.5 kV	2.5 kV

Material data

Group of insulation material	III a
Type of insulation material	LCP
Flammability rating per UL 94	V0
Operating temperature	-40 °C … +125 °C
Contact material	copper alloy
Contact plating	tin plated
	UL approval (E 102079)

Derating

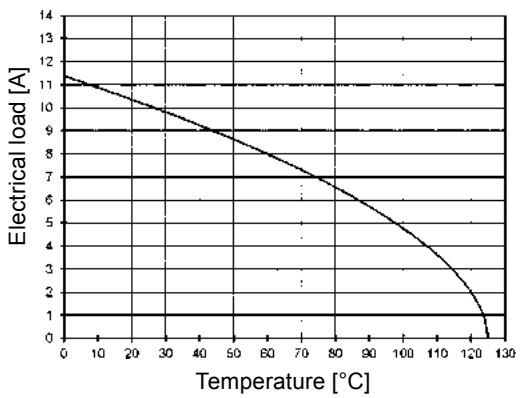

Tested
with AWG 20

PCB terminal blocks,
vertical with push-in-spring-cage termination
for reflow soldering
pitch 3.50 / 3.81 mm

Identification	No. of contacts	Part number	Packaging unit (pieces)
PCB terminal blocks, vertical with push-in-spring-cage termination	2	14 02 021 . 101 . . .	100
	3	14 02 031 . 101 . . .	100
	4	14 02 041 . 101 . . .	75
	5	14 02 051 . 101 . . .	75
	6	14 02 061 . 101 . . .	50
	7	14 02 071 . 101 . . .	50
	8	14 02 081 . 101 . . .	50
	9	14 02 091 . 101 . . .	50
	10	14 02 101 . 101 . . .	50
	11	14 02 111 . 101 . . .	50
	12	14 02 121 . 101 . . .	50
	13	14 02 131 . 101 . . .	50
	14	14 02 141 . 101 . . .	50
	15	14 02 151 . 101 . . .	50
	16	14 02 161 . 101 . . .	50

Please insert digit for

pitch 3.50 mm ▶ 4
pitch 3.81 mm ▶ 5

for samples (1 piece)
for a packaging unit 333 000

PCB terminal blocks,
vertical with push-in-spring-cage termination
for reflow soldering
pitch 3.50 / 3.81 mm

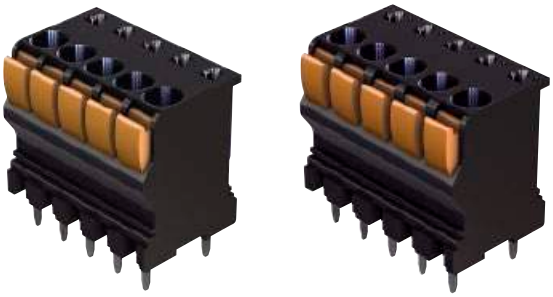

Drawing

Dimensions in mm

Dimensions

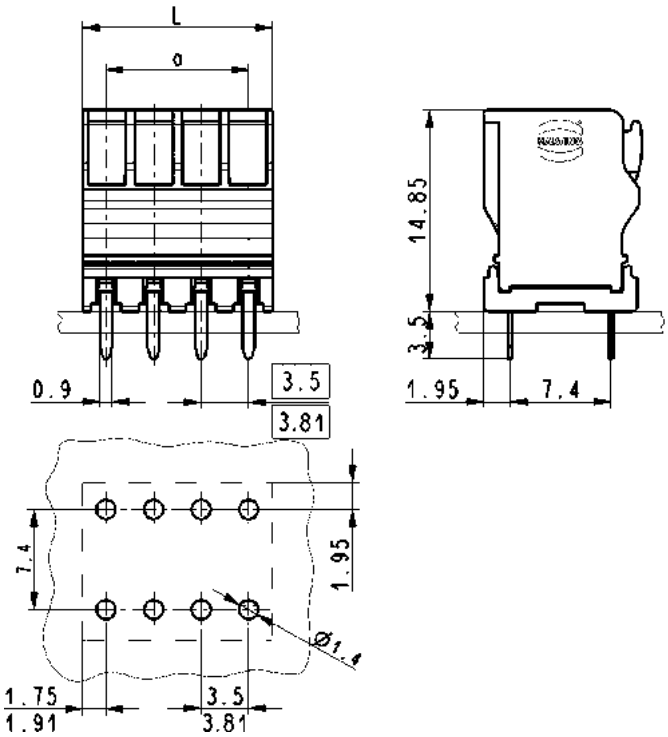

L = pitch x poles
a = pitch x (poles - 1)

Technical characteristics

Technical data

Rated current	10 A
Pitch	3.50 mm / 3.81 mm

Surge voltage category / pollution degree	III/3	III/2	II/2
Rated voltage	220 V	300 V	600 V
Rated surge voltage	4 kV	4 kV	4 kV

Material data

Group of insulation material	I
Type of insulation material	PA / PPA
Flammability rating per UL 94	V0
Operating temperature	-40 °C … +110 °C
Contact material	copper alloy
Contact plating	tin plated
	UL approval (E 102079)

Conductor and solder pin data

Connection technology wire	push-in-spring-cage termination
Conductor size solid / stranded stranded with ferrules without / with plastic sleeve	 0.14 - 1.5 / 0.14 - 1.5 mm² 0.50 - 1.5 / 0.10 - 1.5 mm²
Conductor size AWG	30 - 16
Stripping length	9 - 10 mm
Solder pin: drilled hole diameter	1.4 mm

Approval data (UL)

Use group	B	C	D
Rated voltage	300 V	–	300 V
Rated current	10 A	–	10 A

PCB terminal blocks, horizontal with screw termination for reflow soldering pitch 3.50 / 3.81 mm

Identification	No. of contacts	Part number	Packaging unit (pieces)
PCB terminal blocks, horizontal with screw termination	2	14 02 021 . 402 . . .	100
	3	14 02 031 . 402 . . .	100
	4	14 02 041 . 402 . . .	75
	5	14 02 051 . 402 . . .	75
	6	14 02 061 . 402 . . .	50
	7	14 02 071 . 402 . . .	50
	8	14 02 081 . 402 . . .	50
	9	14 02 091 . 402 . . .	50
	10	14 02 101 . 402 . . .	50
	11	14 02 111 . 402 . . .	50
	12	14 02 121 . 402 . . .	50

Please insert digit for

pitch 3.50 mm ▶ 4

pitch 3.81 mm ▶ 5

for samples (1 piece) 333
for a packaging unit 000

PCB terminal blocks,
horizontal with screw termination
for reflow soldering
pitch 3.50 / 3.81 mm

Drawing

Dimensions in mm

Dimensions

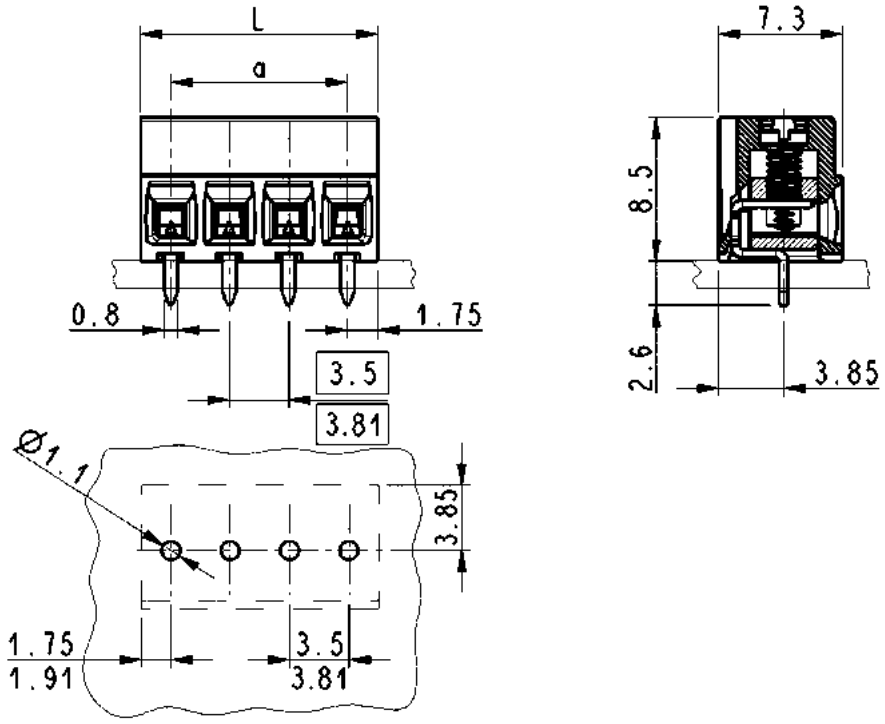

L = pitch x poles
a = pitch x (poles - 1)

Technical characteristics

Technical data

Rated current	12 A
Pitch	3.50 mm / 3.81 mm

Surge voltage category / pollution degree	III/3	III/2	II/2
Rated voltage	150 V	150 V	300 V
Rated surge voltage	2.5 kV	2.5 kV	2.5 kV

Conductor and solder pin data

Connection technology wire	screw termination
Conductor	
size solid / stranded	0.05 - 1.5 / 0.05 - 1 mm²
stranded with ferrules without / with plastic sleeve	0.50 - 1 / 0.10 - 1 mm²
Conductor size AWG	28 - 16
Screw thread	M2
Tightening torque	0.2 - 0,25 Nm
Stripping length	5 - 6 mm
Solder pin: drilled hole diameter	1.1 mm

Material data

Group of insulation material	I
Type of insulation material	PA / PPA
Flammability rating per UL 94	V0
Operating temperature	-40 °C … +110 °C
Contact material	copper alloy
Contact plating	tin plated
	UL approval (E 102079)

Approval data (UL)

Use group	B	C	D
Rated voltage	300 V	–	300 V
Rated current	12 A	–	12 A

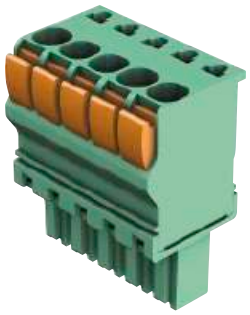

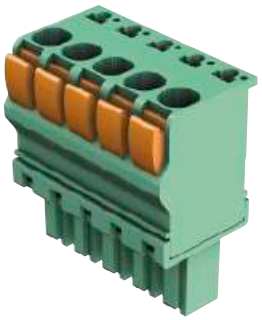

PCB connectors female, horizontal with push-in-spring-cage termination pitch 3.50 / 3.81 mm

Identification	No. of contacts	Part number	Packaging unit (pieces)
PCB connectors female, horizontal with push-in-spring-cage termination	2	14 31 021 . 102 000	300
	3	14 31 031 . 102 000	200
	4	14 31 041 . 102 000	150
	5	14 31 051 . 102 000	150
	6	14 31 061 . 102 000	100
	7	14 31 071 . 102 000	100
	8	14 31 081 . 102 000	100
	9	14 31 091 . 102 000	100
	10	14 31 101 . 102 000	100
	11	14 31 111 . 102 000	100
	12	14 31 121 . 102 000	100
	13	14 31 131 . 102 000	50
	14	14 31 141 . 102 000	50
	15	14 31 151 . 102 000	50
	16	14 31 161 . 102 000	50
	17	14 31 171 . 102 000	50
	18	14 31 181 . 102 000	50
	19	14 31 191 . 102 000	50
	20	14 31 201 . 102 000	50
	21*	14 31 211 . 102 000	25
	22*	14 31 221 . 102 000	25
	23*	14 31 231 . 102 000	25
	24*	14 31 241 . 102 000	25
	25*	14 31 251 . 102 000	25
Please insert digit for pitch 3.50 mm ▶ 4 pitch 3.81 mm ▶ 5			
Coding keys		14 95 000 0050 000	120

* Pitch 3.50 mm only available with 2-20 contacts

PCB connectors female,
horizontal
with push-in-spring-cage termination
pitch 3.50 / 3.81 mm

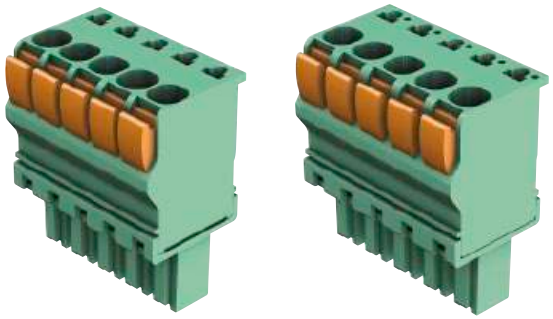

Drawing

Dimensions in mm

Dimensions

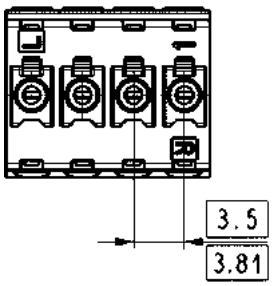

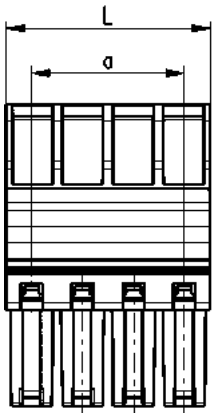

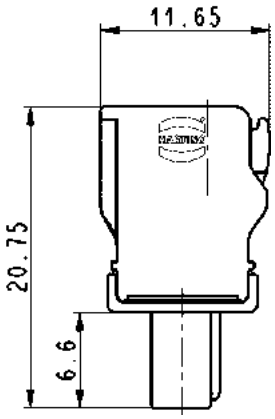

L = pitch x poles
a = pitch x (poles - 1)

Technical characteristics

Technical data

Rated current	11 A
Pitch	3.50 mm / 3.81 mm

Surge voltage category / pollution degree	III/3	III/2	II/2
Rated voltage	150 V	150 V	300 V
Rated surge voltage	2.5 kV	2.5 kV	2.5 kV

Material data

Group of insulation material	I
Type of insulation material	PA / PPA
Flammability rating per UL 94	V0
Operating temperature	-40 °C … +110 °C
Contact material	copper alloy
Contact plating	tin plated
	UL approval (E 102079)

Conductor data

Connection technology wire	push-in-spring-cage termination
Conductor size solid / stranded stranded with ferrules without / with plastic sleeve	 0.14 - 1.5 / 0.14 - 1.5 mm² 0.50 - 1.5 / 0.10 - 1.5 mm²
Conductor size AWG	30 - 14
Stripping length	9 - 10 mm

Approval data (UL)

Use group		B	C	D
Rated voltage		300 V	–	–
Rated current	solid	9 A	–	–
	stranded	11 A	–	–

PCB connectors female with screw flange, horizontal
with push-in-spring-cage termination
pitch 3.50 / 3.81 mm

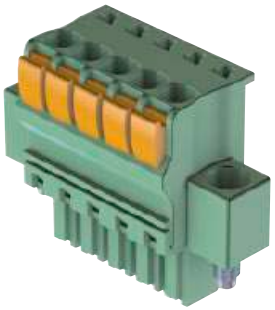

Identification	No. of contacts	Part number	Packaging unit (pieces)
PCB connectors female with screw flange, horizontal with push-in-spring-cage termination	2	14 31 021 . 106 000	300
	3	14 31 031 . 106 000	200
	4	14 31 041 . 106 000	150
	5	14 31 051 . 106 000	150
	6	14 31 061 . 106 000	100
	7	14 31 071 . 106 000	100
	8	14 31 081 . 106 000	100
	9	14 31 091 . 106 000	100
	10	14 31 101 . 106 000	100
	11	14 31 111 . 106 000	100
	12	14 31 121 . 106 000	100
	13	14 31 131 . 106 000	50
	14	14 31 141 . 106 000	50
	15	14 31 151 . 106 000	50
	16	14 31 161 . 106 000	50
	17	14 31 171 . 106 000	50
	18	14 31 181 . 106 000	50
	19	14 31 191 . 106 000	50
	20	14 31 201 . 106 000	50
	21	14 31 211 . 106 000	50
	22	14 31 221 . 106 000	50
Please insert digit for pitch 3.50 mm ▶ 4 pitch 3.81 mm ▶ 5			
Coding keys		14 95 000 0050 000	120

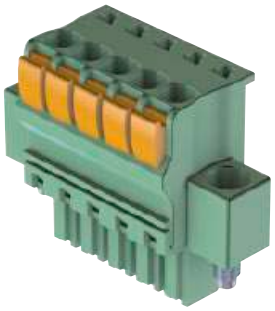

PCB connectors female with screw flange,
horizontal
with push-in-spring-cage termination
pitch 3.50 / 3.81 mm

Drawing

Dimensions in mm

Dimensions

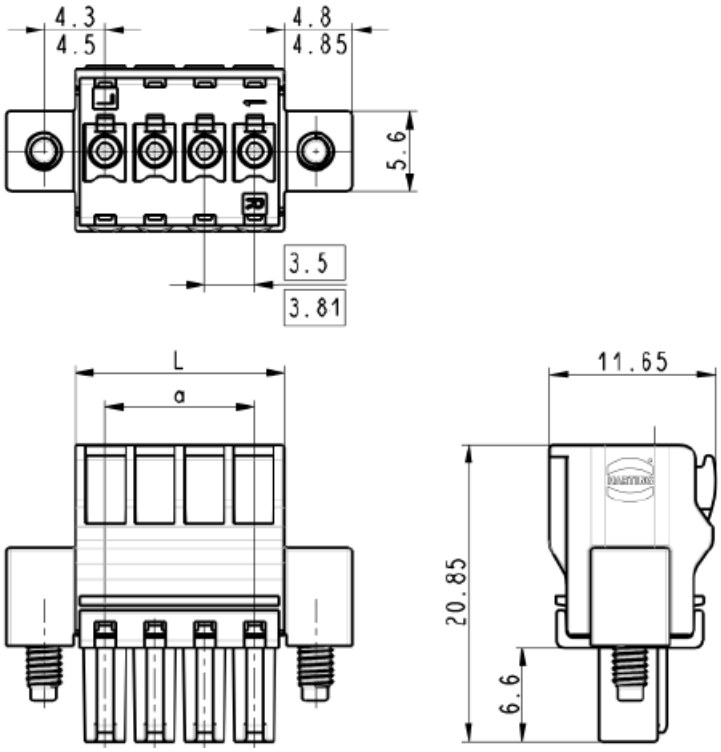

L = (pitch x poles) + 0.7 mm
a = pitch x (poles - 1)

Technical characteristics

Technical data

Rated current	11 A
Pitch	3.50 mm / 3.81 mm

Surge voltage category / pollution degree	III/3	III/2	II/2
Rated voltage	150 V	150 V	300 V
Rated surge voltage	2.5 kV	2.5 kV	2.5 kV

Material data

Group of insulation material	I
Type of insulation material	PA / PPA
Flammability rating per UL 94	V0
Operating temperature	-40 °C … +110 °C
Contact material	copper alloy
Contact plating	tin plated
	UL approval (E 102079)
Screw flange	M2.5

Conductor data

Connection technology wire	push-in-spring-cage termination
Conductor	
size solid / stranded	0.14 - 1.5 / 0.14 - 1.5 mm²
stranded with ferrules without / with plastic sleeve	0.50 - 1.5 / 0.10 - 1.5 mm²
Conductor size AWG	30 - 14
Stripping length	9 - 10 mm

Approval data (UL)

Use group		B	C	D
Rated voltage		300 V	–	–
Rated current	solid	9 A	–	–
	stranded	11 A	–	–

PCB connectors female, vertical/horizontal with screw termination pitch 3.50 / 3.81 mm

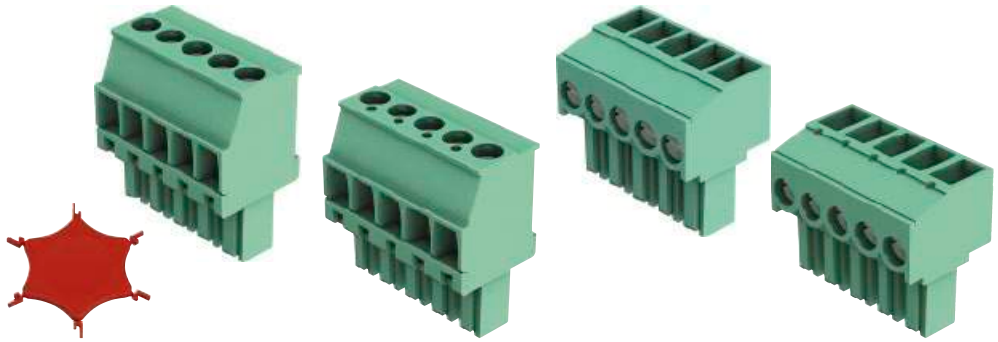

Identification	No. of contacts	Part number	Packaging unit (pieces)
PCB connectors female, vertical/horizontal with screw termination	2	14 31 021 . 40 . 000	300
	3	14 31 031 . 40 . 000	200
	4	14 31 041 . 40 . 000	150
	5	14 31 051 . 40 . 000	150
	6	14 31 061 . 40 . 000	100
	7	14 31 071 . 40 . 000	100
	8	14 31 081 . 40 . 000	100
	9	14 31 091 . 40 . 000	100
	10	14 31 101 . 40 . 000	100
	11	14 31 111 . 40 . 000	100
	12	14 31 121 . 40 . 000	100
	13	14 31 131 . 40 . 000	50
	14	14 31 141 . 40 . 000	50
	15	14 31 151 . 40 . 000	50
	16	14 31 161 . 40 . 000	50
	17*	14 31 171 . 40 . 000	50
	18*	14 31 181 . 40 . 000	50
	19*	14 31 191 . 40 . 000	50
	20*	14 31 201 . 40 . 000	50
	21*	14 31 211 . 40 . 000	25
	22*	14 31 221 . 40 . 000	25
	23*	14 31 231 . 40 . 000	25
	24*	14 31 241 . 40 . 000	25
	25*	14 31 251 . 40 . 000	25

Please insert digit for

pitch 3.50 mm ▶ 4
pitch 3.81 mm ▶ 5

vertical ▶ 1
horizontal ▶ 2

Coding keys	14 95 000 0050 000	120

* Pitch 3.81 mm (vertical) only available with 2-16 contacts

PCB connectors female,
vertical/horizontal
with screw termination
pitch 3.50 / 3.81 mm

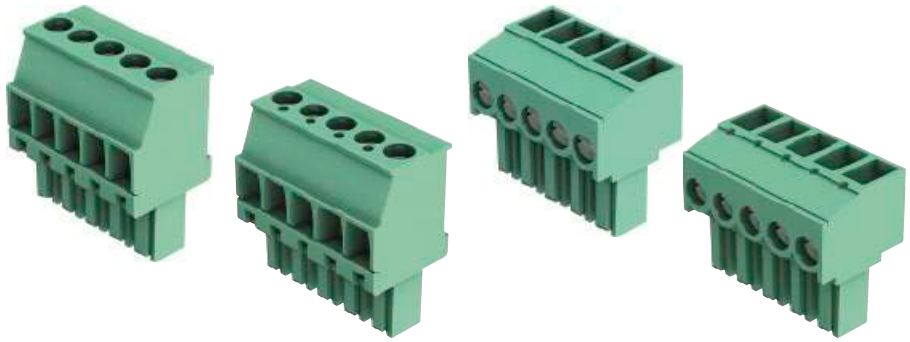

Drawing

Dimensions in mm

Dimensions

vertical

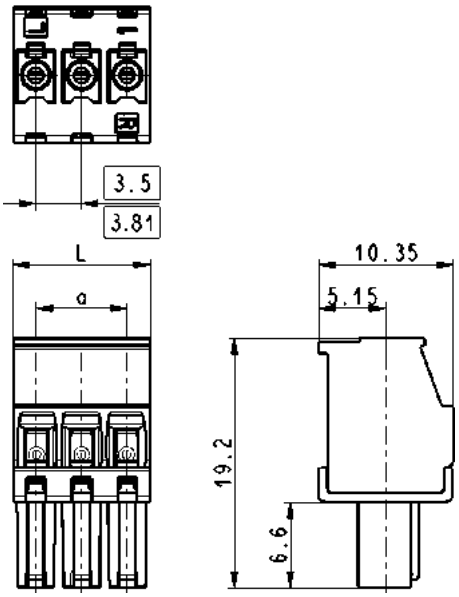

L = pitch x poles
a = pitch x (poles - 1)

horizontal

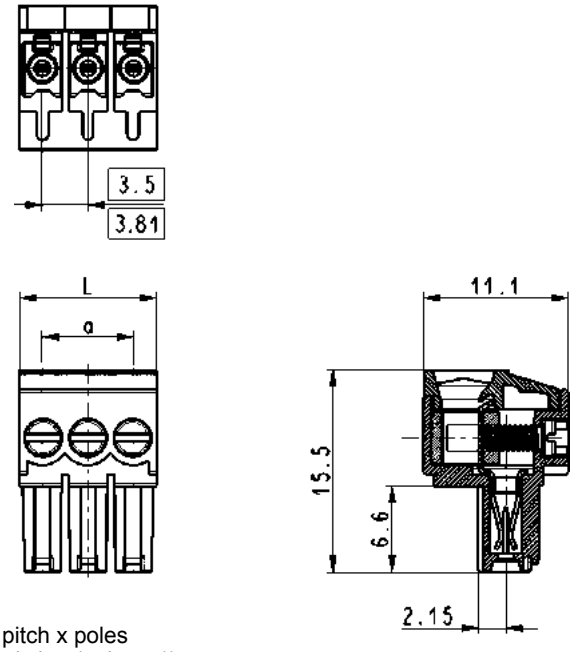

L = pitch x poles
a = pitch x (poles - 1)

Technical characteristics

Technical data

Rated current	10 A
Pitch	3.50 mm / 3.81 mm

Surge voltage category / pollution degree	III/3	III/2	II/2
Rated voltage	150 V	150 V	300 V
Rated surge voltage	2.5 kV	2.5 kV	2.5 kV

Material data

Group of insulation material	I
Type of insulation material	PA / PPA
Flammability rating per UL 94	V0
Operating temperature	-40 °C … +110 °C
Contact material	copper alloy
Contact plating	tin plated
	UL approval (E 102079)

Conductor data

Connection technology wire	screw termination
Conductor	
size solid / stranded	0.05 - 1.5 / 0.05 - 1 mm²
stranded with ferrules without / with plastic sleeve	0.50 - 1 / 0.10 - 1 mm²
Conductor size AWG	30 - 14
Screw thread	M2
Tightening torque	0.2 - 0.25 Nm
Stripping length	5.0 - 6.0 mm

Approval data (UL)

Use group		B	C	D
Rated voltage		300 V	–	300 V
Rated current	vertical	10 A	–	10 A
	horizontal	11 A	–	11 A

PCB connectors male, vertical for wave soldering pitch 3.50 mm

Identification	No. of contacts	Part number	Packaging unit (pieces)
Connectors, male, vertical			
	2	14 13 021 4001 000	100
	3	14 13 031 4001 000	100
	4	14 13 041 4001 000	75
	5	14 13 051 4001 000	75
	6	14 13 061 4001 000	50
	7	14 13 071 4001 000	50
	8	14 13 081 4001 000	50
	9	14 13 091 4001 000	50
	10	14 13 101 4001 000	50
	11	14 13 111 4001 000	50
	12	14 13 121 4001 000	50
Coding keys		14 95 000 0052 000	120

PCB connectors male,
vertical
for wave soldering
pitch 3.50 mm

Drawing

Dimensions in mm

Dimensions

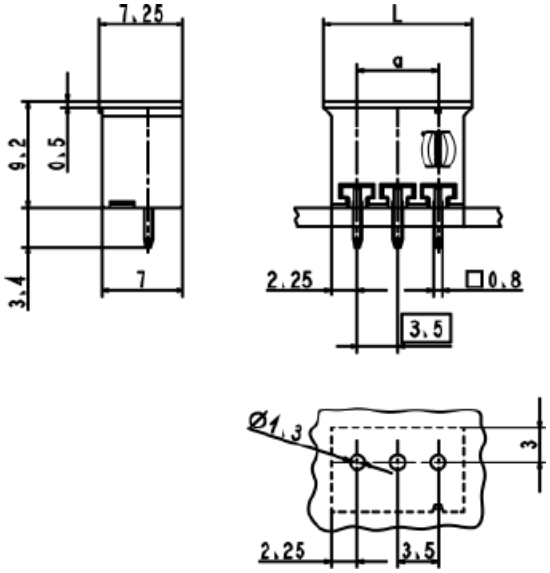

L = (pitch x poles) + 2.3 mm
a = pitch x (poles - 1)

Technical characteristics

Technical data

Rated current	11 A
Pitch	3.50 mm

Surge voltage category / pollution degree	III/3	III/2	II/2
Rated voltage	150 V	150 V	300 V
Rated surge voltage	2.5 kV	2.5 kV	2.5 kV

Material data

Group of insulation material	I
Type of insulation material	PA
Flammability rating per UL 94	V0
Operating temperature	-40 °C … +110 °C
Contact material	copper alloy
Contact plating	tin plated
	UL approval (E 102079)

Solder pin data

Solder pin: drilled hole diameter	1.3 mm

Approval data (UL)

Use group	B	C	D
Rated voltage	300 V	–	300 V
Rated current	11 A	–	11 A

PCB connectors male, vertical/horizontal for reflow soldering pitch 3.50 / 3.81 mm

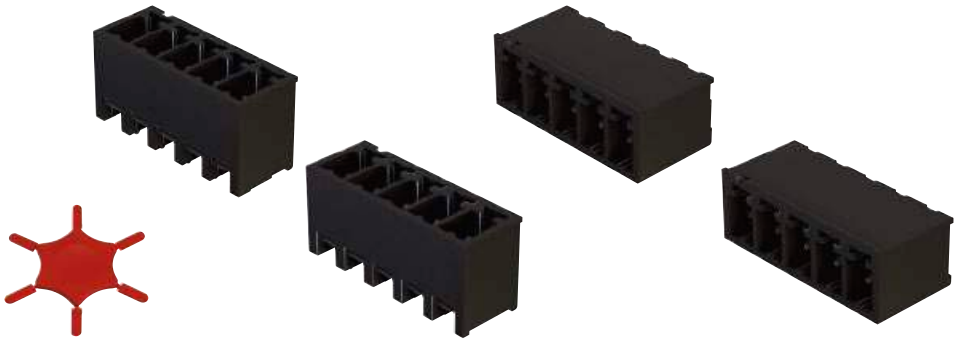

Identification	No. of contacts	Part number	Packaging unit (pieces)
Connectors, male, vertical/horizontal			
	2	14 12 021 . 00	100
	3	14 12 031 . 00	100
	4	14 12 041 . 00	75
	5	14 12 051 . 00	75
	6	14 12 061 . 00	50
	7	14 12 071 . 00	50
	8	14 12 081 . 00	50
	9	14 12 091 . 00	50
	10	14 12 101 . 00	50
	11	14 12 111 . 00	50
	12	14 12 121 . 00	50
	13	14 12 131 . 00	50
	14	14 12 141 . 00	50
	15	14 12 151 . 00	50
	16	14 12 161 . 00	50
	17	14 12 171 . 00	50
	18	14 12 181 . 00	50
	19	14 12 191 . 00	50
	20	14 12 201 . 00	50
	21	14 12 211 . 00	25
	22	14 12 221 . 00	25
	23	14 12 231 . 00	25
	24	14 12 241 . 00	25
	25	14 12 251 . 00	25

Please insert digit for

pitch 3.50 mm ▶	4
pitch 3.81 mm ▶	5
vertical ▶	1
horizontal ▶	2

Coding keys		14 95 000 0052 000	120

for samples (1 piece)
for a packaging unit 333 000

PCB connectors male,
vertical/horizontal
for reflow soldering
pitch 3.50 / 3.81 mm

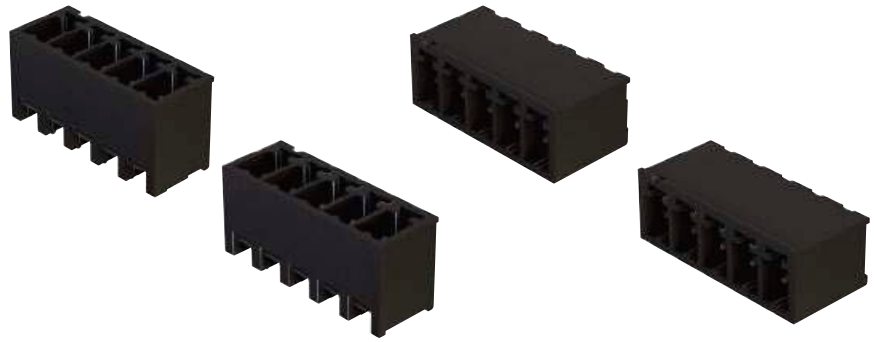

Drawing

Dimensions in mm

Dimensions

vertical

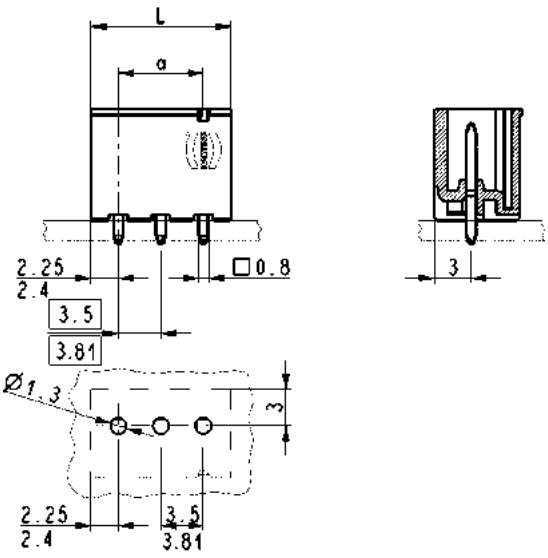

L = (pitch x poles) + 1 mm
a = pitch x (poles - 1)

horizontal

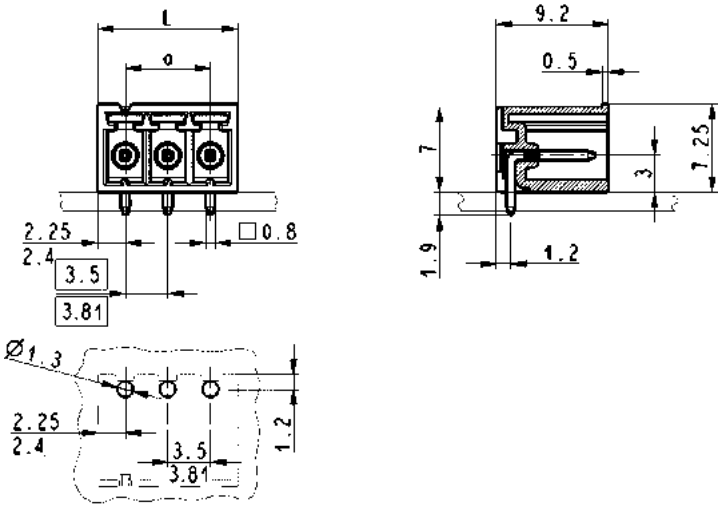

L = (pitch x poles) + 1 mm
a = pitch x (poles - 1)

Technical characteristics

Technical data

Rated current	11 A
Pitch	3.50 mm / 3.81 mm

Surge voltage category / pollution degree	III/3	III/2	II/2
Rated voltage	150 V	150 V	300 V
Rated surge voltage	2.5 kV	2.5 kV	2.5 kV

Material data

Group of insulation material	I
Type of insulation material	PA / PPA
Flammability rating per UL 94	V0
Operating temperature	-40 °C … +110 °C
Contact material	copper alloy
Contact plating	tin plated
	UL approval (E 102079)

Solder pin data

Solder pin: drilled hole diameter	1.3 mm

Approval data (UL)

Use group	B	C	D
Rated voltage	300 V	–	300 V
Rated current	11 A	–	11 A

PCB connectors male with thread flange, vertical/horizontal for reflow soldering pitch 3.50 / 3.81 mm

Identification	No. of contacts	Part number	Packaging unit (pieces)
PCB connectors male with thread flange, vertical/horizontal			
	2	14 12 021 . 00	100
	3	14 12 031 . 00	100
	4	14 12 041 . 00	75
	5	14 12 051 . 00	75
	6	14 12 061 . 00	50
	7	14 12 071 . 00	50
	8	14 12 081 . 00	50
	9	14 12 091 . 00	50
	10	14 12 101 . 00	50
	11	14 12 111 . 00	50
	12	14 12 121 . 00	50
	13	14 12 131 . 00	50
	14	14 12 141 . 00	50
	15	14 12 151 . 00	50
	16	14 12 161 . 00	50
	17	14 12 171 . 00	50
	18	14 12 181 . 00	50
	19	14 12 191 . 00	50
	20	14 12 201 . 00	50
	21	14 12 211 . 00	25
	22	14 12 221 . 00	25

Please insert digit for

pitch 3.50 mm ▶ 4
pitch 3.81 mm ▶ 5

vertical ▶ 5
horizontal ▶ 6

Coding keys		14 95 000 0052 000	120

for samples (1 piece) / for a packaging unit 333 000

PCB connectors male
with thread flange,
vertical/horizontal
for reflow soldering
pitch 3.50 / 3.81 mm

Drawing — Dimensions in mm

Dimensions

vertical

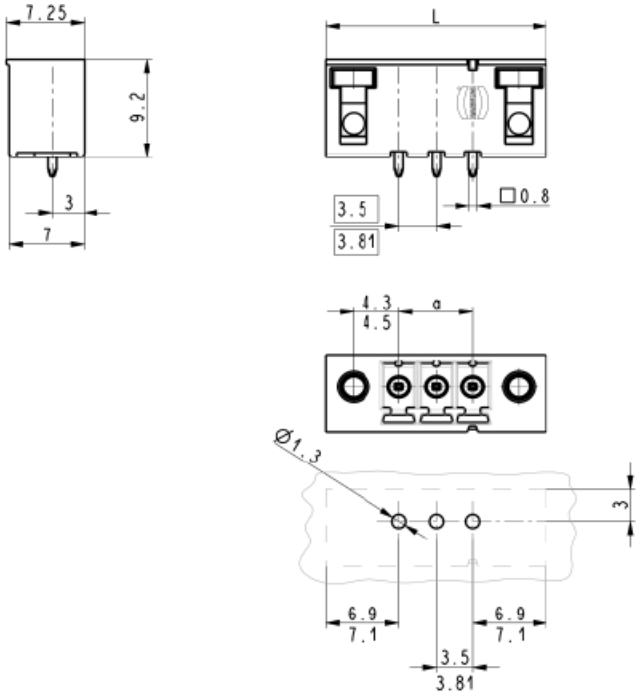

horizontal

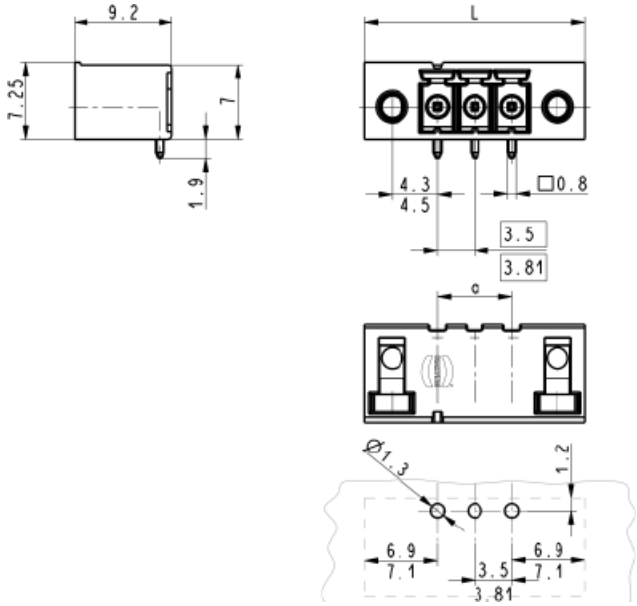

Pitch 3.50 mm: L = (3.50 mm x poles) + 10.3 mm
Pitch 3.81 mm: L = (3.81 mm x poles) + 10.39 mm
a = pitch x (poles - 1)

Pitch 3.50 mm: L = (3.50 mm x poles) + 10.3 mm
Pitch 3.81 mm: L = (3.81 mm x poles) + 10.39 mm
a = pitch x (poles - 1)

Technical characteristics

Technical data

Rated current	11 A
Pitch	3.50 mm / 3.81 mm

Surge voltage category / pollution degree	III/3	III/2	II/2
Rated voltage	150 V	150 V	300 V
Rated surge voltage	2.5 kV	2.5 kV	2.5 kV

Solder pin data

Solder pin: drilled hole diameter	1.3 mm

Material data

Group of insulation material	I
Type of insulation material	PA / PPA
Flammability rating per UL 94	V0
Operating temperature	-40 °C … +110 °C
Contact material	copper alloy
Contact plating	tin plated
	UL approval (E 102079)
Thread flange	M2.5

Approval data (UL)

Use group	B	C	D
Rated voltage	300 V	–	300 V
Rated current	11 A	–	11 A

PCB terminal blocks,
vertical with push-in-spring-cage termination
for wave soldering
pitch 5.00 mm

Identification	No. of contacts	Part number	Packaging unit (pieces)
PCB terminal blocks, vertical with push-in-spring-cage termination	2	14 03 021 6101 000	300
	3	14 03 031 6101 000	200
	4	14 03 041 6101 000	150
	5	14 03 051 6101 000	150
	6	14 03 061 6101 000	100
	7	14 03 071 6101 000	100
	8	14 03 081 6101 000	100
	9	14 03 091 6101 000	100
	10	14 03 101 6101 000	100
	11	14 03 111 6101 000	100
	12	14 03 121 6101 000	100
	13	14 03 131 6101 000	50
	14	14 03 141 6101 000	50
	15	14 03 151 6101 000	50
	16	14 03 161 6101 000	50
	17	14 03 171 6101 000	50
	18	14 03 181 6101 000	50

PCB terminal blocks,
vertical with push-in-spring-cage termination
for wave soldering
pitch 5.00 mm

Drawing

Dimensions in mm

Dimensions

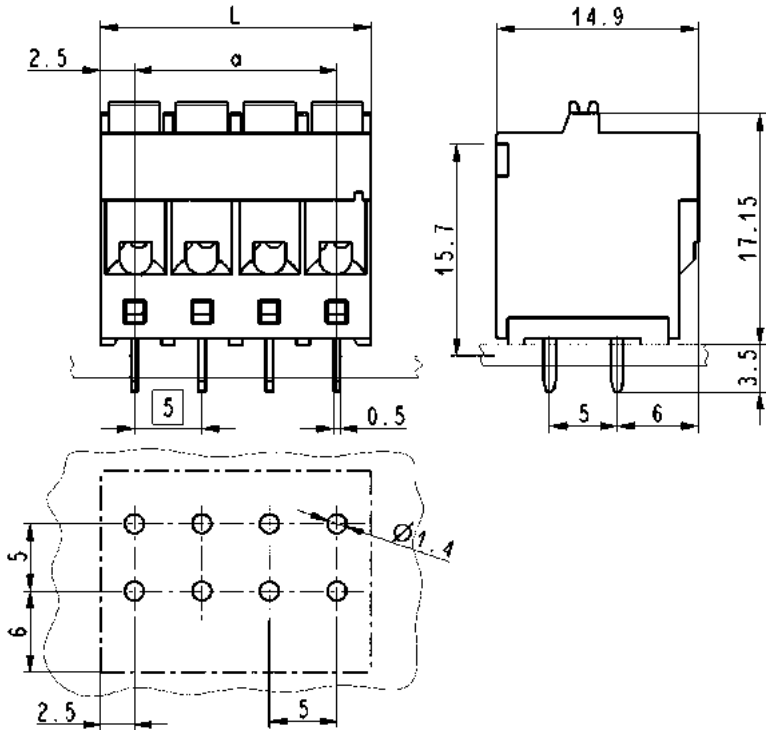

L = pitch x poles
a = pitch x (poles - 1)

Technical characteristics

Technical data

Rated current	12 A
Pitch	5.00 mm

Surge voltage category / pollution degree	III/3	III/2	II/2
Rated voltage	300 V	300 V	600 V
Rated surge voltage	4 kV	4 kV	4 kV

Material data

Group of insulation material	I
Type of insulation material	PA
Flammability rating per UL 94	V0
Operating temperature	-40 °C … +110 °C
Contact material	copper alloy
Contact plating	tin plated
	UL approval (E 102079)

Conductor and solder pin data

Connection technology wire	push-in-spring-cage termination
Conductor size solid / stranded stranded with ferrules without / with plastic sleeve	 0.2 - 2.5 / 0.2 - 2.5 mm² 0.5 - 2.5 / 0.5 - 2.5 mm²
Conductor size AWG	30 - 12
Stripping length	10 mm
Solder pin: drilled hole diameter	1.4 mm

Approval data (UL)

Use group	B	C	D
Rated voltage	300 V	–	300 V
Rated current	12 A	–	12 A

PCB terminal blocks,
vertical with push-in-spring-cage termination
for reflow soldering
pitch 5.00 mm

Identification	No. of contacts	Part number		Packaging unit (pieces)
PCB terminal blocks, stackable, vertical with push-in-spring-cage termination				
	2	14 02 021 6101	. . .	100
	3	14 02 031 6101	. . .	100
	4	14 02 041 6101	. . .	75

for samples (1 piece)
for a packaging unit 333 000

PCB terminal blocks,
vertical with push-in-spring-cage termination
for reflow soldering
pitch 5.00 mm

Drawing

Dimensions in mm

Dimensions

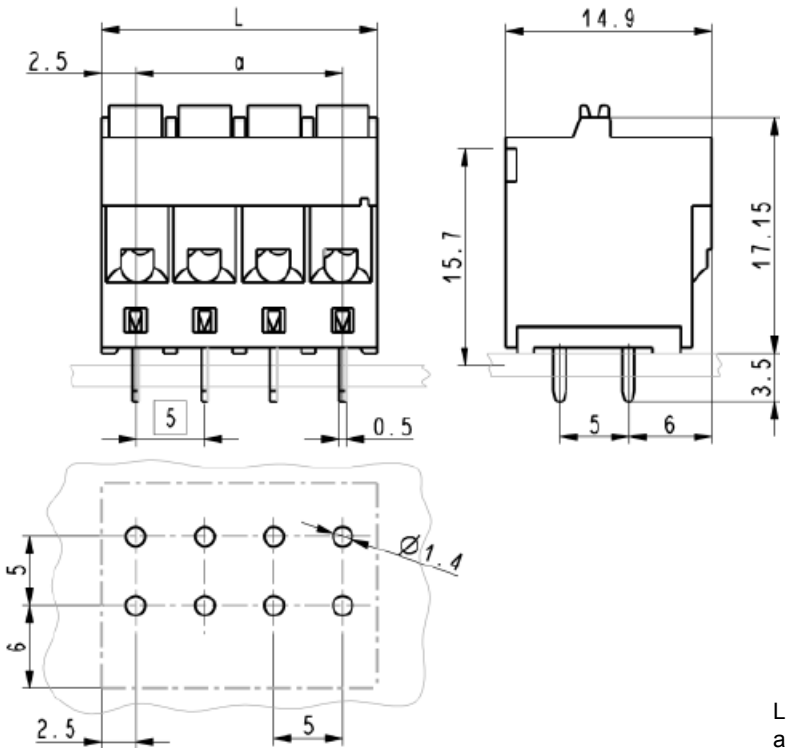

L = pitch x poles
a = pitch x (poles - 1)

Technical characteristics

Technical data

Rated current	12 A
Pitch	5.00 mm

Surge voltage category / pollution degree	III/3	III/2	II/2
Rated voltage	300 V	300 V	600 V
Rated surge voltage	4 kV	4 kV	4 kV

Material data

Group of insulation material	I
Type of insulation material	PA / PPA
Flammability rating per UL 94	V0
Operating temperature	-40 °C … +110 °C
Contact material	copper alloy
Contact plating	tin plated
	UL approval (E 102079)

Conductor and solder pin data

Connection technology wire	push-in-spring-cage termination
Conductor size	
solid / stranded	0.2 - 2.5 / 0.2 - 2.5 mm²
stranded with ferrules without / with plastic sleeve	0.5 - 2.5 / 0.5 - 2.5 mm²
Conductor size AWG	30 - 12
Stripping length	10 mm
Solder pin: drilled hole diameter	1.4 mm

Approval data (UL)

Use group	B	C	D
Rated voltage	300 V	–	300 V
Rated current	12 A	–	12 A

PCB terminal blocks,
horizontal with screw termination
for reflow soldering
pitch 5.00 mm

Identification	No. of contacts	Part number	Packaging unit (pieces)
PCB terminal blocks, horizontal with screw termination			
for wire gauge 2.5 mm²	2	14 02 021 6404 . . .	100
	3	14 02 031 6404 . . .	100
	4	14 02 041 6404 . . .	75
	5	14 02 051 6404 . . .	75
	6	14 02 061 6404 . . .	50
	7	14 02 071 6404 . . .	50
	8	14 02 081 6404 . . .	50

for samples (1 piece)
for a packaging unit 333 000

PCB terminal blocks,
horizontal with screw termination
for reflow soldering
pitch 5.00 mm

Drawing

Dimensions in mm

Dimensions

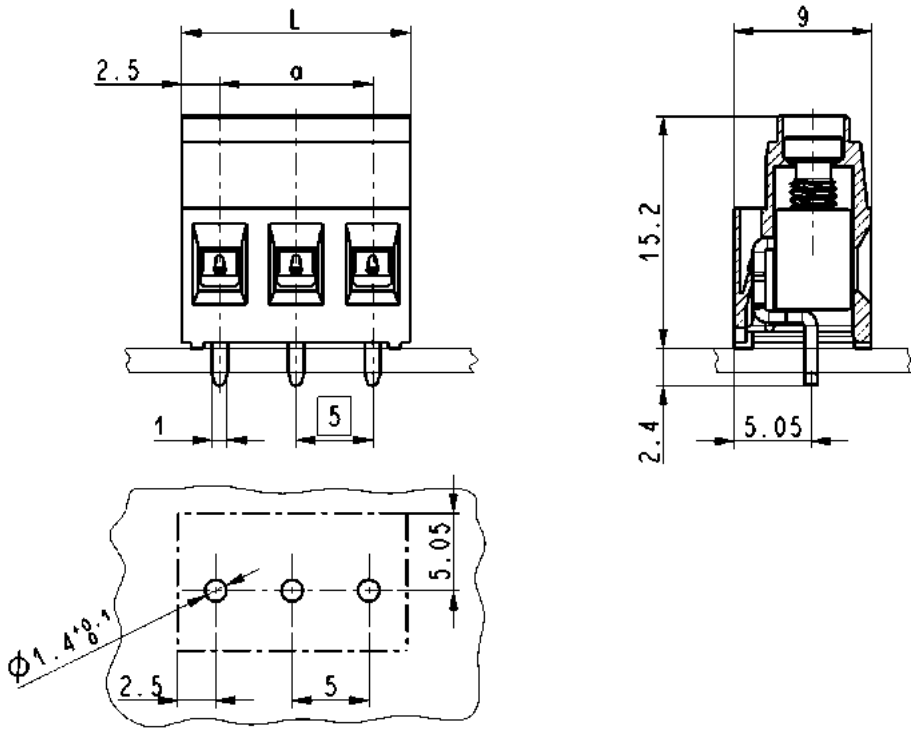

L = pitch x poles
a = pitch x (poles - 1)

Technical characteristics

Technical data

Rated current	17.5 A
Pitch	5.00 mm

Surge voltage category / pollution degree	III/3	III/2	II/2
Rated voltage	300 V	300 V	600 V
Rated surge voltage	4 kV	4 kV	4 kV

Conductor and solder pin data

Connection technology wire	screw termination
Conductor size solid / stranded stranded with ferrules without / with plastic sleeve	 0.05 - 2.5 / 0.05 - 2.5 mm² 0.50 - 2.5 / 0.10 - 2.5 mm²
Conductor size AWG	30 - 12
Screw thread	M3
Tightening torque	0.5 - 0.6 Nm
Stripping length	5.5 - 6.5 mm
Solder pin: drilled hole diameter	1.4 mm

Material data

Group of insulation material	I
Type of insulation material	PA / PPA
Flammability rating per UL 94	V0
Operating temperature	-40 °C … +110 °C
Contact material	copper alloy
Contact plating	tin plated
	UL approval (E 102079)

Approval data (UL)

Use group	B	C	D
Rated voltage	300 V	–	300 V
Rated current	17.5 A	–	17.5 A

PCB terminal blocks, horizontal with screw termination for reflow soldering pitch 5.00 mm

Identification	No. of contacts	Part number	Packaging unit (pieces)
PCB terminal blocks, horizontal with screw termination			
for wire gauge 1.5 mm²	2	14 02 021 6402 . . .	100
	3	14 02 031 6402 . . .	100
	4	14 02 041 6402 . . .	75
	5	14 02 051 6402 . . .	75
	6	14 02 061 6402 . . .	50
	7	14 02 071 6402 . . .	50
	8	14 02 081 6402 . . .	50
	9	14 02 091 6402 . . .	50
	10	14 02 101 6402 . . .	50
	11	14 02 111 6402 . . .	50
	12	14 02 121 6402 . . .	50

for samples (1 piece) 333
for a packaging unit 000

PCB terminal blocks,
horizontal with screw termination
for reflow soldering
pitch 5.00 mm

Drawing

Dimensions in mm

Dimensions

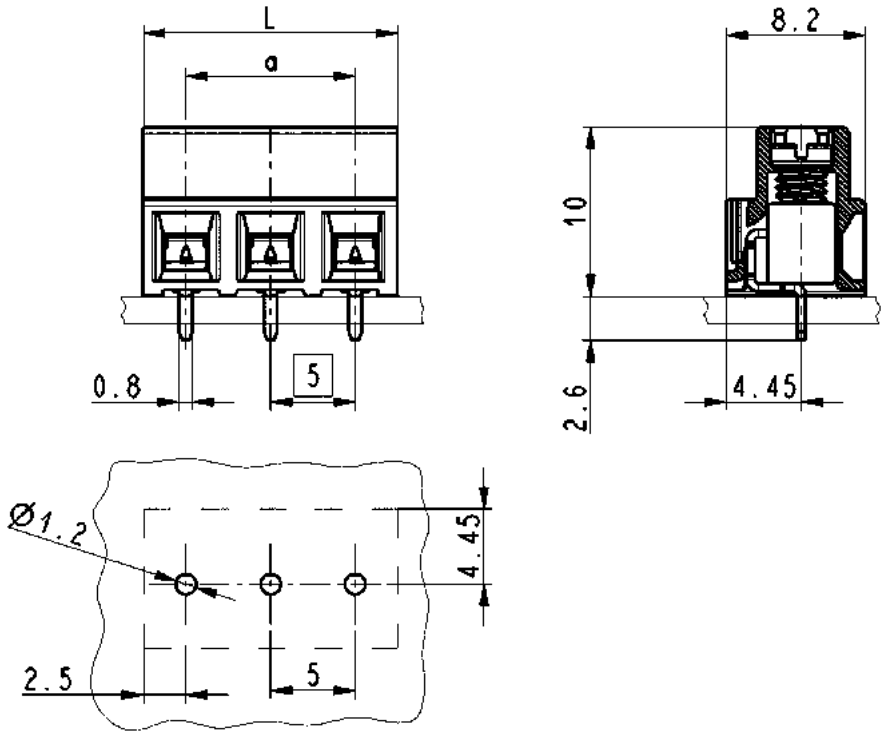

L = pitch x poles
a = pitch x (poles - 1)

Technical characteristics

Technical data

Rated current	13.5 A
Pitch	5.00 mm

Surge voltage category / pollution degree	III/3	III/2	II/2
Rated voltage	220 V	300 V	600 V
Rated surge voltage	4 kV	4 kV	4 kV

Conductor and solder pin data

Connection technology wire	screw termination
Conductor size solid / stranded stranded with ferrules without / with plastic sleeve	 0.05 - 1.5 / 0.05 - 1.0 mm² 0.50 - 1.5 / 0.10 - 1.5 mm²
Conductor size AWG	30 - 16
Screw thread	M3
Tightening torque	0.5 - 0.6 Nm
Stripping length	5.0 - 6.0 mm
Solder pin: drilled hole diameter	1.2 mm

Material data

Group of insulation material	I
Type of insulation material	PA / PPA
Flammability rating per UL 94	V0
Operating temperature	-40 °C … +110 °C
Contact material	copper alloy
Contact plating	tin plated
	UL approval (E 102079)

Approval data (UL)

Use group	B	C	D
Rated voltage	300 V	–	300 V
Rated current	13.5 A	–	13.5 A

PCB connectors female,
horizontal
with push-in-spring-cage termination
pitch 5.00 / 5.08 mm

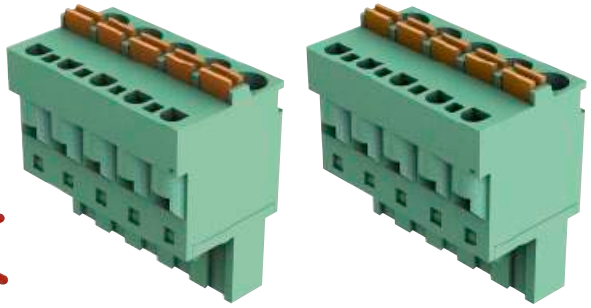

Identification	No. of contacts	Part number	Packaging unit (pieces)
PCB connectors female, horizontal with push-in-spring-cage termination	2	14 31 021 . 102 000	300
	3	14 31 031 . 102 000	200
	4	14 31 041 . 102 000	150
	5	14 31 051 . 102 000	150
	6	14 31 061 . 102 000	100
	7	14 31 071 . 102 000	100
	8	14 31 081 . 102 000	100
	9	14 31 091 . 102 000	100
	10	14 31 101 . 102 000	100
	11	14 31 111 . 102 000	100
	12	14 31 121 . 102 000	100
	13	14 31 131 . 102 000	50
	14	14 31 141 . 102 000	50
	15	14 31 151 . 102 000	50
	16	14 31 161 . 102 000	50
	17	14 31 171 . 102 000	50
	18	14 31 181 . 102 000	50
Please insert digit for pitch 5.00 mm ▶ 6 pitch 5.08 mm ▶ 7			
Coding keys		14 95 000 0052 000	120

PCB connectors female,
horizontal
with push-in-spring-cage termination
pitch 5.00 / 5.08 mm

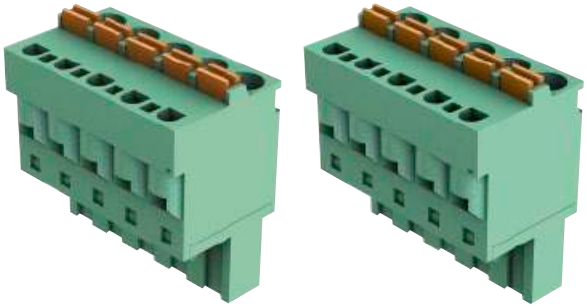

Drawing

Dimensions in mm

Dimensions

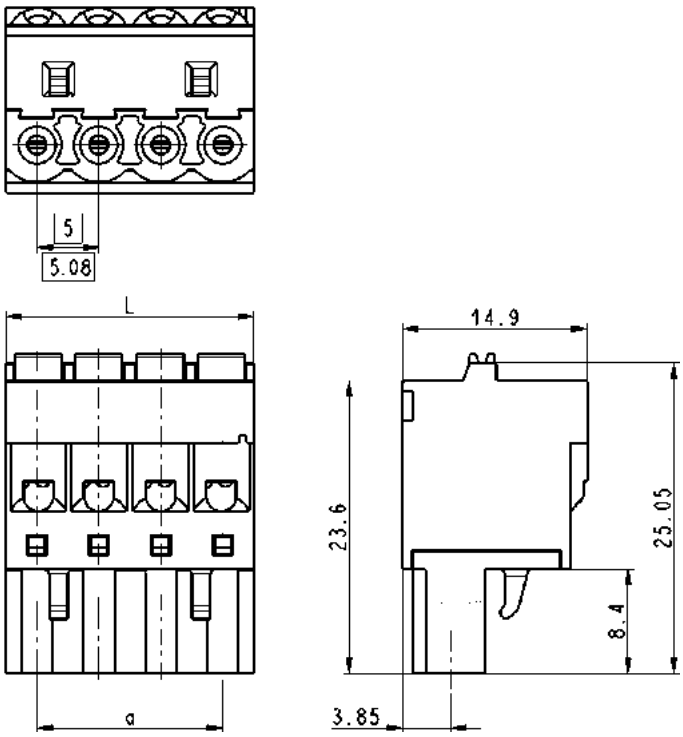

L = pitch x poles
a = pitch x (poles - 1)

Technical characteristics

Technical data

Rated current	12 A
Pitch	5.00 mm / 5.08 mm

Surge voltage category / pollution degree	III/3	III/2	II/2
Rated voltage	250 V	300 V	600 V
Rated surge voltage	4 kV	4 kV	4 kV

Material data

Group of insulation material	I
Type of insulation material	PA / PPA
Flammability rating per UL 94	V0
Operating temperature	-40 °C … +110 °C
Contact material	copper alloy
Contact plating	tin plated
	UL approval (E 102079)

Conductor data

Connection technology wire	push-in-spring-cage termination
Conductor size solid / stranded stranded with ferrules without / with plastic sleeve	 0.2 - 2.5 / 0.2 - 2.5 mm² 0.5 - 2.5 / 0.5 - 2.5 mm²
Conductor size AWG	30 - 12
Stripping length	10 mm

Approval data (UL)

Use group	B	C	D
Rated voltage	300 V	–	300 V
Rated current	12 A	–	12 A

PCB connectors female
with screw flange,
horizontal
with push-in-spring-cage termination
pitch 5.08 mm

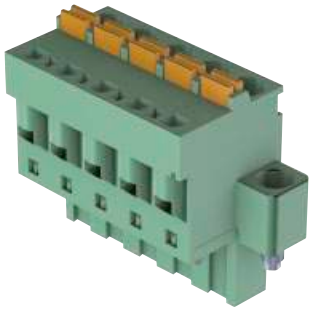

Identification	No. of contacts	Part number	Packaging unit (pieces)
PCB connectors female with screw flange, horizontal with push-in-spring-cage termination	2	14 31 021 7106 000	300
	3	14 31 031 7106 000	200
	4	14 31 041 7106 000	150
	5	14 31 051 7106 000	150
	6	14 31 061 7106 000	100
	7	14 31 071 7106 000	100
	8	14 31 081 7106 000	100
	9	14 31 091 7106 000	100
	10	14 31 101 7106 000	100
	11	14 31 111 7106 000	100
	12	14 31 121 7106 000	100
	13	14 31 131 7106 000	50
	14	14 31 141 7106 000	50
	15	14 31 151 7106 000	50
	16	14 31 161 7106 000	50
	17	14 31 171 7106 000	50
	18	14 31 181 7106 000	50
Coding keys		14 95 000 0052 000	120

PCB connectors female
with screw flange,
horizontal
with push-in-spring-cage termination
pitch 5.08 mm

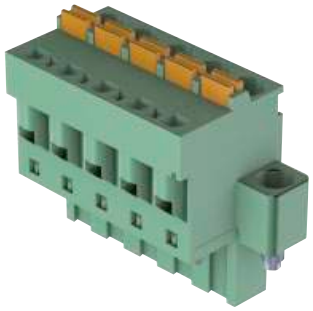

Drawing

Dimensions in mm

Dimensions

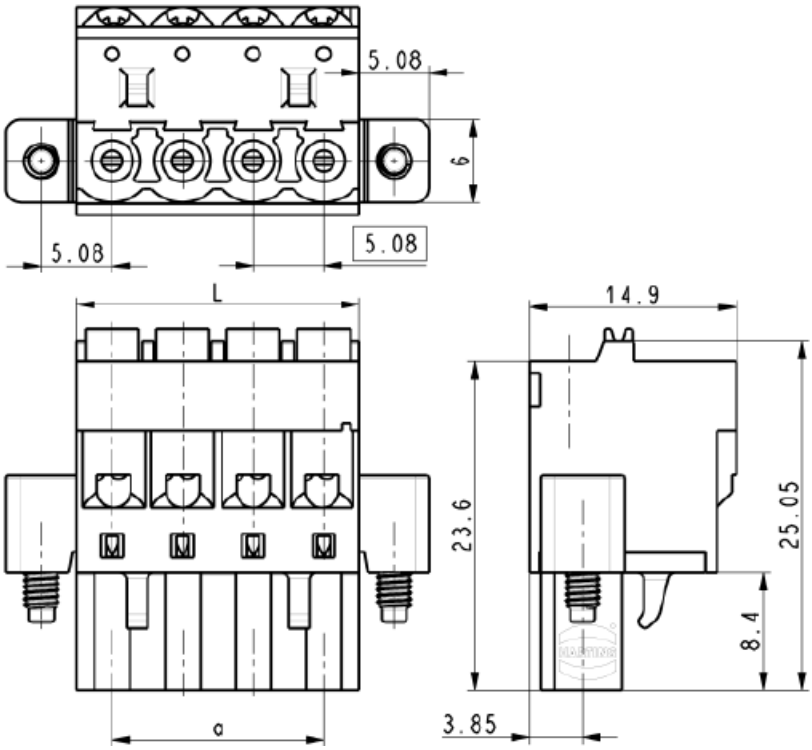

L = pitch x poles
a = pitch x (poles - 1)

Technical characteristics

Technical data

Rated current	12 A
Pitch	5.08 mm

Surge voltage category / pollution degree	III/3	III/2	II/2
Rated voltage	250 V	300 V	600 V
Rated surge voltage	4 kV	4 kV	4 kV

Material data

Group of insulation material	I
Type of insulation material	PA / PPA
Flammability rating per UL 94	V0
Operating temperature	-40 °C … +110 °C
Contact material	copper alloy
Contact plating	tin plated
	UL approval (E 102079)
Screw flange	M2.5

Conductor data

Connection technology wire	push-in-spring-cage termination
Conductor size solid / stranded stranded with ferrules without / with plastic sleeve	 0.2 - 2.5 / 0.2 - 2.5 mm² 0.5 - 2.5 / 0.5 - 2.5 mm²
Conductor size AWG	30 - 12
Stripping length	10 mm

Approval data (UL)

Use group	B	C	D
Rated voltage	300 V	–	300 V
Rated current	12 A	–	12 A

PCB connectors female, vertical / horizontal with screw termination pitch 5.00 / 5.08 mm

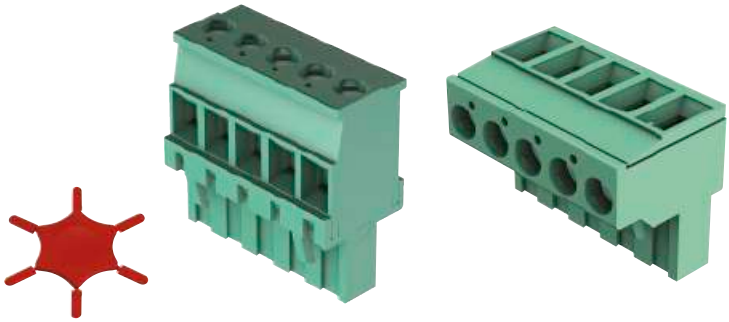

Identification	No. of contacts	Part number	Packaging unit (pieces)
PCB connectors female, vertical / horizontal with screw termination	2	14 31 021 . 40 . 000	300
	3	14 31 031 . 40 . 000	200
	4	14 31 041 . 40 . 000	150
	5	14 31 051 . 40 . 000	150
	6	14 31 061 . 40 . 000	100
	7	14 31 071 . 40 . 000	100
	8	14 31 081 . 40 . 000	100
	9	14 31 091 . 40 . 000	100
	10	14 31 101 . 40 . 000	100
	11	14 31 111 . 40 . 000	100
	12	14 31 121 . 40 . 000	100
	13	14 31 131 . 40 . 000	50
	14	14 31 141 . 40 . 000	50
	15	14 31 151 . 40 . 000	50
	16	14 31 161 . 40 . 000	50
	17	14 31 171 . 40 . 000	50
	18	14 31 181 . 40 . 000	50
	19	14 31 191 . 40 . 000	50
	20	14 31 201 . 40 . 000	50
	21	14 31 211 . 40 . 000	25
	22	14 31 221 . 40 . 000	25
	23	14 31 231 . 40 . 000	25
	24	14 31 241 . 40 . 000	25
	25	14 31 251 . 40 . 000	25

Please insert digit for

pitch 5.00 mm ▶ 6
pitch 5.08 mm ▶ 7

vertical* ▶ 1
horizontal ▶ 2

Coding keys		14 95 000 0052 000	120

* Only available in 5.08 mm pitch

PCB connectors female,
vertical / horizontal
with screw termination
pitch 5.00 / 5.08 mm

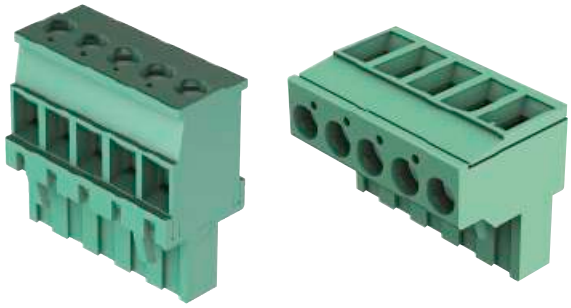

Drawing — Dimensions in mm

Dimensions

vertical

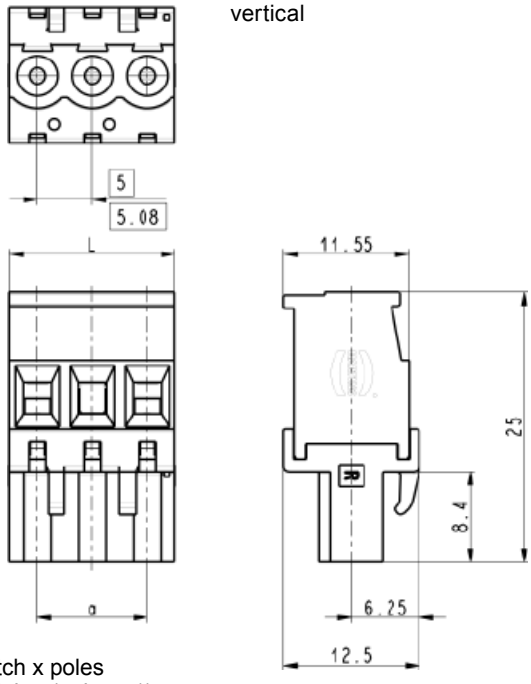

L = pitch x poles
a = pitch x (poles - 1)

horizontal

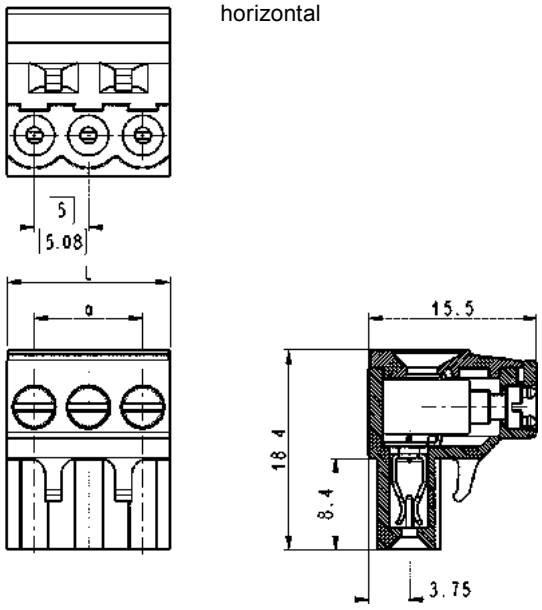

L = pitch x poles
a = pitch x (poles - 1)

Technical characteristics

Technical data

Rated current	15 A
Pitch	5.00 mm / 5.08 mm

Surge voltage category / pollution degree	III/3	III/2	II/2
Rated voltage	250 V	300 V	600 V
Rated surge voltage	4 kV	4 kV	4 kV

Material data

Group of insulation material	I
Type of insulation material	PA / PPA
Flammability rating per UL 94	V0
Operating temperature	-40 °C … +110 °C
Contact material	copper alloy
Contact plating	tin plated
	UL approval (E 102079)

Conductor data

Connection technology wire	screw termination
Conductor size	
solid / stranded	0.05 - 2.5 / 0.05 - 2.5 mm²
stranded with ferrules without / with plastic sleeve	0.50 - 2.5 / 0.10 - 2.5 mm²
Conductor size AWG	30 - 12
Screw thread	M3
Tightening torque	0.5 - 0.6 Nm
Stripping length	6.0 - 7.5 mm

Approval data (UL)

Use group	B	C	D
Rated voltage	300 V	–	300 V
Rated current	15 A	–	15 A

PCB connectors male,
vertical
for wave soldering
pitch 5.00 / 5.08 mm

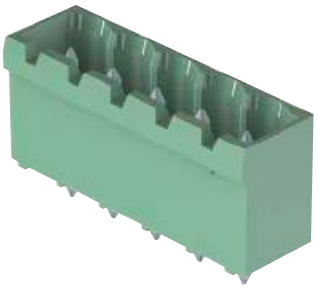

Identification	No. of contacts	Part number	Packaging unit (pieces)
PCB connectors male, vertical			
	2	14 13 021 . 001 000	100
	3	14 13 031 . 001 000	100
	4	14 13 041 . 001 000	75
	5	14 13 051 . 001 000	75
	6	14 13 061 . 001 000	50
	7	14 13 071 . 001 000	50
	8	14 13 081 . 001 000	50
	9	14 13 091 . 001 000	50
	10	14 13 101 . 001 000	50
	11	14 13 111 . 001 000	50
	12	14 13 121 . 001 000	50
Please insert digit for pitch 5.00 mm ▶ 6 pitch 5.08 mm ▶ 7			
Coding keys		14 95 000 0051 000	120

PCB connectors male,
vertical
for wave soldering
pitch 5.00 / 5.08 mm

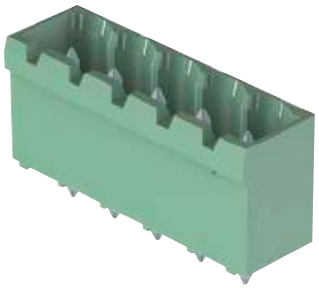

Drawing

Dimensions in mm

Dimensions

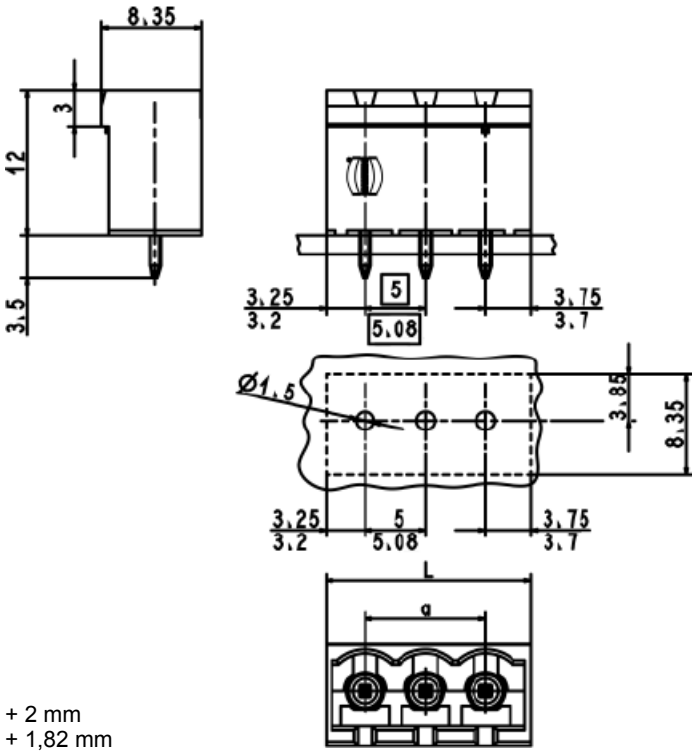

Pitch 5.00 mm: L = (pitch x poles) + 2 mm
Pitch 5.08 mm: L = (pitch x poles) + 1,82 mm

Technical characteristics

Technical data

Rated current	15 A
Pitch	5.00 mm / 5.08 mm

Surge voltage category / pollution degree	III/3	III/2	II/2
Rated voltage	250 V	300 V	600 V
Rated surge voltage	4 kV	4 kV	4 kV

Material data

Group of insulation material	I
Type of insulation material	PA
Flammability rating per UL 94	V0
Operating temperature	-40 °C … +110 °C
Contact material	copper alloy
Contact plating	tin plated
	UL approval (E 102079)

Solder pin data

Solder pin: drilled hole diameter	1.5 mm

Approval data (UL)

Use group	B	C	D
Rated voltage	300 V	–	300 V
Rated current	15 A	–	15 A

PCB connectors male, vertical/horizontal for reflow soldering pitch 5.00 / 5.08 mm

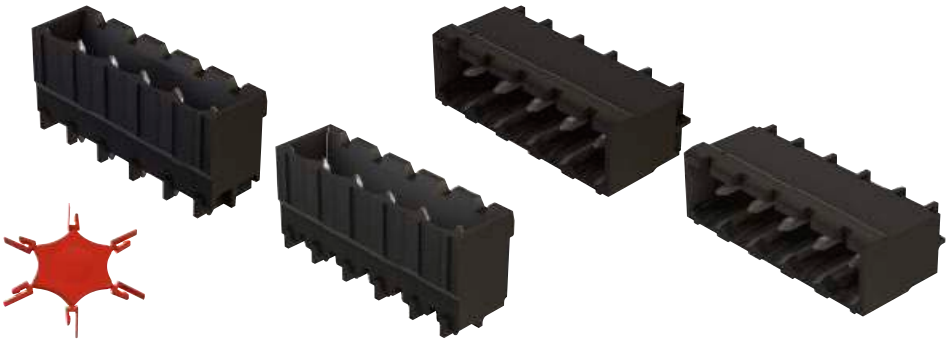

Identification	No. of contacts	Part number	Packaging unit (pieces)
PCB connectors male, vertical/horizontal			
	2	14 12 021 . 00	100
	3	14 12 031 . 00	100
	4	14 12 041 . 00	75
	5	14 12 051 . 00	75
	6	14 12 061 . 00	50
	7	14 12 071 . 00	50
	8	14 12 081 . 00	50
	9	14 12 091 . 00	50
	10	14 12 101 . 00	50
	11	14 12 111 . 00	50
	12	14 12 121 . 00	50
	13	14 12 131 . 00	50
	14	14 12 141 . 00	50
	15	14 12 151 . 00	50
	16	14 12 161 . 00	50
	17	14 12 171 . 00	50
	18	14 12 181 . 00	50
	19	14 12 191 . 00	50
	20*	14 12 201 . 00	50

Please insert digit for

pitch 5.00 mm ▶	6
pitch 5.08 mm ▶	7
vertical ▶	1
horizontal ▶	2

Coding keys	14 95 000 0051 000	120

* Not available in pitch 5.00 mm (horizontal)

for samples (1 piece) / for a packaging unit 333 000

PCB connectors male,
vertical/horizontal
for reflow soldering
pitch 5.00 / 5.08 mm

Drawing

Dimensions in mm

Dimensions

vertical

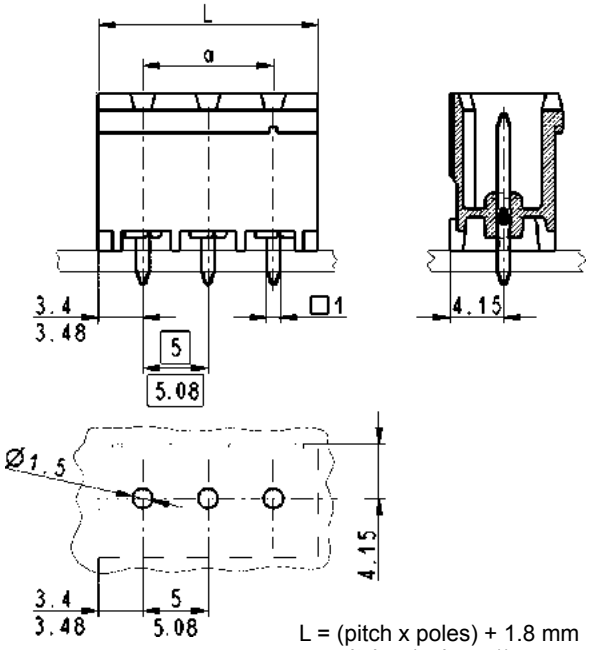

L = (pitch x poles) + 1.8 mm
a = pitch x (poles - 1)

horizontal

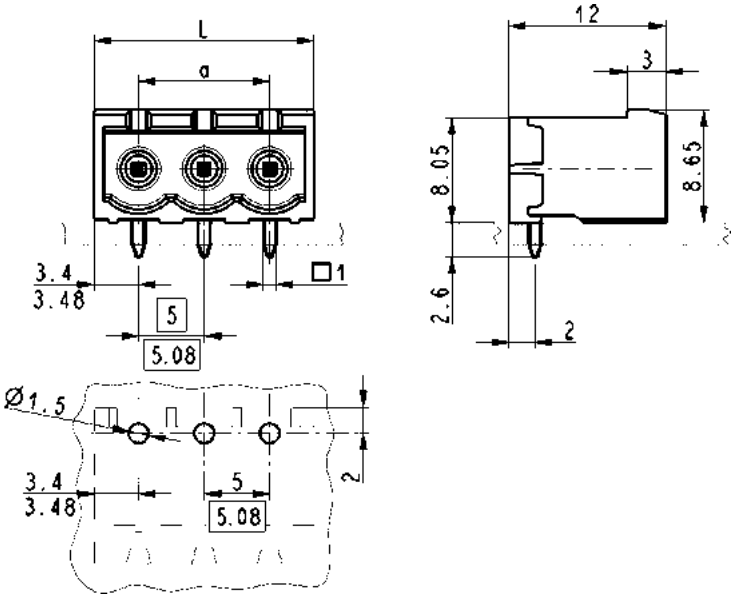

L = (pitch x poles) + 1.8 mm
a = pitch x (poles - 1)

Technical characteristics

Technical data

Rated current	15 A
Pitch	5.00 mm / 5.08 mm

Surge voltage category / pollution degree	III/3	III/2	II/2
Rated voltage	250 V	300 V	600 V
Rated surge voltage	4 kV	4 kV	4 kV

Material data

Group of insulation material	I
Type of insulation material	PA / PPA
Flammability rating per UL 94	V0
Operating temperature	-40 °C … +110 °C
Contact material	copper alloy
Contact plating	tin plated
	UL approval (E 102079)

Solder pin data

Solder pin: drilled hole diameter	1.5 mm

Approval data (UL)

Use group	B	C	D
Rated voltage	300 V	–	300 V
Rated current	15 A	–	15 A

PCB connectors male with thread flange, vertical/horizontal for reflow soldering pitch 5.08 mm

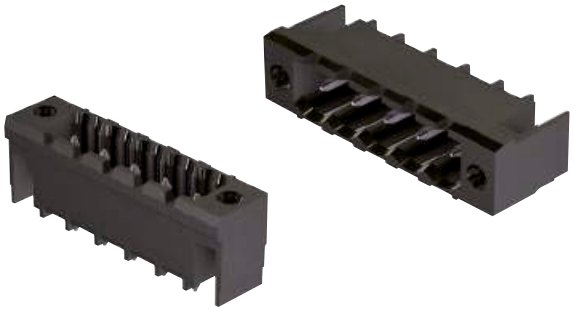

Identification	No. of contacts	Part number	Packaging unit (pieces)
PCB connectors male with thread flange, vertical/horizontal	2	14 12 021 700 . . .	100
	3	14 12 031 700 . . .	100
	4	14 12 041 700 . . .	75
	5	14 12 051 700 . . .	75
	6	14 12 061 700 . . .	50
	7	14 12 071 700 . . .	50
	8	14 12 081 700 . . .	50
	9	14 12 091 700 . . .	50
	10	14 12 101 700 . . .	50
	11	14 12 111 700 . . .	50
	12	14 12 121 700 . . .	50
	13	14 12 131 700 . . .	50
	14	14 12 141 700 . . .	50
	15	14 12 151 700 . . .	50
	16	14 12 161 700 . . .	50
	17	14 12 171 700 . . .	50
	18	14 12 181 700 . . .	50
Please insert digit for vertical ▶ 5 horizontal ▶ 6			
Coding keys		14 95 000 0051 000	120

for samples (1 piece) / for a packaging unit 333 000

PCB connectors male
with thread flange,
vertical/horizontal
for reflow soldering
pitch 5.08 mm

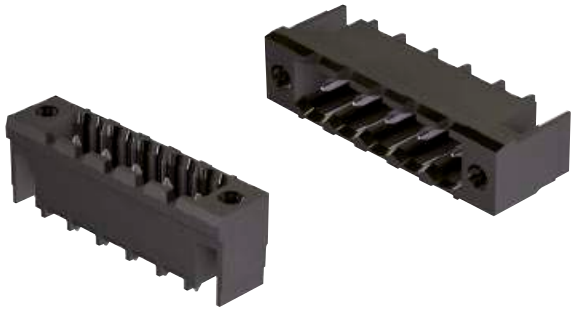

Drawing

Dimensions in mm

Dimensions

vertical

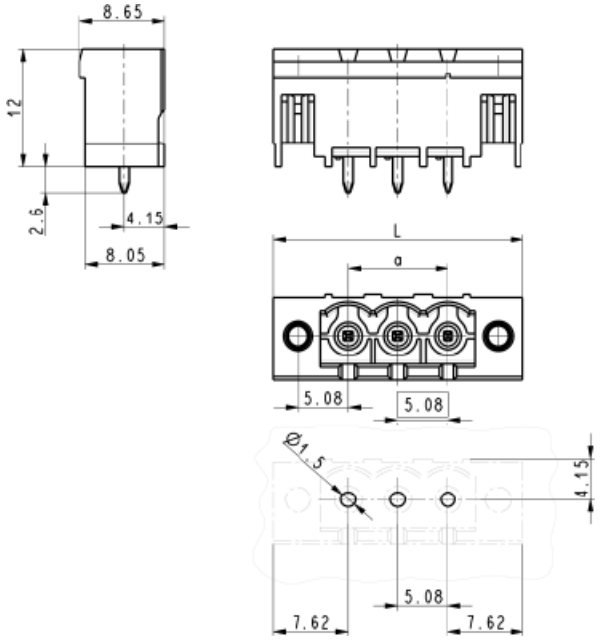

L = pitch x (poles + 2)
a = pitch x (poles - 1)

horizontal

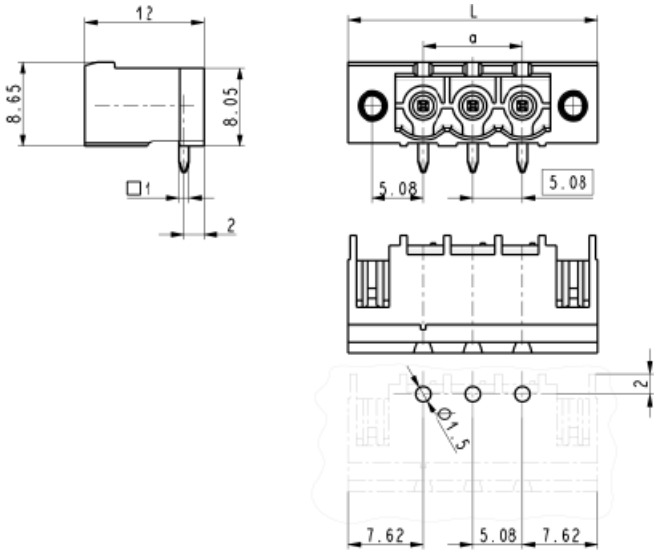

L = pitch x (poles + 2)
a = pitch x (poles - 1)

Technical characteristics

Technical data

Rated current	15 A
Pitch	5.08 mm

Surge voltage category / pollution degree	III/3	III/2	II/2
Rated voltage	250 V	300 V	600 V
Rated surge voltage	4 kV	4 kV	4 kV

Material data

Group of insulation material	I
Type of insulation material	PA / PPA
Flammability rating per UL 94	V0
Operating temperature	-40 °C … +110 °C
Contact material	copper alloy
Contact plating	tin plated
	UL approval (E 102079)
Thread flange	M2.5

Solder pin data

Solder pin: drilled hole diameter	1.4 mm

Approval data (UL)

Use group	B	C	D
Rated voltage	300 V	–	300 V
Rated current	15 A	–	15 A

PCB terminal blocks,
horizontal with screw termination
10 mm² / 25 mm²
for reflow soldering
pitch 10.16 / 15.00 mm

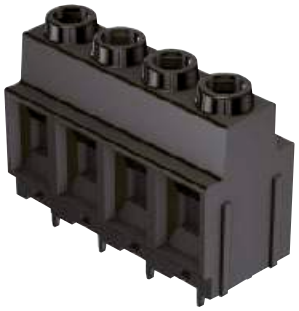

Identification	No. of contacts	Part number	Packaging unit (pieces)
PCB terminal blocks, stackable horizontal with screw termination			
For wire gauge 10 mm² Pitch 10.16 mm 600 V 60 A	2	14 02 022 5402 000	50
	3	14 02 032 5402 000	50
	4	14 02 042 5402 000	40
For wire gauge 25 mm² Pitch 15.00 mm 600 V 135 A	2	14 02 022 7402 000	50
	3	14 02 032 7402 000	40
	4	14 02 042 7402 000	30

Approval data (UL)

Use group		B	C	D
Rated voltage	Pitch 10.16 mm	300 V	300 V	600 V
	Pitch 15.00 mm	600 V	600 V	–
Rated current	Pitch 10.16 mm	60 A	60 A	60 A
	Pitch 15.00 mm	135 A	135 A	–

PCB terminal blocks,
horizontal with screw termination
10 mm² / 25 mm²
for reflow soldering
pitch 10.16 / 15.00 mm

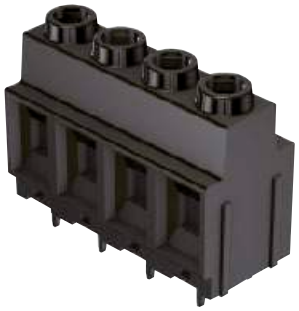

Drawing

Dimensions in mm

Dimensions

Pitch 10.16 mm

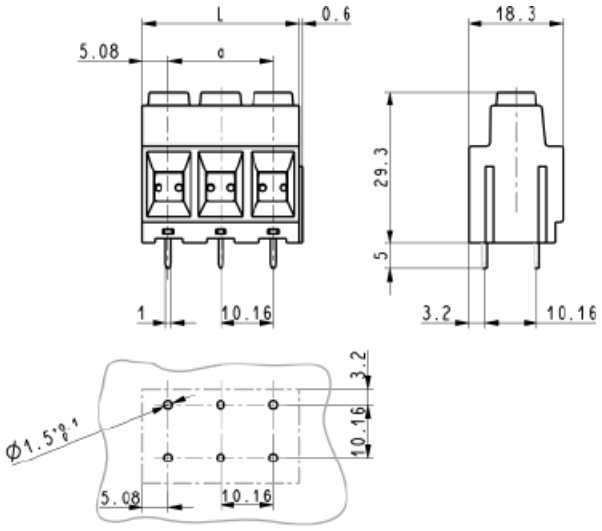

L = pitch x poles
a = pitch x (poles - 1)

Pitch 15.00 mm

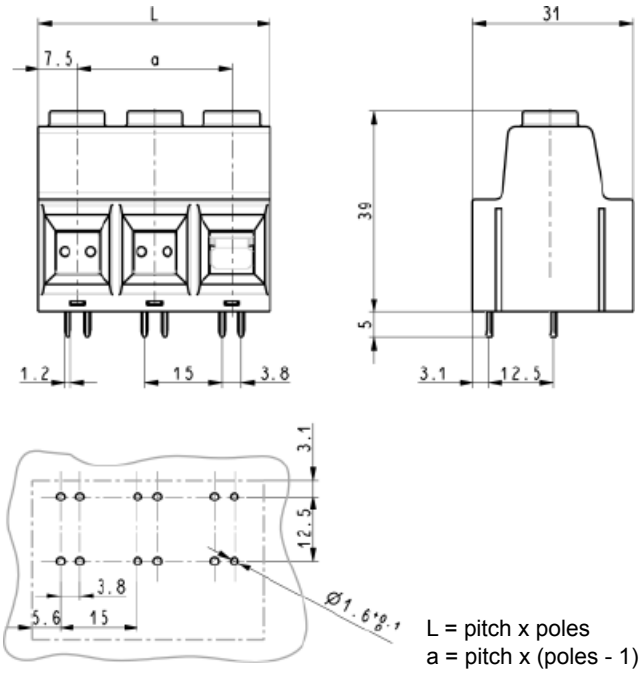

L = pitch x poles
a = pitch x (poles - 1)

Technical characteristics

Technical data

Rated current	60 / 135 A
Pitch	10.16 / 15.00 mm

Surge voltage category / pollution degree	III/3	III/2	II/2
Rated voltage	1 kV	1 kV	1 kV
Rated surge voltage	8 kV	8 kV	8 kV

Material data

Group of insulation material	I
Type of insulation material	PA / PPA
Flammability rating per UL 94	V0
Operating temperature	-40 °C … +110 °C
Contact material	copper alloy
Contact plating	tin plated
	UL approval (E 102079)

Conductor and solder pin data

	Pitch 10.16 mm	Pitch 15.00 mm
Connection technology wire	screw termination	screw termination
Conductor size		
solid / stranded	0.5 - 16 / 0.5 - 10 mm²	0.5 - 35 / 0.5 - 25 mm²
stranded with ferrules without / with plastic sleeve	0.5 - 6 / 0.5 - 6 mm²	0.5 - 16 / 0.5 - 16 mm²
Conductor size AWG	20 - 6	20 - 1
Screw thread	M4	M5
Tightening torque	1.2 - 1.5 Nm	2.1 - 2.5 Nm
Stripping length	11 mm	18 mm
Solder pin: drilled hole diameter	min. 1.5 mm	min. 1.6 mm

20. Tools

Basic element for a reliable connection is besides the quality of the connector the right choice of the assembly tool.
HARTING offers the corresponding tools to all connectors. On the following catalogue pages you find information about tools for crimp, press-in and IDC termination. There are tools available for different levels of automation. The choice varies from pure hand tools for small series or service up to fully automatic assembly tools for high volume series production.

Contents

	Page
Tools for crimp contacts	**20.02**
Crimp tools for screened hoods	**20.25**
Tools for press-in contacts	**20.26**
Tools for insulation displacement contacts	**20.41**
Tools for FOC contacts	**20.45**

Tools for crimp contacts

Tools for contacts **Han D®** (09 15 ...)

Identification	Part number	Drawing	Dimensions in mm
HARTING Service crimping tool with locator set for Han D®, Han E®	**09 99 000 0021**	Wire gauge Han D® 0.14 ... 1.5 mm²	
BUCHANAN crimping tool	**09 99 000 0888**	Wire gauge 0.14 ... 2.5 mm²	
HARTING crimping tool with locator for Han D®, Han E®, Han® C	**09 99 000 0110**	Wire gauge Han D® 0.14 ... 1.5 mm²	
HARTING Pneumatic crimping tool CP 600	09 99 000 0810		
Crimp die Han D®, Han E®, Han® C	09 99 000 0813	Wire gauge Han D® 0.14 ... 1.5 mm²	
Footswitch	09 99 000 0811		
Table fixing	09 99 000 0812		

[1] For wire gauge 0.14 and 0.25 mm² use only male contact 09 15 000 6107 or female contact 09 15 000 6207.

Stock items in bold type

Tools for contacts **Han D®** (09 15 ...)

Identification	Part number	Drawing	Dimensions in mm
Insertion tool for crimp contacts	**09 99 000 0059**	For crimp contacts with wires of less than 0.75 mm² it is recommended that an insertion tool is used. Contacts should be inserted from the wiring side and pushed down until a positive locking is achieved.	
Removal tool for crimp contacts			
Removal tool	**09 99 000 0012**		
Replacement-tip for removal tool	**09 99 000 0004**		
Removal tool	**09 99 000 0052**	A removal tool is necessary if contacts are to be replaced in the insert. It is inserted from the mating face and pushed over the contact until a stop is noticeable. Additional pressure unlocks the contact and pushes it out of the wiring side. In case of the removal tool (. . 0052) the unlocking process is achieved by pressure on the central rod.	

Stock items in bold type

Tools for crimp contacts

Tools for contacts **Han E®** (09 33 ...)

Identification	Part number	Drawing	Dimensions in mm
HARTING Service crimping tool with locator set for Han D®, Han E®	**09 99 000 0021**	Wire gauge Han E® 0.5 ... 2.5 mm²	
BUCHANAN crimping tool	**09 99 000 0888**	Wire gauge 0.14 ... 4 mm²	
HARTING crimping tool with locator for Han D®, Han E®, Han® C	**09 99 000 0110**	Wire gauge Han E® 0.5 ... 4 mm²	
HARTING Pneumatic crimping tool CP 600	09 99 000 0810		
Crimp die Han D®, Han E®, Han® C	09 99 000 0813	Wire gauge Han E® 0.5 ... 4 mm²	
Footswitch	09 99 000 0811		
Table fixing	09 99 000 0812		

Stock items in bold type

Tools for crimp contacts

Tools for contacts **Han E®** (09 33 ...)

Identification	Part number	Drawing	Dimensions in mm
Insertion tool for crimp contacts	**09 99 000 0059**	For crimp contacts with wires of less than 0.75 mm² it is recommended that an insertion tool is used. Contacts should be inserted from the wiring side and pushed down until a positive locking is achieved.	
Insertion tool for Han® ES inserts	09 99 000 0367		
Removal tool for crimp contacts for Han® EE, Han® Q 5/0, Han® Q 8/0, Han E®, Han-*Yellock*® and Han A®	**09 99 000 0319**	A removal tool is necessary if contacts are to be replaced in the insert. The tool is inserted from the wiring side until a stop is noticeable. The wire with the crimp contact can then be pulled out from the same side of the insert.	

Stock items in bold type

Tools for crimp contacts

Tools for contacts **Han® C** (09 32 ...)

Identification	Part number	Drawing	Dimensions in mm
BUCHANAN crimping tool	**09 99 000 0888**	Wire gauge 0.14 ... 4 mm²	
HARTING crimping tool with locator for Han D®, Han E®, Han® C	**09 99 000 0110**	Wire gauge Han® C 1.5 ... 4 mm²	
HARTING crimping tool with locator for Han® C	09 99 000 0303	Wire gauge 4 ... 6 mm²	
Locator as spare part	09 99 000 0304		
HARTING crimping tool for Han® C	09 99 000 0377	Wire gauge 6 ... 10 mm²	
HARTING Pneumatic crimping tool CP 600			
Crimp die Han® C	09 99 000 0810		
	09 99 000 0813	Wire gauge Han® C 1.5 ... 4 mm²	
Crimp die Han® C	09 99 000 0814	Wire gauge Han® C 6 ... 10 mm²	
Footswitch	09 99 000 0811		
Table fixing	09 99 000 0812		

Stock items in bold type

Tools for contacts **Han® C** (09 32 ...)

Identification	Part number	Drawing	Dimensions in mm
Removal tool for crimp contacts			
Removal tool			
1.5 ... 6 mm²	**09 99 000 0305**		
10 mm²	**09 99 000 0381**		

A removal tool is necessary to remove the contacts. For each „C“ contact cavity, the location of the internal locking levers are marked on the wiring side with two black arcs. The sides of the tool must be first properly aligned so that the edges of the tool engage both levers simultaneously and then inserted until a stop is noticeable ①. Once it has been inserted, the tool must not be turned. The wire together with the tool can then be pulled out from the wiring side of the insert ②.

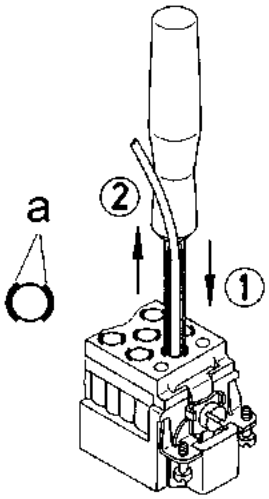

a ... lever marking

Stock items in bold type

Tools for crimp contacts

Overview Han® crimping tools

Crimp contacts Series	Part number				mm²	AWG	Crimping tools						Tools	
	male contact silver plated	female contact silver plated	male contact silver plated	female contact gold plated			09 99 000 0888	09 99 000 0110	09 99 000 0021	09 99 000 0303	09 99 000 0377	20 99 000 1035	removal tools	
Han D® Signal contacts 09 15 000	6107	6207	6127	6227	0.14 - 0.25	26 - 24	x						09 99 000 0012	09 99 000 0052
	6104	6204	6124	6224				x	x					
	6107	6207	6127	6227	0.37	22	x							
	6104	6204	6124	6224			x	x	x					
	6103	6203	6123	6223	0.5	20	x	x	x					
	6105	6205	6125	6225	0.75	18	x	x	x					
	6102	6202	6122	6222	1.0	18	x	x	x					
	6101	6201	6121	6221	1.5	16	x	x	x					
	6106	6206	6126	6226	2.5	14	x							
Han D® F.O. contacts 20 10 001	Male contact 3211 3212 / 3213		Female contact 3221 3222		1 mm POF							x		
Han E® Power contacts 09 33 000	6127	6227	6117	6217	0.14 - 0.37	26 - 22	x						09 99 000 0319	
	6121	6220	6122	6222	0.5	20	x	x	x					
	6114	6214	6115	6215	0.75	18	x	x	x					
	6105	6205	6118	6218	1.0	18	x	x	x					
	6104	6204	6116	6216	1.5	16	x	x	x					
	6102	6202	6123	6223	2.5	14	x	x	x					
	6106	6206			3.0	12	x	x						
	6107	6207	6119	6221	4.0	12	x	x						
Han E® F.O. contacts 20 10 001	Male contact 3311		Female contact 3321		1 mm POF							x		
Han-*Yellock*® Power contacts 11 05 000	6101	6201	6121	6221	0.14 - 0.37	26 - 22	x						09 99 000 0319	
	6102	6202	6122	6222	0.5	20	x	x	x					
	6103	6203	6123	6223	0.75	18	x	x	x					
	6104	6204	6124	6224	1.0	18	x	x	x					
	6105	6205	6125	6225	1.5	16	x	x	x					
	6106	6206	6126	6226	2.5	14	x	x	x					
	6107	6207	6127	6227	3.0	12	x	x						
	6108	6208	6128	6228	4.0	12	x	x						
Han® C Power contacts 09 32 000	6104	6204			1.5	16	x	x					09 99 000 0305	09 99 000 0381[1]
	6105	6205			2.5	14	x	x						
	6107	6207			4.0	12	x	x		x				
	6108	6208			6.0	10				x	x			
	6109	6209			10.0	8					x			
Description														
Locator Han D®	09 99 000 0022								x					
Locator Han E®	09 99 000 0022								x					
Locator Han-*Yellock*®	09 99 000 0341							x						
	09 99 000 0343								x					
Locator Han® C	09 99 000 0304									x				
Locator Han D®, Han E® and Han® C	09 99 000 0376							x						

[1] for Han® C power contacts, 10 mm²

Overview Han® crimping tools

Crimp contacts Series	Part number				mm²	AWG	Crimping machines										
	male contact silver plated	female contact silver plated	male contact silver plated	female contact gold plated			09 99 000 0813 [3]	09 99 000 0814 [3]	09 98 000 6901 [1]	09 98 000 6902 [1]	09 98 000 8101	09 98 000 8102	09 98 000 8103	09 98 000 8107 [5]	09 98 000 9001	09 98 000 9002	09 98 000 9003
Han D® Signal contacts 09 15 000	6107	6207	6127	6227	0.14 - 0.25	26 - 24			x[6]		x[6]				x		
	6104	6204	6124	6224			x										
	6107	6207	6127	6227	0.37	22			x		x				x		
	6104	6204	6124	6224			x		x		x				x		
	6103	6203	6123	6223	0.5	20	x		x		x				x		
	6105	6205	6125	6225	0.75	18	x		x		x				x		
	6102	6202	6122	6222	1.0	18	x		x		x				x		
	6101	6201	6121	6221	1.5	16	x		x		x				x		
	6106	6206	6126	6226	2.5	14			x		x				x		
Han E® Power contacts 09 33 000	6127	6227	6117	6217	0.14 - 0.37	26 - 22				x[6]		x[6]				x	
	6121	6220	6122	6222	0.5	20	x			x		x				x	
	6114	6214	6115	6215	0.75	18	x			x		x				x	
	6105	6205	6118	6218	1.0	18	x			x		x				x	
	6104	6204	6116	6216	1.5	16	x			x		x				x	
	6102	6202	6123	6223	2.5	14	x			x		x				x	
	6106	6206			3.0	12	x			x		x				x	
	6107	6207	6119	6221	4.0	12	x			x		x				x	
Han-*Yellock*® Power contacts 11 05 000	6101	6201	6121	6221	0.14 - 0.37	26 - 22								x[6]			
	6102	6202	6122	6222	0.5	20	x							x			
	6103	6203	6123	6223	0.75	18	x							x			
	6104	6204	6124	6224	1.0	18	x							x			
	6105	6205	6125	6225	1.5	16	x							x			
	6106	6206	6126	6226	2.5	14	x							x			
	6107	6207	6127	6227	3.0	12	x										
	6108	6208	6128	6228	4.0	12	x										
Han® C Power contacts 09 32 000	6104	6204			1.5	16	x						x				x
	6105	6205			2.5	14	x						x				x
	6107	6207			4.0	12	x						x				x
	6108	6208			6.0	10		x					x				x
	6109	6209			10.0	8		x					x				x
Description																	
Locator Han-*Yellock*®	09 99 000 0344						x										

[1] For using changeable units 09 98 000 6901 / 6902 the TK-M basic machine 09 98 000 6900 is required.
[3] For using of tool head the basic unit CP 600 (09 99 000 0810) is required.
[4] Only male contacts
[5] For using changeable units 09 98 000 8101 - 8107 the TC-SC basic machine 09 98 000 8000 is required.
[6] depending on the wire

Crimping machine TC-C01

Features

- ❏ Basic unit in compact construction for pre-stripped wire
- ❏ Simple handling due to ergonomic design
- ❏ For individual, turned male and female contacts
- ❏ Selective processing of male and female HARTING contacts (wire gauge from 0.14 mm² to 10.0 mm², AWG 26 to AWG 8)
- ❏ Automatic contact feed
- ❏ Reproducible, top quality gas-tight crimp connections
- ❏ Non-slip, anti-vibration adjustable feet for setting the height
- ❏ Low noise level
- ❏ Can be transported with carrying handle
- ❏ Removable electric and pneumatic supply connections
- ❏ Maintenance interval counter
- ❏ Minimal setup effort
- ❏ Crimping depth can be set without tools
- ❏ Low maintenance costs
- ❏ Low follow-up costs for maintenance and repair
- ❏ Easy replacement of wearing components

Technical characteristics

Dimensions:	
Height	345 mm
Width	230 mm
Depth	400 mm
Total weight:	app. 24 kg
Local noise level:	62 dB (A)
Electrical connection:	230 V, 50 Hz
Power rating:	0.20 kW
Compressed air connection:	6 bar
Control system:	PLC
Work cycle trigger:	Footswitch
Machine work cycle:	1 second
Crimp type:	Four-point crimping
Contact feed:	Vibratory bowl feed
Stroke counters:	Resettable daily counter and permanent counter

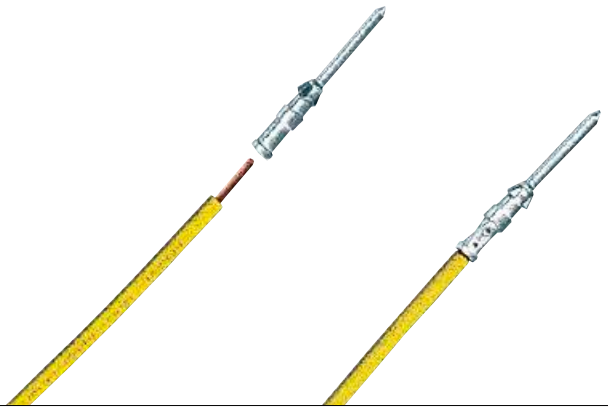

Crimping machine TC-C01

Identification	Part number
Crimping machine TC-C01	
for Han D® contacts	09 98 000 9001
Han E® contacts	09 98 000 9002
Han® C contacts	09 98 000 9003

Included in the delivery

- ❏ Crimping machine TC-C01
  - – with 2.0 m connection cable and grounding plug
  - – with 2.0 m pneumatic hose, quick-release coupling and N6 plug-in nipple
- ❏ Footswitch
- ❏ Carrying handle
- ❏ Operating instructions
- ❏ Declaration of conformity

Options

Pneumatic maintenance unit

Crimping machine TK-M

Features

- ❏ Fast stripping and crimping in one operation
- ❏ Basic unit in compact construction
- ❏ Simple handling because of well-arranged construction with touchscreen controlling
- ❏ For individual, turned male and female contacts (for the HARTING series Han D®, Han E®)
- ❏ Selective processing of male and female contacts (Wire gauge from 0.14 mm² to 4.0 mm², AWG 26 to AWG 12)
- ❏ Contact magazine with filling control
- ❏ Reproducible, top quality gas-tight crimp connections
- ❏ Infinitely variable adjustment parameters
  – Stripping depth
  – Stripping length
  – Crimping depth
  – Crimp contact feed rate
- ❏ Rotatable vibration feeder and actuator in basic unit
- ❏ Low noise level
- ❏ For oil-free compressed air
- ❏ Very low setup effort
- ❏ Low maintenance costs of the modular construction

Technical characteristics

Dimensions:	
Height	580 mm
Width	470 mm
Depth	470 mm
Total weight:	Approx. 60 kg
Local noise level:	< 75 dB (A)
Drive:	Electro-pneumatic
Electrical connection:	230 V, 50 Hz
Power rating:	Approx. 0,75 kW
Pneumatic pressure:	6 bar
Compressed air connection:	3 dm³ / work cycle
Control system:	PLC
Work cycle trigger:	Sensor
Machine work cycle:	1.5 seconds (stripping and crimping)
Crimp type:	Four-notch crimping
Contact feed:	Vibratory bowl feed
Stroke counters:	Resettable daily counter and quantity preselection

Crimping machine TK-M

Identification	Part number
Crimping machine TK-M (Basic machine without interchangeable unit)	09 98 000 6900
Interchangeable units for Han D® Han E®	09 98 000 6901 09 98 000 6902

Pack contents

- ❏ Crimping machine TK-M
  - – with one mounted interchangeable unit
  - – with 2.0 m connection cable and grounding plug
  - – with 2.0 m pneumatic hose with plug-in nipple N6
- ❏ Plug gauges for setting the crimping
- ❏ Centering bush for positioning the plug gauges
- ❏ Drawer for holding the contacts when the magazine is emptied
- ❏ Draw for insulation remains
- ❏ Tool set for setting
- ❏ 1 set of stripping blades
- ❏ Operating instructions
- ❏ Declaration of conformity

Options

Interchangeable unit

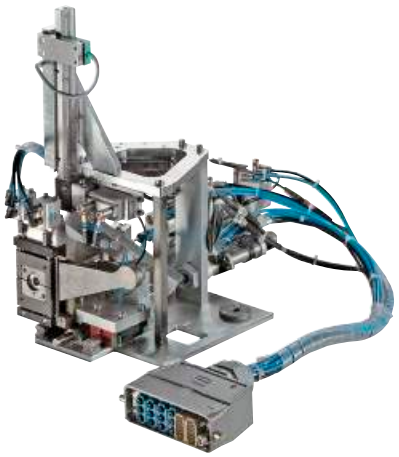

Crimping machine TC-SC

Features

- ❏ Fast stripping and crimping in one operation
- ❏ Basic unit in compact construction
- ❏ Simple handling because of well-arranged construction with touchscreen controlling
- ❏ For individual, turned male and female contacts
  (for the HARTING series Han D®, Han E®, Han® C, Han P®, Han-*Yellock*®, D- Sub)
- ❏ Selective processing of male and female contacts
  (Wire gauge from 0.14 mm² to 10.0 mm², AWG 28 to AWG 8)
- ❏ Contact magazine with filling control
- ❏ Reproducible, top quality gas-tight crimp connections
- ❏ Motor-driven variable adjustment parameters
  – Stripping depth
  – Stripping length
  – Crimping depth
  – Wire position
- ❏ Infinitely variable adjustment parameters
  – Wire retention force
  – Crimp contact feed rate
- ❏ Low noise level
- ❏ For oil-free compressed air
- ❏ Very low setup effort
- ❏ Low maintenance costs of the modular construction

Technical characteristics

Dimensions:	
Height	480 mm
Width	650 mm
Depth	560 mm
Total weight:	Approx. 75 kg
Local noise level:	< 75 dB (A)
Drive:	Electro-pneumatic
Electrical connection:	230 V, 50 Hz
Power rating:	1.0 kW
Pneumatic pressure:	6 bar
Compressed air connection:	3 dm³ / work cycle
Control system:	PLC
Work cycle trigger:	Sensor
Machine work cycle:	2 seconds (stripping and crimping)
Crimp type:	Four-notch crimping
Contact feed:	Vibratory bowl feed
Stroke counters:	Resettable daily counter and quantity preselection

Crimping machine TC-SC

Identification	Part number
Crimping machine TC-SC (Basic machine without interchangeable unit)	09 98 000 8000
Interchangeable units for Han D®	09 98 000 8101
Han E®	09 98 000 8102
Han® C	09 98 000 8103
D-Sub	09 98 000 8104
D-Sub	09 98 000 8105
Han P®	09 98 000 8106
Han-*Yellock*®	09 98 000 8107
Crimp tool for Han® C	09 98 300 8103

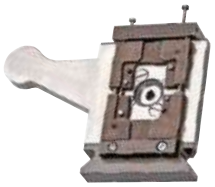

Pack contents

- ❏ Crimping machine TC-SC
  - – with one mounted interchangeable unit
  - – with 2.0 m connection cable and grounding plug
  - – with 2.0 m pneumatic hose with plug-in nipple N6
- ❏ Tool set for adjustments
- ❏ 1 set of stripping blades
- ❏ Operating instructions
- ❏ Declaration of conformity

Options

Interchangeable unit

Crimping machine BK

Features

- ❑ Fast stripping and crimping in one operating
- ❑ Simple handling by quick change tool and stripper
- ❑ For HARTING crimp contacts D-Sub
- ❑ Selectives processing of male and female contacts
- ❑ Wire gauges from 0.09 mm² up to 0.5 mm², AWG 28 up to AWG 20
- ❑ Hand wheel for manual adjustments
- ❑ Maintenance-friendly through needle bearing rail
- ❑ Automatic exhaust of the isolation remainders
- ❑ Produces consistent high quality gas tight crimp connections
- ❑ With crimp force monitor
- ❑ Setting parameters with raster rotary button
  – Depth of insulation stripping
  – Length of insulation stripping
  – Crimping heigth on wire
  – Crimping heigth on isulation
  – Wire retainer position
  – Band thrust
  – Wire position in the crimp contact
- ❑ Non slip and anti-vibration feet
- ❑ Low noise level
- ❑ For unlubricated compressed air
- ❑ Low maintenance costs

Technical characteristics

Dimensions	
Height	690 mm / 1400 mm with a contact reel
Width	420 mm
Depth	430 mm
Total weigth	approx. 72 kg
Localized noise level	85 dB (A)
Drive	electro pneumatic
Power supply	230 V, 50/60 Hz, 2.5 A
Consumption	0.75 kW
Pneumatic pressure	6 bar
Control system	PLC
Stripping device	Typ 514
Suction apparatus	2000.0900.20
Work cycle trigger	Sensor
Work cycle	0.35 s.
Ilumination	integrated tool light 20001326
Motor speed	440 –2000 rpm
Stroke counter	Daywise and fixed

Crimping machine BK

Identification	Part number
Crimping machine BK (without quick change tool)	09 98 000 5000
Quick change tool for D-Sub (AWG 28-24) D-Sub (AWG 24-20) D-Sub high density (AWG 26-24)	 09 98 000 3008 09 98 000 3009 09 98 000 3012

Pack contents

- ❏ Crimping machine BK
  - – with role owner and guide plate
  - – with 2.0 m connection cable and shockproof plug
  - – with 2.0 m pneumatic hose with plug-in nipple N9
- ❏ Oiler bottle for the lubricating of the crimping contacts
- ❏ Tool set for setting
- ❏ 1 set of stamps for wire and isolation-crimp
- ❏ 1 anvil one-piece for wire and isolation-crimp
- ❏ 1 set of stripping blades
- ❏ 1 litre of contact oil
- ❏ Operating instructions
- ❏ Declaration of conformity

Options

V-Blades for special wires
on request

Tools for crimp contacts

Tools for crimp termination – D-Sub-S, D-Sub-HD, DIN 41612

Identification	Part number	
Service crimp tool		for standard contacts for high density contacts
for single D-Sub **standard** contacts	09 99 000 0175	
for single D-Sub **high density** contacts	09 99 000 0535	
HARTING-Crimp tool		
for 500 bandoliered D-Sub **standard** contacts	09 99 000 0169	
for 500 bandoliered D-Sub **high density** contacts	09 99 000 0597	
HARTING-Semi-automatic crimping device		
Main drive foot-operated 220 V / 50 Hz	09 99 000 0246	
Crimping head for bandoliered D-Sub **standard** contacts	09 99 000 0253	Wire gauge 0.09-0.56 mm² (AWG 28-20)
for **DIN 41612** contacts, types BC / har-bus® 64	09 99 000 0252	0.09 - 0.5 mm²
FC 1	09 99 000 0249	0.09 - 0.25 mm²
FC 2	09 99 000 0250	0.14 - 0.56 mm²
FC 3	09 99 000 0251	0.5 - 1.5 mm²
BC / har-bus® 64	09 99 000 0628	0.13 mm² (solid wire)
Reel holder for 10 000 contacts	09 99 000 0158	
Insertion and removal tool		
for single D-Sub **standard** contacts	09 99 000 0171	
for single D-Sub **high density** contacts	09 99 000 0513	

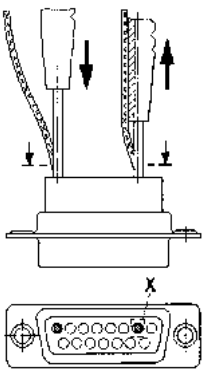

Assembly of crimp contacts
After crimping the stranded wire to the contact using a hand tool or automatic crimping device, insert the contact into the chamber with the tool, working from the wiring side. You will hear the contacts snap home and to check that they are securely in place, give the wire a gentle pull.

Removing crimp contacts
Position the tool from the wiring side as shown in the diagram below and insert into the contact chamber. The contact can then easily be removed from the wiring side together with the wire itself and reinserted in a different chamber. The tool is designed for a maximum insulation diameter of Ø 1.7 mm.

Stripping length: 2.5 + 0.5 mm

Notes

Tools for crimp termination – D-Sub-S, D-Sub-HD

Identification	Part number	
Crimp tool for turned male and female contacts AWG 28-18 4 indent crimp in acc. to MIL 22 520/2-01	09 99 000 0501	

Contact Part No.	Gauge	Crimp tool selection No.
09 67 000 3x76	AWG 18, 20, 22	6 for AWG 18 and AWG 20, 5 for AWG 22
09 67 000 8x76	AWG 20, 22, 24	6
09 67 000 5x76	AWG 22, 24, 26	6
09 67 000 7x76	AWG 24, 26, 28	6

Locator for crimp tool Details see table	09 99 000 0531	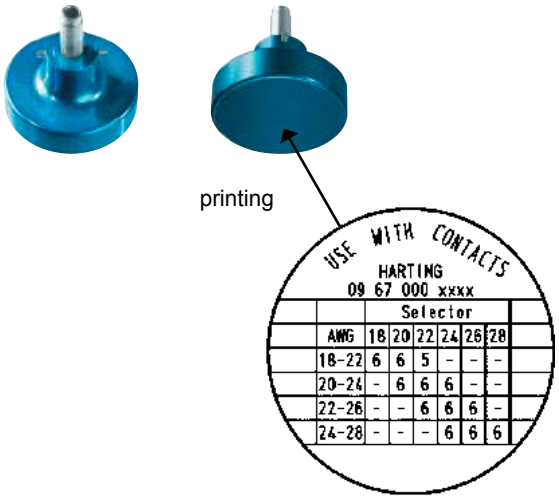

Tools for crimp termination – D-Sub-M

Identification	Part number	Drawing
Hand crimp tool for ***signal*** contacts	09 99 000 0501	printing 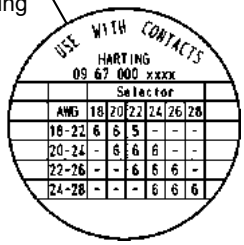 Wire gauge AWG 18 – 28
Die (To be ordered separately)	09 99 000 0531	
Hand crimp tool for ***power*** contacts	09 99 000 0509	
Positioner for male and female contacts (To be ordered separately)	09 99 000 0504	**Contact Part No.** / **Gauge** / **Tool setting** **09 69 182 x420** – AWG 16, 18, 20 – 3 for AWG 16, 2 for AWG 18 and AWG 20 **09 69 282 x420** – AWG 16, 18, 20 – 3 for AWG 16, 2 for AWG 18 and AWG 20 **09 69 182 x421** – AWG 12, 14 – 5 for AWG 12 and 4 for AWG 14 **09 69 282 x421** – AWG 12, 14 – 5 for AWG 12 and 4 for AWG 14 **09 69 182 x422** – AWG 10, 12 – 7 for AWG 10 and 6 for AWG 12 **09 69 282 x422** – AWG 10, 12 – 7 for AWG 10 and 6 for AWG 12 **09 69 182 x423** – AWG 8, 10 – 7 for AWG 8 and 6 for AWG 10 **09 69 282 x423** – AWG 8, 10 – 7 for AWG 8 and 6 for AWG 10
Positioner for male contacts (To be ordered separately.)	09 99 000 0522	**Contact Part No.** / **Gauge** / **Tool setting** **09 69 282 x821** – AWG 12, 14 – 5 for AWG 12 and 4 for AWG 14 **09 69 282 x823** – AWG 8, 10 – 7 for AWG 8 and 6 for AWG 10
Positioner for female contacts (To be ordered separately.)	09 99 000 0521	**Contact Part No.** / **Gauge** / **Tool setting** **09 69 182 x821** – AWG 12, 14 – 5 for AWG 12 and 4 for AWG 14 **09 69 182 x823** – AWG 8, 10 – 7 for AWG 8 and 6 for AWG 10
Hand crimp tool for ***coaxial*** contacts, solder/crimp version[1)]	09 99 000 0503	
Die (To be ordered separately)	09 99 000 0508	Contact Part No. / Cavity 09 69 181 x230 / 09 69 281 x230 – B 09 69 181 x141 / 09 69 281 x141 – C 09 69 181 x140 / 09 69 281 x140 – B
Die (To be ordered separately)	09 99 000 0515	Contact Part No. / Cavity 09 69 181 x143 / 09 69 281 x143 – A
Die (To be ordered separately)	09 99 000 0519	Contact Part No. / Cavity 09 69 181 x233 / 09 69 281 x233 – B

[1)] Only the outer ferrule is crimped (inner conductor is soldered)

Tools for crimp termination – D-Sub-M

Identification	Part number	
Hand crimp tool for ***coaxial*** contacts, crimp/crimp version[1], suitable for ***inner*** contact	09 99 000 0501	
Inner contact die (To be ordered separately)	09 99 000 0507	

Contact Part No.
09 69 182 x140
09 69 282 x140
09 69 182 x230
09 69 282 x230
09 69 182 x232
09 69 282 x232
09 69 182 x233
09 69 282 x233

Identification	Part number	
Hand crimp tool for ***coaxial*** contacts, crimp/crimp version[1], suitable for ***outer*** ferrule	09 99 000 0503	
Outer contact die (To be ordered separately)	09 99 000 0508	

Contact Part No.	Cavity
09 69 182 x140 09 69 282 x140	B
09 69 182 x230 09 69 282 x230	B

Identification	Part number
Outer contact die (To be ordered separately)	09 99 000 0518

Contact Part No.	Cavity
09 69 182 x232 09 69 282 x232	A

Identification	Part number
Outer contact die (To be ordered separately)	09 99 000 0519

Contact Part No.	Cavity
09 69 182 x233 09 69 282 x233	B

[1] Both inner and outer conductor are crimped

Tools for crimp termination – D-Sub-M

Identification	Part number	
Hand crimp tool for ***high voltage*** contacts	09 99 000 0501	
Die for male and female contacts (To be ordered separately.)	09 99 000 0533	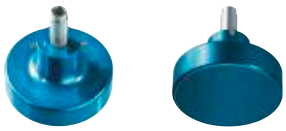
Extraction tool for ***coaxial, pneumatic, power*** and ***high voltage*** contacts	09 99 000 0512	

Contact Part No.	Gauge	Tool setting
09 69 182 2550	AWG 24, 26, 28, 30	5 for AWG 24 and 26, 4 for AWG 28 and 3 for AWG 30
09 69 282 2550	AWG 24, 26, 28, 30	5 for AWG 24 and 26, 4 for AWG 28 and 3 for AWG 30

Tools for crimp termination – InduCom

Identification	Part number	
Hexagonal head screwdriver for hoods with hexagonal screws	61 03 600 0021	
Crimp tool for flange and ferrule	61 03 600 0020	
Inserts for crimp tool		Width of hexagonal nut [mm]
	61 03 000 0179	5.0
	61 03 000 0180	5.5
	61 03 000 0098	6.0
	61 03 000 0099	6.5
	61 03 000 0100	7.0
	61 03 000 0101	7.5
	61 03 000 0102	8.0
	61 03 000 0103	8.5
	61 03 000 0104	9.0
	61 03 000 0105	9.5
	61 03 000 0174	10.0
	61 03 000 0172	10.5
	61 03 000 0168	11.0
	61 03 000 0169	11.5
	61 03 000 0175	12.0
	61 03 000 0176	12.5
	61 03 000 0177	13.0
	61 03 000 0178	13.5
	61 03 000 0173	14.0
Mounting tool for flange		
for D-Sub hoods (9-37 contacts)	61 03 600 0017	
for D-Sub hoods (50 contacts)	61 03 600 0018	
Insertion and removal tool for contacts	09 99 000 0171	

Crimp tools for screened hoods

Tool / Assembly instructions

Identification	No. of contacts	Part number	Drawing	Dimensions in mm
Crimp tool for screened hoods		09 99 000 0233	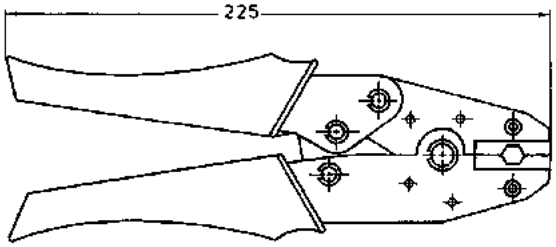	
Crimp tool dies	9 15 25 37	09 99 000 0235 09 99 000 0235 09 99 000 0236 09 99 000 0237		

Assembly instructions for screened hoods

Place the metal screen part (A) on the cable.
Prepare the cable for termination.

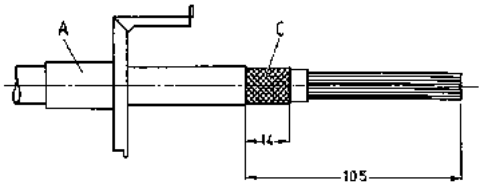

Place the inner ferrule (B) between conductors and the outer braid (C).

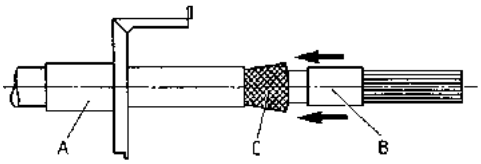

Terminate the D-Sub connector.
Put the metal screen part (A) over the braid and crimp directly over the inner ferrule, ensuring that the correct crimp tool die is used.
Slide in the other metal screen part (D).

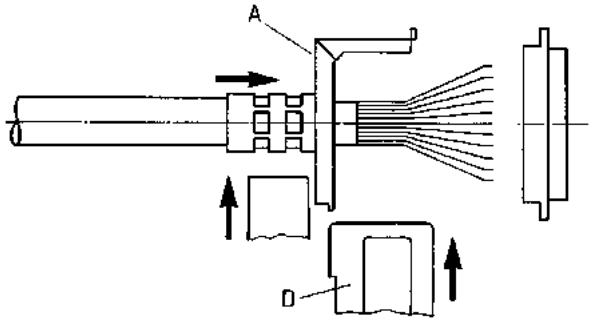

Push back the terminated connector into the assembled screen.
Put the assembled connector, screen and knurled screws into the thermoplastic hood and snap closed.

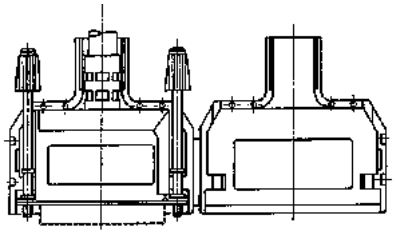

Modular tooling system for starting connector press-in

The diversity of connector types with press-in terminations and varying termination styles make it necessary to have a simple, flexible tooling system that can be continuously updated.

The HARTING modular tooling system has significant advantages in terms of economic assembly of the many connector types with press-in terminations. The basic modules of the tooling system which will always be required are:

- Press
- Top tool
- Bottom tool
- Base plate

To increase automation and productivity the following modules may be added to the basic assembly:

- Guide frame with base plate
  for accurate positioning of the pcb
  up to a length of 600 mm

- Guide frame ”Standard“
  for hand bench press and pneumatic press
  and pcb height of 123.5 up to 309.5 mm

- Guide frame ”Long“
  for pneumatic press and
  pcb height of 123.5 up to 668.5 mm

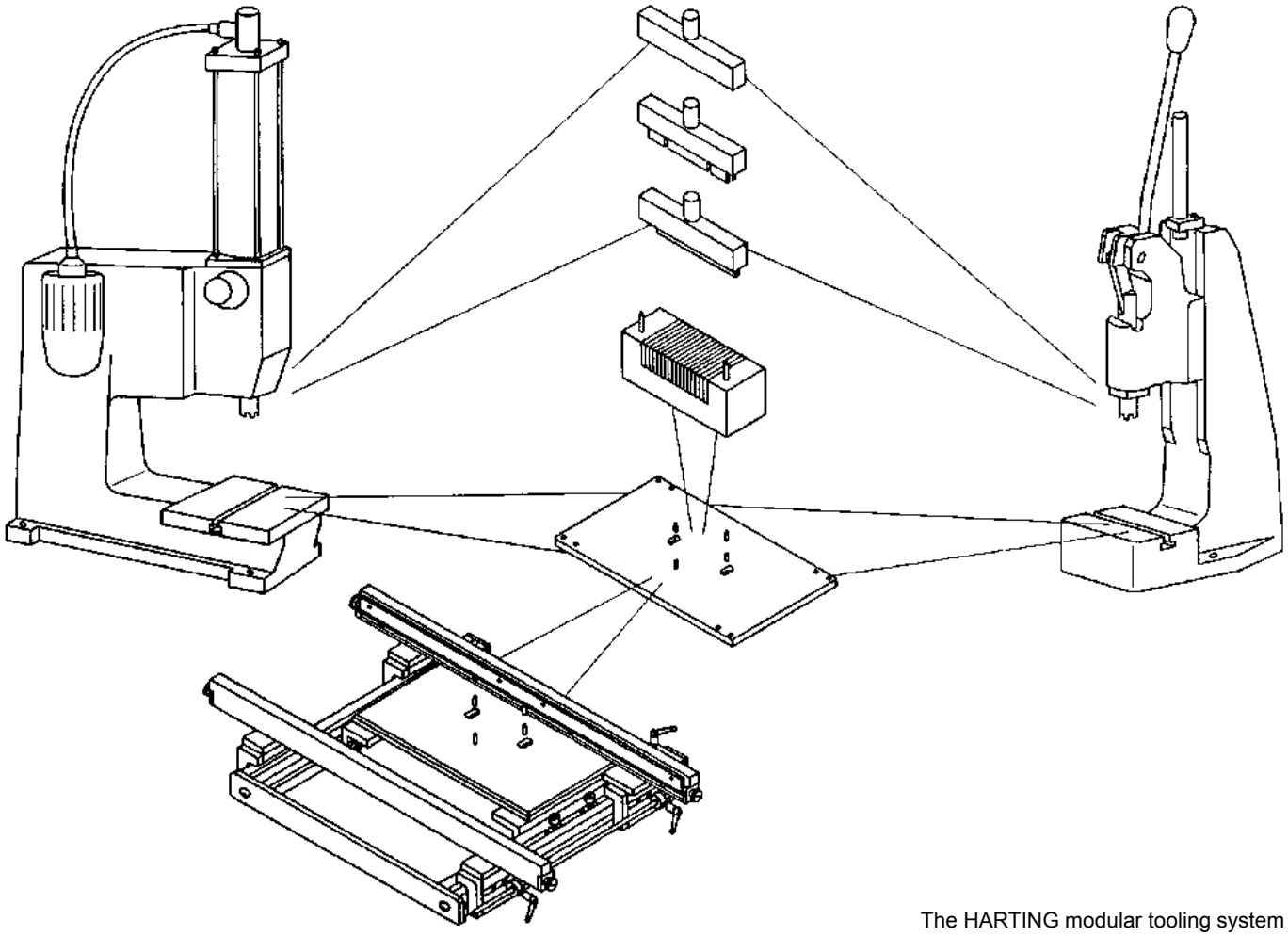

The HARTING modular tooling system

Handling indications

When setting up an assembly machine it is not necessary to set the working height of the press and adjust the base plate more than once. There is no need for further adjustments. All the other adaptations for various applications are performed efficiently and are reliant by various combinations of individual modules.

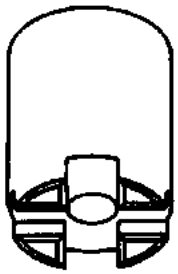

Ram with cross-shaped groove

Positioning the bottom tool in relation to the top tool

The ram of the HARTING press is generally provided with a cross-shaped groove which accurately positions the top tool in steps of 90°.

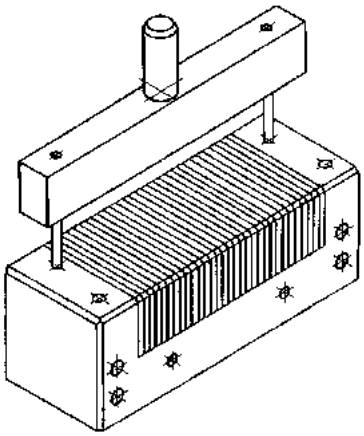

Positioning the bottom tool in relation to top tool

Two guide pins position the bottom tool in relation to the top tool simply and accurately.

These guide pins cannot be used for positioning the pcb or the connector!

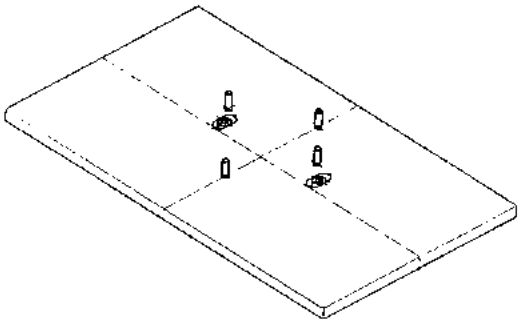

Base plate with pairs of location pins at 90°

Two pairs of pins on the base plate locate the bottom tool in relation to the top tool in steps of 90°.

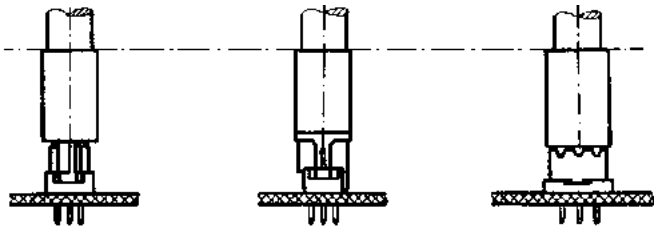

Height compensation

- Various overall heights of connectors are accommodated by type-specific top tools.
- Various pcb thicknesses are accommodated by the use of spacers between the bottom tool and base plate.

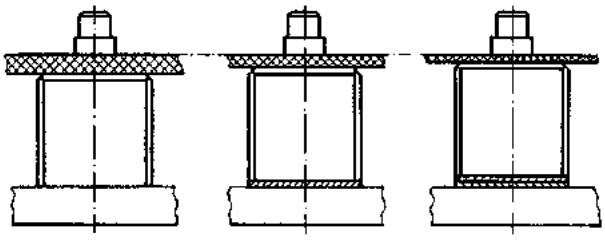

Handling indications

Range of applications for the bottom tool

One bottom tool can be used to assemble connectors with straight or angled press-in terminations.

When pressing in the connectors with angled press-in terminations the positioning pins remain in the bottom tool and serve as guide pins for the connector.

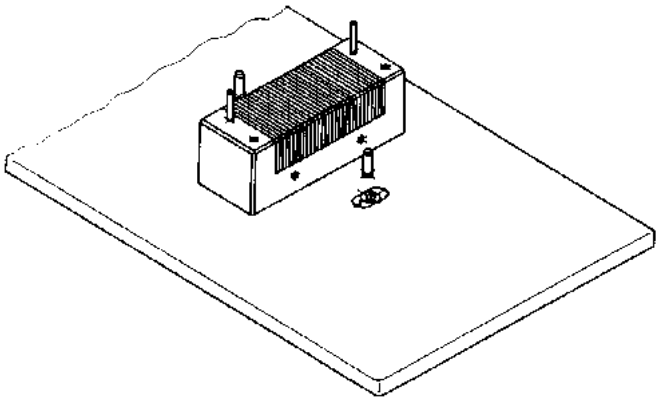

Bottom tool set for assembling connectors with angled pins

By rotating the bottom tool in steps of 90° and relocating the positioning pins it is possible to assemble half-length connectors with angled press-in terminations.

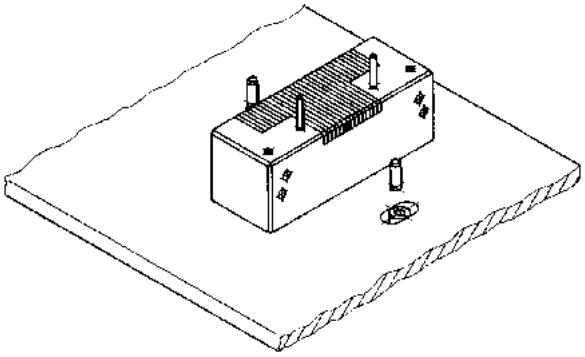

Bottom tool set for assembling half-length connectors with angled pins

Bottom tool (narrow version)

In addition to the square bottom tool with multi-functional properties, HARTING offers the alternative of a narrow bottom tool for assembling connectors with straight press-in terminations. This tool supports the pcb within the press-in connector zone and therefore makes it possible to assemble connectors where electronic components are to be placed in close proximity.

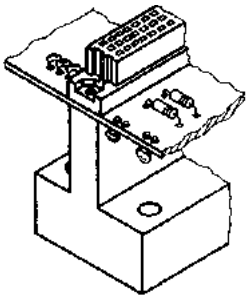

Narrow version of the bottom tool for special applications

Guide frame

The guide frame screwed to the base plate ensures the correct positioning of the pcb in relation to the top and bottom tools and permits a much higher rate of assembly.

Both guide rails are adjustable to accommodate various pcb sizes.

A spring-loaded supporting rail lifts the pcb away from the bottom tool after the press-in operation ensuring that no damage occurs to the conductors as it passes through the machine.

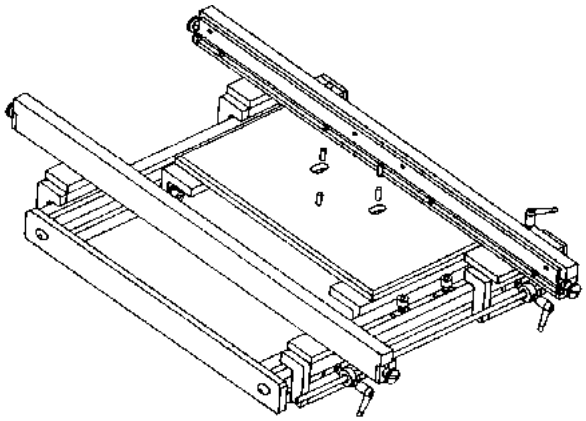

Guide frame for positioning the pcb in relation to the top and bottom tools

Tools for press-in contacts

For a reliable and safe press-in process HARTING has developed a special tooling system.
Each tooling is adapted to the special requirements of the individual connector range, thus a good handling and quick adjustment is guaranteed.

Identification	Part number	Drawing
Top tool for AdvancedTCA® B+ Bottom tool for AdvancedTCA® B+	16 99 000 0001 000 16 99 000 0002 000	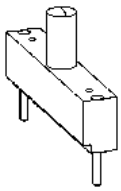 Top tool for AdvancedTCA® B+ 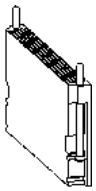 Bottom tool for AdvancedTCA® B+
Top tool for MicroTCA™ Bottom tool for MicroTCA™	16 99 000 0003 000 16 99 000 0004 000	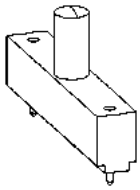 Top tool for MicroTCA™ 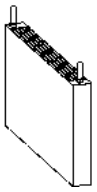 Bottom tool for MicroTCA™
Top tool for AdvancedTCA® Power Male and female connector Bottom tool for AdvancedTCA® Power Male and female connector	02 99 000 0002 16 99 000 0011 000	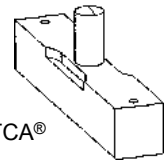 Top tool for AdvancedTCA® Power and MicroTCA™ Power, module version 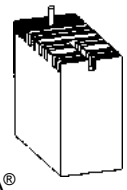 Bottom tool for AdvancedTCA® Power
Top tool for MicroTCA™ Power Module version Backplane version Bottom tool for MicroTCA™ Power Module version Backplane version	02 99 000 0002 16 99 000 0008 000 16 99 000 0010 000 16 99 000 0009 000	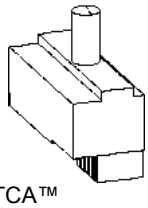 Top tool for MicroTCA™ Power, backplane version 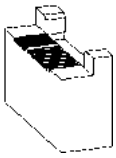 Bottom tool for MicroTCA™ Power, module version 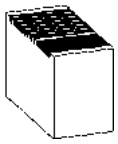 Bottom tool for MicroTCA™ Power, backplane version
Removal tool for AdvancedTCA® B+ Removal tool for MicroTCA™ Repair pliers for MicroTCA™	16 99 000 0005 000 16 99 000 0007 000 16 99 000 0006 000	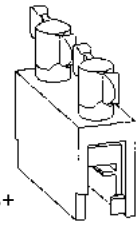 Removal tool for AdvancedTCA® B+ 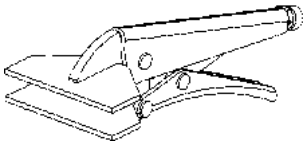 Removal tool for MicroTCA™ 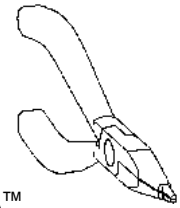 Repair pliers for MicroTCA™

Discrete tooling system – harbus® HM

For economical and safe press-in of harbus® HM connectors with 5+2 and 8+2 rows, HARTING has developed a discrete tooling system.

Due to its modular structure it can be adapted to any connector configuration that needs to be pressed-in extremely quickly and securely.

Therefore a top and a bottom tool for each connector style is available. These tools are inserted in a top or bottom carrier tool with a groove, thus guaranteeing exact position of the top and bottom tools and the connectors.

To use identical carrier tools for all connector configurations, HARTING offer spacer blocks to fill gaps between adjacent top or bottom tools.

The carrier tool is either completely filled with top or bottom tools or respective spacer blocks, making it possible to press-in single modules.

To press-in female connectors with pre-installed upper shields, separate top and bottom tools are available.

For lower shield press-in the tooling can be changed easily.

For further information please check our operating instructions or contact your HARTING representative.

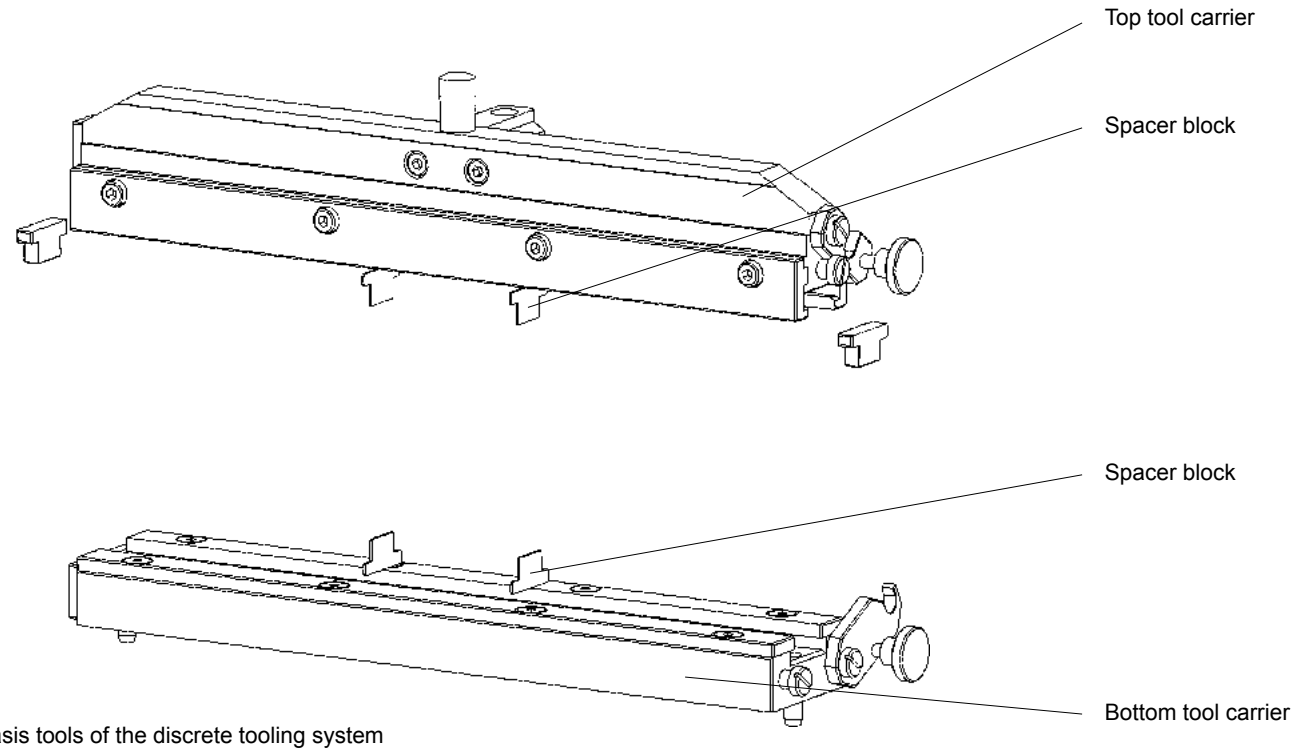

Basis tools of the discrete tooling system

Basis tools for all connector types

Part number connector	Tool identification	Part number tool
17 xx xxx xxxx	Top tool carrier	17 99 000 0012
17 xx xxx xxxx	Bottom tool carrier	17 99 000 0013
17 xx xxx xxxx	Top tool carrier 3U	17 99 000 0073
17 xx xxx xxxx	Bottom tool carrier 3U	17 99 000 0074
17 xx xxx xxxx	Spacer block 0.67 mm (CompactPCI)	17 99 000 0057
17 xx xxx xxxx	Spacer block 5 mm	17 99 000 0056

Part number connector	Tool identification	Part number tool
17 xx xxx xxxx	Spacer block 25 mm	17 99 000 0055
17 xx xxx xxxx	Spacer block 38 mm	17 99 000 0054
17 xx xxx xxxx	Spacer block 44 mm	17 99 000 0053
17 xx xxx xxxx	Spacer block 50 mm	17 99 000 0052
17 xx xxx xxxx	Centering plate female left	17 99 000 0060
17 xx xxx xxxx	Centering plate female right	17 99 000 0061

Discrete tooling system – harbus® HM

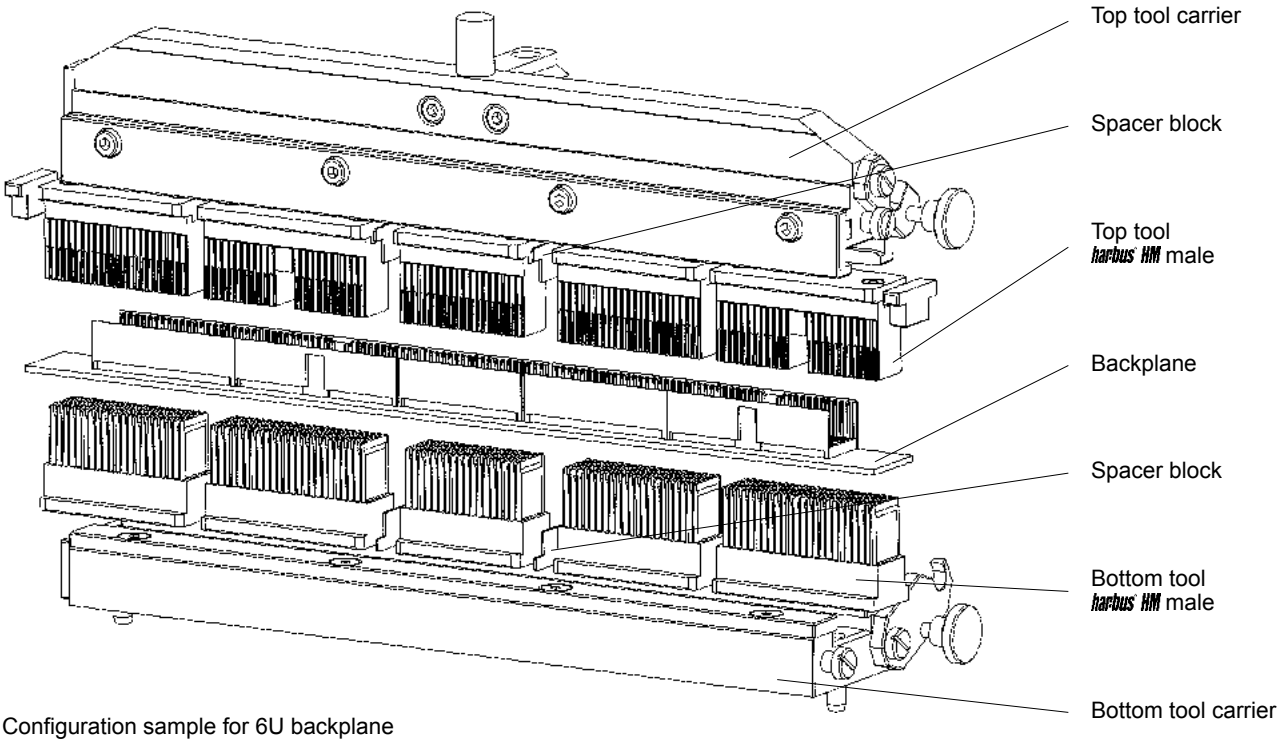

Configuration sample for 6U backplane

Tools for straight male connectors

Part number connector	Tool identification	Part number tool
17 01 xxx xxxx	Top tool, male, type A	17 99 000 0014
17 01 xxx xxxx	Bottom tool, male, type A	17 99 000 0026
17 02 xxx xxxx	Top tool, male, type B	17 99 000 0020
17 02 xxx xxxx	Bottom tool, male, type B	17 99 000 0026
17 04 xxx xxxx	Top tool, male, type B	17 99 000 0019
17 04 xxx xxxx	Bottom tool, male, type B	17 99 000 0025
17 05 xxx xxxx	Top tool, male, type B	17 99 000 0018
17 05 xxx xxxx	Bottom tool, male, type B	17 99 000 0024
17 03 xxx xxxx	Top tool, male, type C	17 99 000 0021
17 03 xxx xxxx	Bottom tool, male, type C	17 99 000 0027

Part number connector	Tool identification	Part number tool
17 11 xxx xxxx	Top tool, male, type D	17 99 000 0022
17 11 xxx xxxx	Bottom tool, male, type D	17 99 000 0028
17 12 xxx xxxx	Top tool, male, type E	17 99 000 0023
17 12 xxx xxxx	Bottom tool, male, type E	17 99 000 0028
17 13 xxx xxxx	Top tool, male, type AB	17 99 000 0015
17 13 xxx xxxx	Bottom tool, male, type AB	17 99 000 0024
17 14 xxx xxxx	Top tool, male, type AB	17 99 000 0016
17 14 xxx xxxx	Bottom tool, male, type AB	17 99 000 0025
17 15 xxx xxxx	Top tool, male, type AB	17 99 000 0017
17 15 xxx xxxx	Bottom tool, male, type AB	17 99 000 0026

Discrete tooling system – harbus® HM

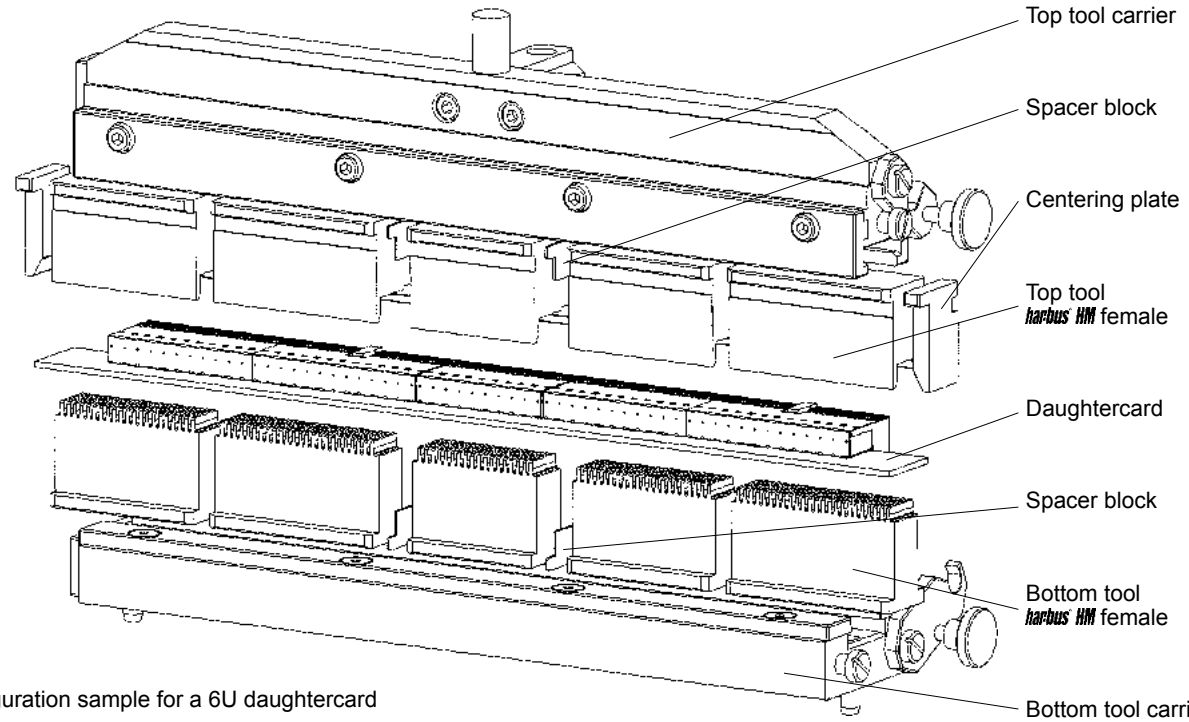

Configuration sample for a 6U daughtercard

Tools for angled female connectors

Part number connector	Tool identification	Part number tool	Part number connector	Tool identification	Part number tool
17 21 xxx xxxx	Top tool, female, type A	17 99 000 0029	17 31 xxx xxxx	Top tool, female, type D	17 99 000 0042
17 21 xxx xxxx	Bottom tool, female, type A	17 99 000 0046	17 31 xxx xxxx	Bottom tool, female, type D	17 99 000 0048
17 22 xxx xxxx	Top tool, female, type B	17 99 000 0038	17 32 xxx xxxx	Top tool, female, type E	17 99 000 0042
17 22 xxx xxxx	Bottom tool, female, type B	17 99 000 0046	17 32 xxx xxxx	Bottom tool, female, type E	17 99 000 0048
17 24 xxx xxxx	Top tool, female, type B	17 99 000 0036	17 33 xxx xxxx	Top tool, female, type AB	17 99 000 0032
17 24 xxx xxxx	Bottom tool, female, type B	17 99 000 0045	17 33 xxx xxxx	Bottom tool, female, type AB	17 99 000 0044
17 25 xxx xxxx	Top tool, female, type B	17 99 000 0034	17 34 xxx xxxx	Top tool, female, type AB	17 99 000 0058
17 25 xxx xxxx	Bottom tool, female, type B	17 99 000 0044	17 34 xxx xxxx	Bottom tool, female, type AB	17 99 000 0045
17 23 xxx xxxx	Top tool, female, type C	17 99 000 0040	17 35 xxx xxxx	Top tool, female, type AB	17 99 000 0029
17 23 xxx xxxx	Bottom tool, female, type C	17 99 000 0047	17 35 xxx xxxx	Bottom tool, female, type AB	17 99 000 0046

Tools for angled shielded female connectors

Part number connector	Tool identification	Part number tool	Part number connector	Tool identification	Part number tool
17 21 xxx xxxx	Top tool, female, type A upper shield	17 99 000 0030	17 34 xxx xxxx	Top tool, female, type AB upper shield	17 99 000 0059
17 21 xxx xxxx	Top tool, female, type A divided shield computer telephony	17 99 000 0031	17 35 xxx xxxx	Top tool, female, type AB upper shield	17 99 000 0030
17 22 xxx xxxx	Top tool, female, type B upper shield	17 99 000 0039	17 21 xxx xxxx	Press-in die lower shield type A	17 99 000 0051
17 24 xxx xxxx	Top tool, female, type B upper shield	17 99 000 0037	17 22 xxx xxxx	Press-in die lower shield type B	17 99 000 0051
17 25 xxx xxxx	Top tool, female, type B upper shield	17 99 000 0035	17 24 xxx xxxx	Press-in die lower shield type B	17 99 000 0050
17 23 xxx xxxx	Top tool, female, type C upper shield	17 99 000 0041	17 25 xxx xxxx	Press-in die lower shield type B	17 99 000 0049
17 31 xxx xxxx	Top tool, female, type D upper shield	17 99 000 0043	17 31 xxx xxxx	Press-in die lower shield type D	17 99 000 0051
17 32 xxx xxxx	Top tool, female, type E upper shield	17 99 000 0043	17 32 xxx xxxx	Press-in die lower shield type E	17 99 000 0051
17 33 xxx xxxx	Top tool, female, type AB upper shield	17 99 000 0033	17 33 xxx xxxx	Press-in die lower shield type AB	17 99 000 0049
			17 34 xxx xxxx	Press-in die lower shield type AB	17 99 000 0050
			17 35 xxx xxxx	Press-in die lower shield type AB	17 99 000 0051

Tooling for backplanes – harbus® HM

For 6U backplanes with CompactPCI configuration, HARTING has developed this start-up tooling.

The basis is a top tool carrier with tooth inserts, that are engaged alternately.

Therefore this tooling assembly can be used without any additional set-up time.

The tooth inserts are interchangeable, so that the tooling can be used for other connector configurations as well as for CompactPCI.

The bottom tool should preferably be a loadnest, which carries and aligns the pcb.

For detailed information please contact your local HARTING representative.

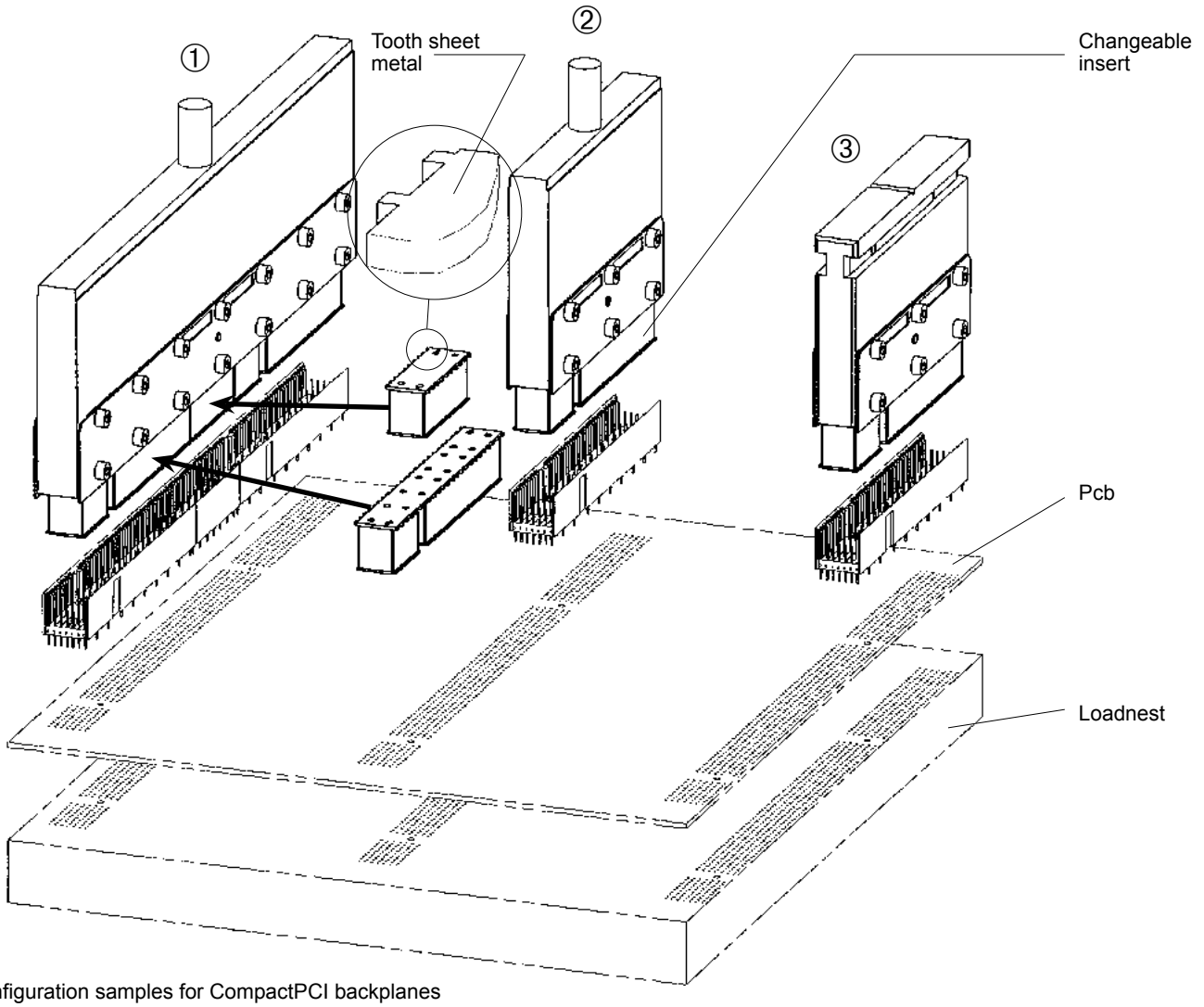

Configuration samples for CompactPCI backplanes

Tools for straight male connectors

Tool identification	Part number tool	Tool identification	Part number tool
① Insert top tool for 6U CompactPCI	17 99 000 0063	Tooth insert for type Monoblock 47	17 99 000 0066
② Insert top tool for 3U CompactPCI	17 99 000 0065		
③ Insert top tool for rotatable tool changer	on request	Tooth insert for type B 19 positions	17 99 000 0068

Insert blocks for male connectors – harbus® HM

The insert blocks can be used to press-in harbus® HM male connectors without any special top tool. These blocks will be put into the connectors manually or automatically.

To press-in the connector no precise position is needed and can be done by a simple flat rock die. This will accelerate the cycle time of the press-in process dramatically.
Insert blocks are developed for use with a loadnest.

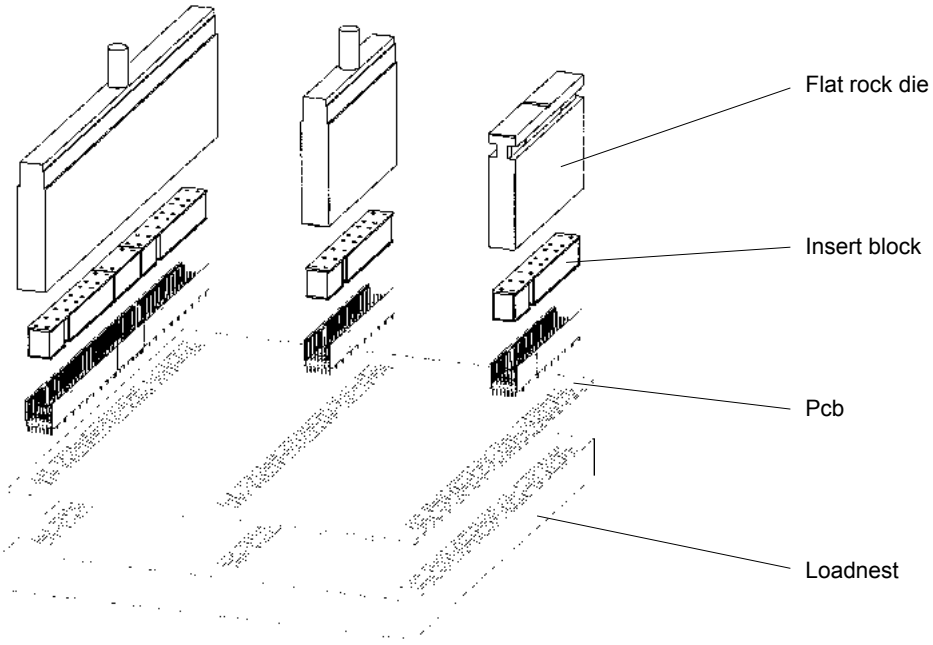

Application samples
for insert blocks

Insert blocks for straight male connectors

Part number connector	Tool identification	Quantity and part number tool
17 01 xxx xxxx	Insert block for type A	1 x 17 99 000 0009 or (2 x 17 99 000 0001)
17 04 xxx xxxx	Insert block for type B	1 x 17 99 000 0004
17 05 xxx xxxx	Insert block for type B	1 x 17 99 000 0002
17 02 xxx xxxx	Insert block for type B	1 x 17 99 000 0003
17 03 xxx xxxx	Insert block for type C	1 x 17 99 000 0001
17 06 xxx xxxx	Insert block for type Monoblock 47	1 x 17 99 000 0008 or (1 x 17 99 000 0001 and 1 x 17 99 000 0005)
17 11 xxx xxxx	Insert block for type D	2 x 17 99 000 0006
17 12 xxx xxxx	Insert block for type E	1 x 17 99 000 0007
17 13 xxx xxxx	Insert block for type AB	1 x 17 99 000 0069
17 14 xxx xxxx	Insert block for type AB	1 x 17 99 000 0070
17 15 xxx xxxx	Insert block for type AB	1 x 17 99 000 0071
17 10 xxx xxxx	Insert block for type DE	1 x 17 99 000 0072

Flat rock dies

Part number connector	Tool identification	Part number tool
17 xx xxx xxxx	Flat rock die for 6U	07 79 000 0155
17 xx xxx xxxx	Flat rock die for 3U	07 79 000 0156

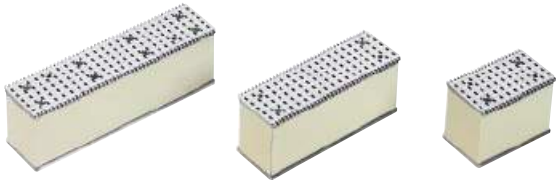

The insert block 17 99 000 0001 e.g. can be used for the types A, C and Monoblock 47.

Tools for press-in contacts

Repair tooling – harbus® HM

Identification	for use with	Part number	Drawing	Dimensions in mm
Tool kit shroud removal	harbus® HM	17 99 000 0095	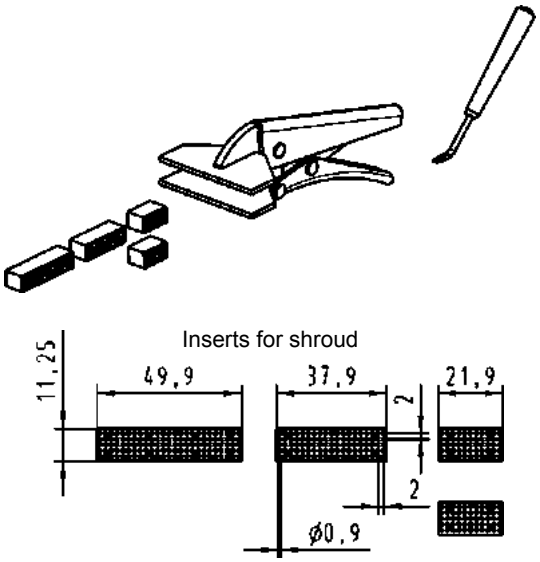	
Insertion and repair tool for single contact	harbus® HM	17 99 000 0094	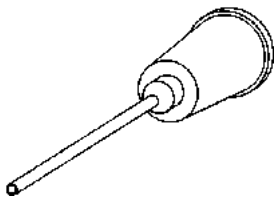	
Removal tool for single male contacts	harbus® HM	09 99 000 0239		
Mounting tool for coding key	harbus® HM	17 99 000 0093	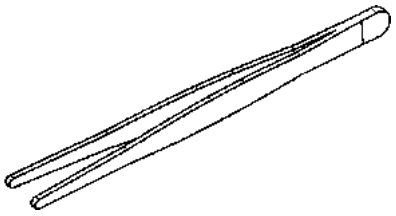	

Tooling for angled male connectors – harbus® HM Power

Identification	for use with	Part number	Drawing	Dimensions in mm
Top tool for angled male connectors	harbus® HM Power	17 99 000 0102	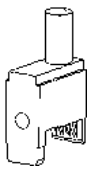	
Bottom tool for angled male connectors	harbus® HM Power	17 99 000 0103	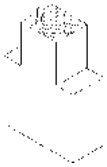	

Discrete tooling system – **Mini Coax**

Straight Mini Coax connectors can be pressed-in with a flat die and a top tool delivered with the connectors. This top tool can be used as contact protection and remains in the connector until the daughtercard is mated.

Angled Mini Coax connectors will be pressed-in with separate top and bottom tools, which will be mounted into a common body.

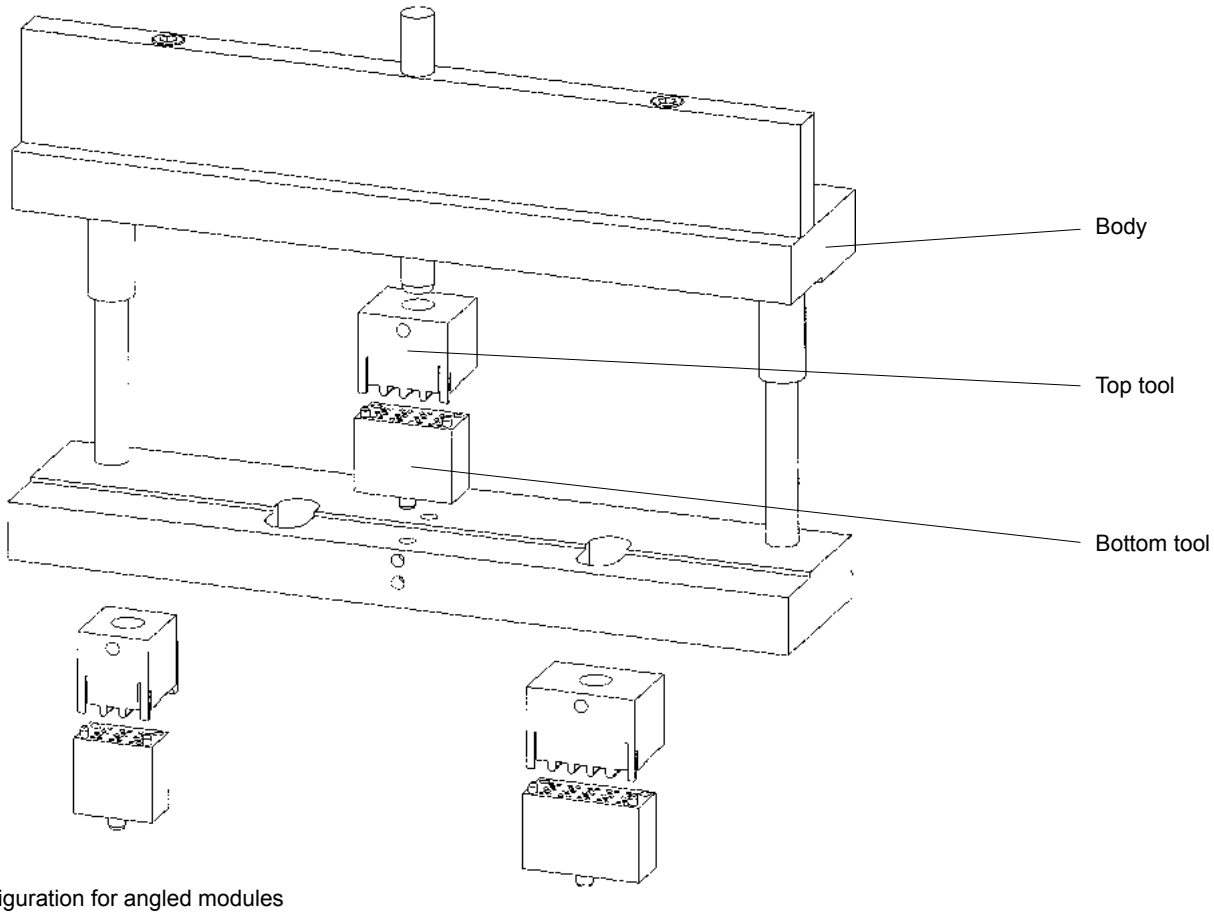

Configuration for angled modules

Tools for straight modules

Part number connector	Tool identification	Part number tool
07 11 xxx xxxx	1 SU Mini Coax Standard bottom tool	on request
07 11 xxx xxxx	1.25 SU Mini Coax Standard bottom tool	on request
07 11 xxx xxxx	1.50 SU Mini Coax Standard bottom tool	on request

Tools for angled modules

Part number connector	Tool identification	Part number tool
07 31 xxx xxxx	Body	07 79 000 0061
07 31 xxx xxxx	1 SU Mini Coax Standard bottom tool	07 79 000 0045
07 31 xxx xxxx	1 SU Mini Coax Standard top tool	07 79 000 0080
07 31 xxx xxxx	1.25 SU Mini Coax Standard bottom tool	07 79 000 0034
07 31 xxx xxxx	1.25 SU Mini Coax Standard top tool	07 79 000 0081
07 31 xxx xxxx	1.50 SU Mini Coax Standard bottom tool	07 79 000 0171
07 31 xxx xxxx	1.50 SU Mini Coax Standard top tool	07 79 000 0170
07 31 xxx xxxx	1 SU Mini Coax single-row bottom tool	07 79 000 0205
07 31 xxx xxxx	1 SU Mini Coax single-row top tool	07 79 000 0204

Hand bench presses / pneumatic presses

Identification	Part number	Drawing	Dimensions in mm
Hand bench press	09 99 000 0201	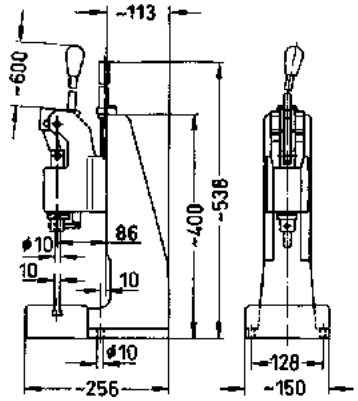	Technical characteristics Working stroke 25 mm Press force 15 kN max. Hole ø in the ram ø 10 mm Net weight approx. 23 kg
Pneumatic press **40 kN**	09 99 000 0282	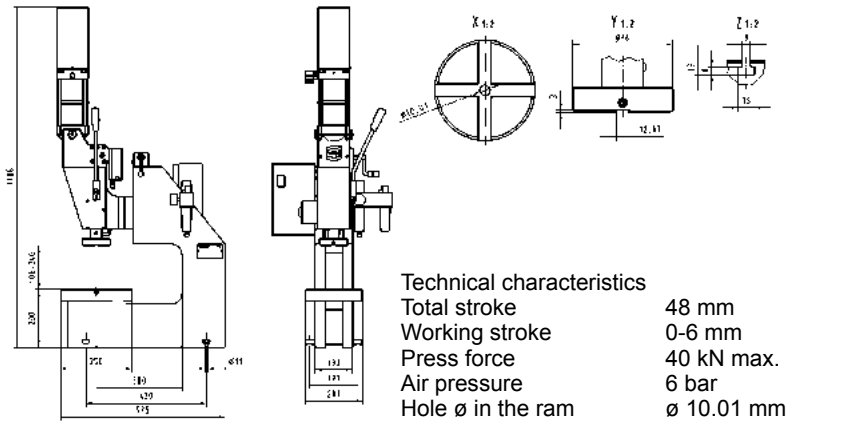	Technical characteristics Total stroke 48 mm Working stroke 0-6 mm Press force 40 kN max. Air pressure 6 bar Hole ø in the ram ø 10.01 mm Net weight 136 kg Power supply 110 V / 220 V AC
Adaptor for height compensation[1)]	09 99 000 0279	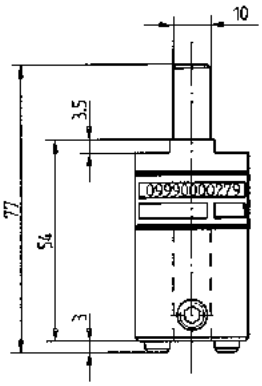	
Guide frame with base plate Standard type for pcb size x = 123,5 - 309,5 mm Long type[2)] for pcb size x = 123,5 - 668,5 mm Base plate	09 99 000 0244 09 99 000 0261 09 99 000 0255	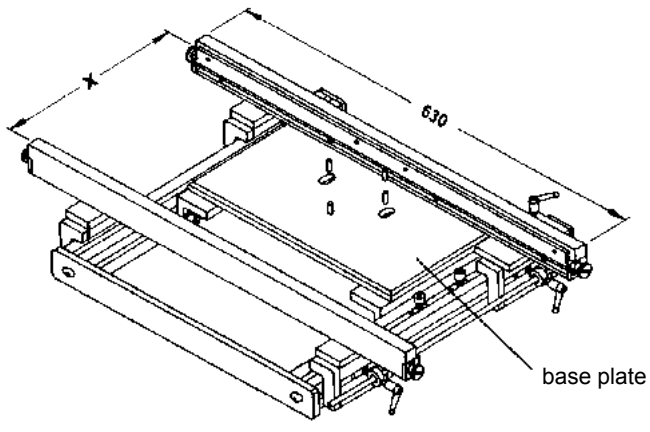	

[1)] suitable for 09 99 000 0282 and all CPM machines
[2)] not suitable for hand bench press

CPM press-in machines

Part number	**09 89 040 0000**

Technical characteristics

Drive	electro-mechanical, servo
Press-in force	100 kN
max. pcb dimensions	600 x 1000 mm
Floor space	1200 x 1150 mm
Weight	980 kg
Power supply	3x 208 / 380 / 400 / 415 V
Consumption	< 1 kW
Colour	on request

CPM *prestige*
(incl. PC, control software, barcode reader, keyboard, touch screen)

Built-in features:

- Guiding rails (carbon/spring-loaded) for the secure positioning of the pcb
- Touch-screen and Industrial PC with UPS (uninterruptable power supply)
- Barcode reader for management ease of press-in programs
- All dimensions allow an easy integration into production lines

Process monitoring and quality assurance:

- Touch screen interface with graphical and verbal menus for all machine functions
- Autosense: automated press-in interruption at incorrect press-in forces
- Storage and validation of all press-in parameters via quality assurance software (press-in force tolerances)
- Continuous high-precision measurement and recording of press-in forces and distances
- Remote determination of errors and maintenance
- High flexibility through a modular tool range

Options:

- Rotatable tool changer
- Insertion removal station

Insertion removal station

Power supply	220 V / 50 Hz
Air pressure	6 bar (15-16 l/min.)
Part number	**on request** for pcb dimensions of max. 710 mm x 540 mm

Bestseller **CPM *prestige* with insertion removal station**, adaptable to all HARTING press-in machines.

Tools for press-in contacts

Tools – SEK, D-Sub, har-mik

Identification	Part number	
Top tool for SEK	09 99 000 0197	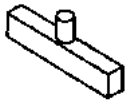 Top tool
Bottom tool universal, for SEK narrow, for SEK	09 99 000 0185 09 99 000 0256	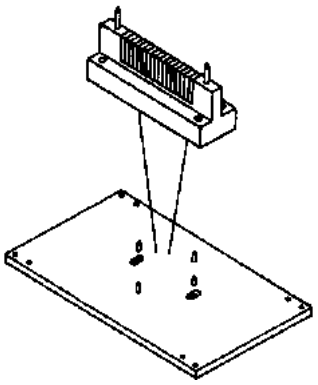 Bottom tool
Base plate for SEK, D-Sub, har-mik	09 99 000 0255	Base plate
Bottom tool for har-mik	60 99 000 0031	
Press-out tool for har-mik	60 99 000 0032	
Bottom tool narrow for D-Sub Only one tool for all polarities, with or without grounding pins 9-37 way 50 way	09 99 000 0600 09 99 000 0523	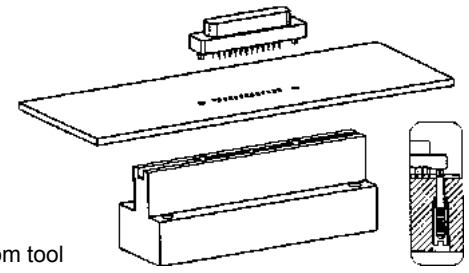 Bottom tool
Plastic with metal plate insert tool for D-Sub male 9 way 15 way 25 way	09 99 600 0709 09 99 600 0715 09 99 600 0725	
Other toolings on request		

Tools – SEK, D-Sub, har-mik

Identification	Part number	Drawing	Dimensions in mm
Top tool for SEK standard connectors		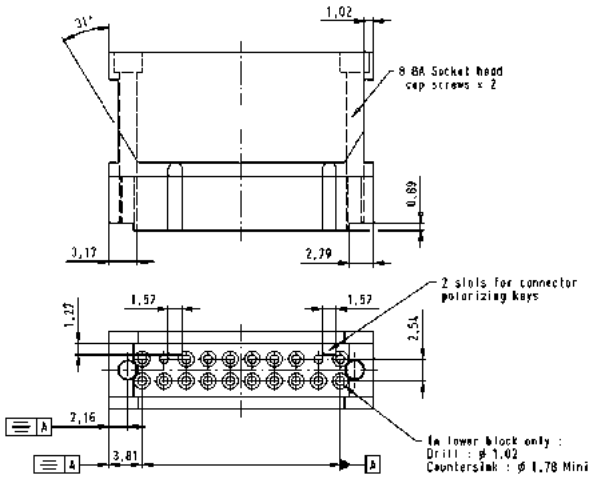	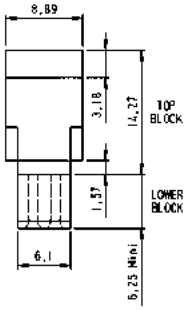
10 way	09 99 000 0710		
14 way	09 99 000 0714		
16 way	09 99 000 0716		
20 way	09 99 000 0720		
26 way	09 99 000 0726		
34 way	09 99 000 0734		
40 way	09 99 000 0740		
50 way	09 99 000 0750		
60 way	09 99 000 0760		
64 way	09 99 000 0764	X Length depends on number of contacts	
Top tool for SEK male low-profile connectors		Top tool including insert 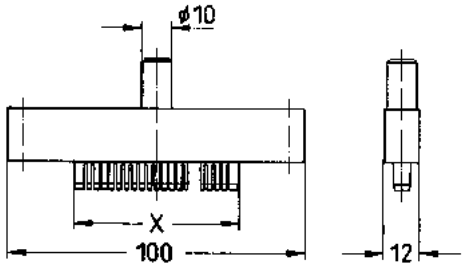	
6 way	09 99 000 0 ⌴ 06		
10 way	09 99 000 0 ⌴ 10		
14 way	09 99 000 0 ⌴ 14		
16 way	09 99 000 0 ⌴ 16		
20 way	09 99 000 0 ⌴ 20		
26 way	09 99 000 0 ⌴ 26		
34 way	09 99 000 0 ⌴ 34		
40 way	09 99 000 0 ⌴ 40		
50 way	09 99 000 0 ⌴ 50		
60 way	09 99 000 0 ⌴ 60		
64 way	09 99 000 0 ⌴ 64	X Length depends on number of contacts	
Top tool including insert ➤ 4 Modular insert ➤ 5		Modular insert 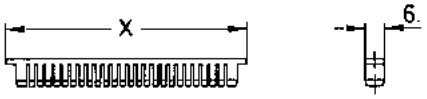	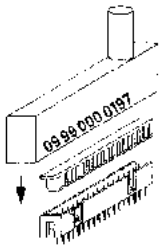
Press-out tool for complete SEK male connectors with 5.5 mm terminations	09 99 000 0220	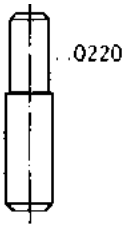	
Support block	09 99 000 0218	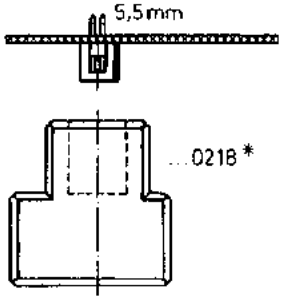	

* Further versions on request

Tools for insulation displacement termination – har-link

Identification	Part number	
Crimping hand tool for shell cable entry	27 99 000 0001	

Tools for insulation displacement termination – har-mik

Tools for insulation displacement termination for Pin and socket and Bellows range

Selection chart for hand assembly

for connector	Hand cable aligner	Head and table	Hand press
Male Pin and socket 60 03 . . . 5200 60 03 . . . 5205 60 03 . . . 5210 60 03 . . . 5215 60 03 . . . 5220	60 99 000 0011	60 99 000 0010	60 99 000 0007
Male Bellows 60 13 . . . 5200 60 13 . . . 5205 60 13 . . . 5215	60 99 000 0017	60 99 000 0016	

Number of contacts

Tools for insulation displacement termination – har-mik

Identification	Part number
Hand press	60 99 000 0007
Head and table for male Pin and socket connector	60 99 000 0010
Head and table for male Bellows connector	60 99 000 0016
Hand cable aligner and press cutter for Pin and socket and female Bellows connector	60 99 000 0011
Hand cable aligner and press cutter for male Bellows connector	60 99 000 0017
Press cutter	60 99 000 0038

Hand press

Head

Table

A manual for the *har-mik*® connector and cable assembly is available on demand. Please contact your local HARTING representative.

Tools for insulation displacement termination – D-Sub, har-mik, SEK

Identification	Part number	Drawing	Dimensions in mm
Bench press for termination of insulation displacement connectors suitable for D-Sub, har-mik, SEK	09 99 000 0114		
Cabling tool for termination of flat cables suitable for har-mik	60 99 000 0034		
Cabling tool for termination of flat cables suitable for D-Sub SEK female SEK DIP SEK LP, 2 rows SEK LP, 4 rows DIN 41612	09 99 000 0135 09 99 000 0115 09 99 000 0134 09 99 000 0131 09 99 000 0130 09 99 000 0150		
Insert for termination of 37-pole male D-Sub connectors	09 99 600 0201		
Hand tool with base plates (included in tool kit) for termination of insulation displacement connectors suitable for D-Sub, SEK	09 99 000 0149		
Cable cutter for flat cables suitable for D-Sub, har-mik, SEK	09 99 000 0116		
Spare parts Blade Cutting plate	09 99 000 0179 09 99 000 0180		

Tools for **FOC contacts**

Identification	Part number	Drawing	Dimensions in mm
Polishing tool			
DIN 41 626	**20 99 000 1092**	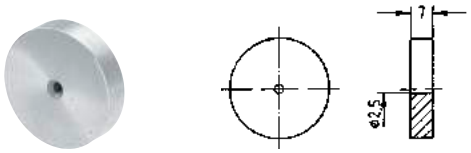	
POF[1] cable Ø 2.2	**20 99 000 1093**	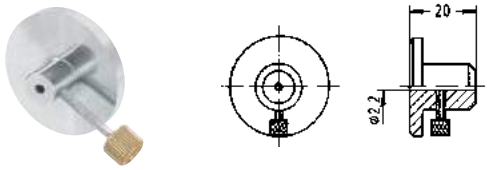	
Fibre stripper			
	20 99 000 1041 **20 99 000 1045** **20 99 000 1046**	0.3 mm 1 mm 0.18/0.3 mm	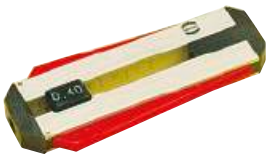
Crimping tool for 1 mm POF contacts – Han D®, Han E® – DIN 41 626 – Ferrule – F-SMA, -ST	**20 99 000 1035**		
HARTING Crimping tool for FO connector (glass fibre) SW 4.3 mm 3.8 mm 4.95 mm	20 99 000 1031		
HARTING Crimping tool for FO connector (plastic fibre) SW 6.95, 4.95 and 3.0 mm	**20 99 000 1033**	for crimping the strain relief to the connector … 1031 FO cable for glass fibre … 1033 POF[1] and SERCOS cable Ø 6.0 and 3.6	
Epoxy adhesive glass fibre	20 80 001 9902	2 ml EPO-TEK 360 with hardener (10:1), 4 g foil pack	
Polishing paper for POF[1]-grain size 1000 for GI 9 µ-grain size for GI 1 µ-grain size	20 80 001 9911 20 80 001 9912 20 80 001 9913	Delivery range: Each part number ordered comprises 2 pieces	

[1] POF = Polymer optical fibre

Stock items in bold type

30. HIS – HARTING Integrated Solutions

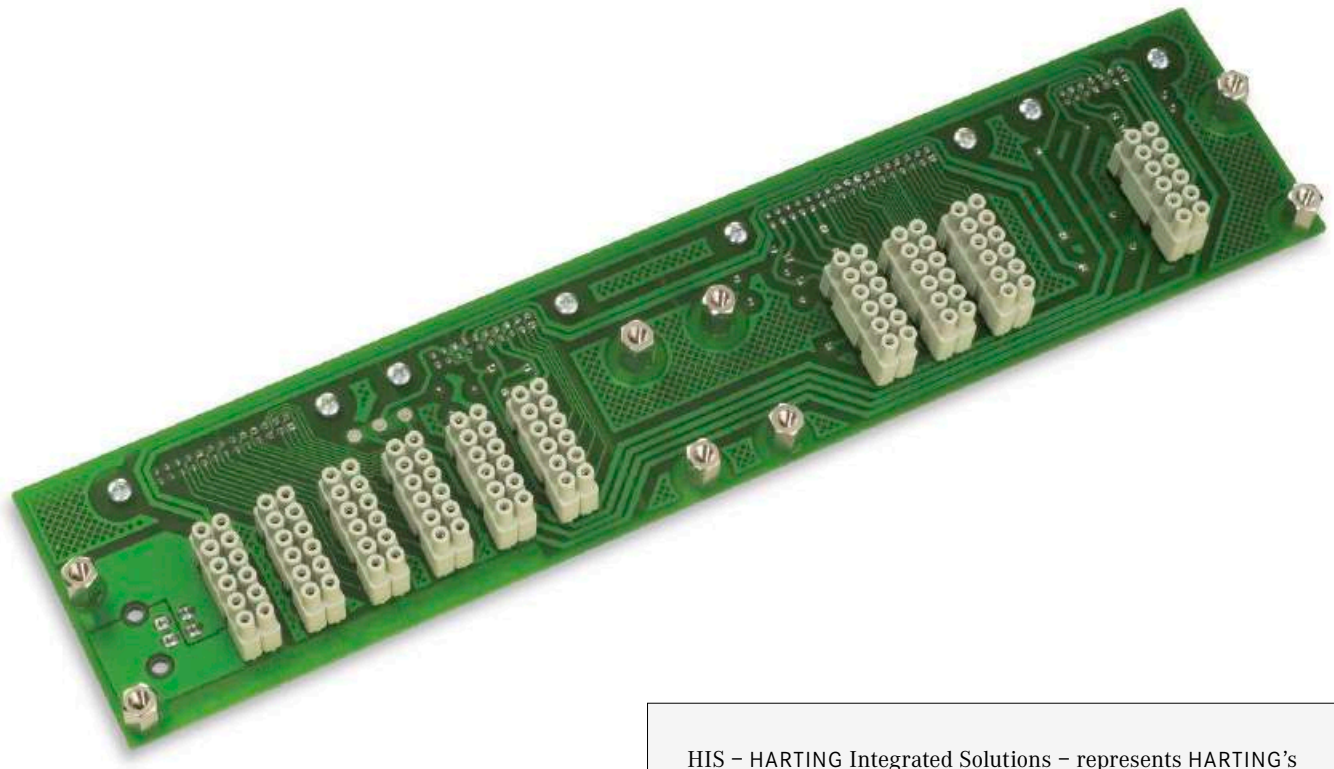

HIS – HARTING Integrated Solutions – represents HARTING's harmonized solutions for customers worldwide. We realize your customized electronic modules, starting with simple interface boards all the way through to complex backplane applications. Based on the "Global Footprint" principle, HARTING has set up a global, standardized development and production infrastructure in the United States, Great Britain and in China. Wherever in the world we develop, produce or assemble your products, identical standards and superior quality embodying a consistent level of perfection are guaranteed.

Contents

	Page
A full service range	**30.02**
Project management and design	**30.03**
Production	**30.04**
Signal integrity	**30.05**
Solution range	**30.06**
HIS locations	**30.07**

A full service range

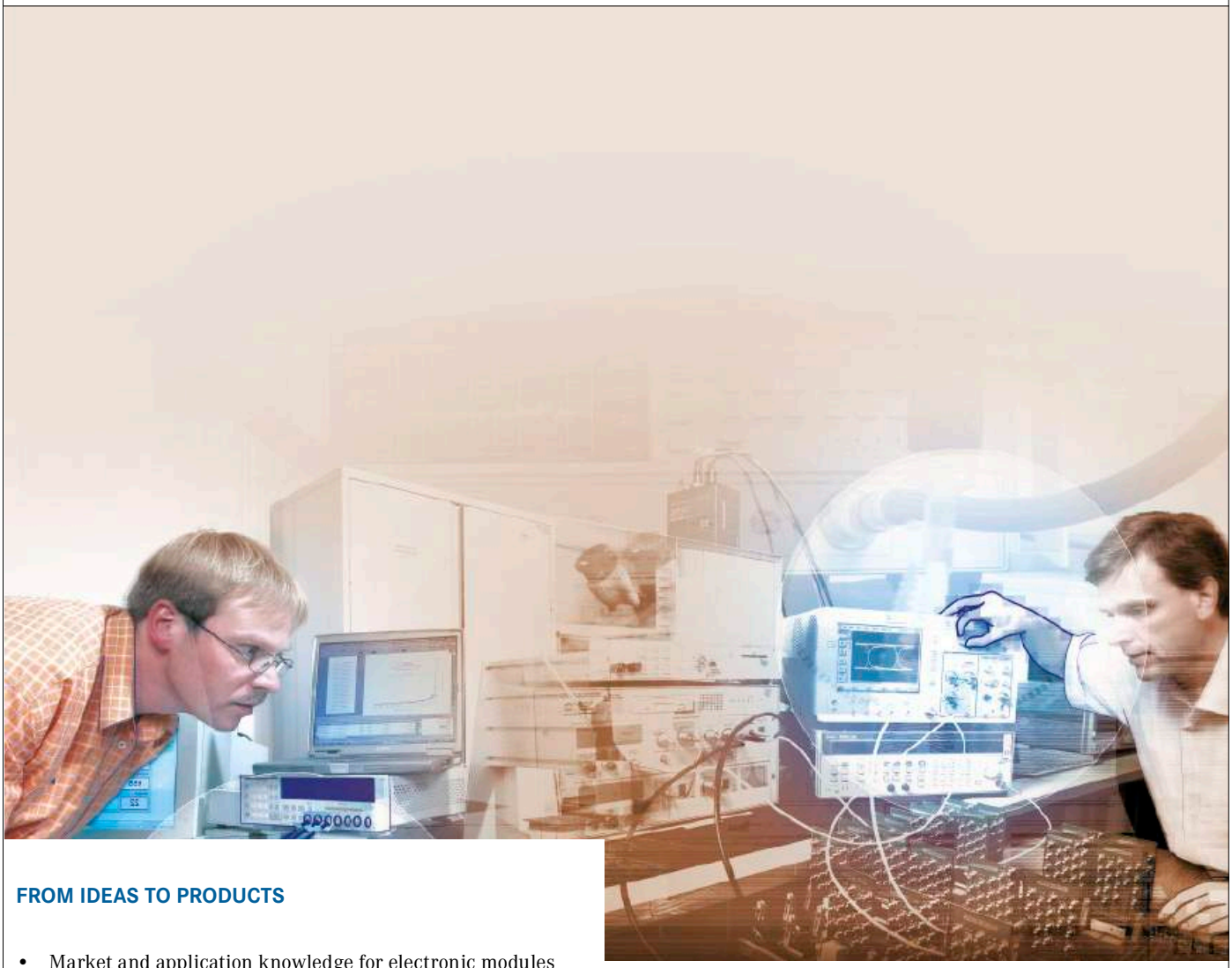

FROM IDEAS TO PRODUCTS

- Market and application knowledge for electronic modules
- Technical expertise and tools for PCB design, simulation and signal integrity
- Worldwide material procurement based on strategic partnerships
- Worldwide identical processes to IPC 610 class 3 manufacturing standards
- Automated module and system tests
- Assembly and function tests of completely wired modules
- Worldwide delivery service

PROJECT MANAGEMENT:

Our field service is your first contact partner in the realization of your electronic modules, supported by HARTING application specialists. Additional support is offered by a team of experts, ensuring professional cooperation throughout all the relevant project phases.
These capabilities are your guarantee of optimal solutions, ranging from development and material procurement, to production and on to delivery.

PCB DESIGN:

HARTING deploys the most advanced, leading edge EDA software in PCB design. Close and coordinated cooperation secures the high performance and quality you expect from your products. Wherever in the world our expert support is asked for, HARTING PCB designers are always at your service, right from the very first design phases.

PRODUCTION & ASSEMBLY:

HARTING has set up a global standardized manufacturing infrastructure in Europe, Asia and North America. State of the art equipment and identical standards guarantee a consistent level of perfection.

ASSEMBLY & SOLDERING:

HARTING processes PCBs up to large backplane formats on SMD assembly lines. Automated pick-and-place machines, reflow soldering and automated tests ensure a high degree of reliability in this demanding and sophisticated production stage. PIHIR (Pin In Hole Intrusive Reflow) guarantees extremely robust mechanical strength for components such as connectors that are subject to high mechanical load. Traditional wave soldering rounds off the range of options HARTING provides.

PRESS-FIT TECHNOLOGY:

Press-fit assembly is a standard technology for processing backplanes with connectors and delivers extremely high mechanical strength. HARTING draws on its own press-fit machines for reliable and enduring contacting. Controlled press-fit forces and recorded force-over-distance diagrams ensure consistent quality.

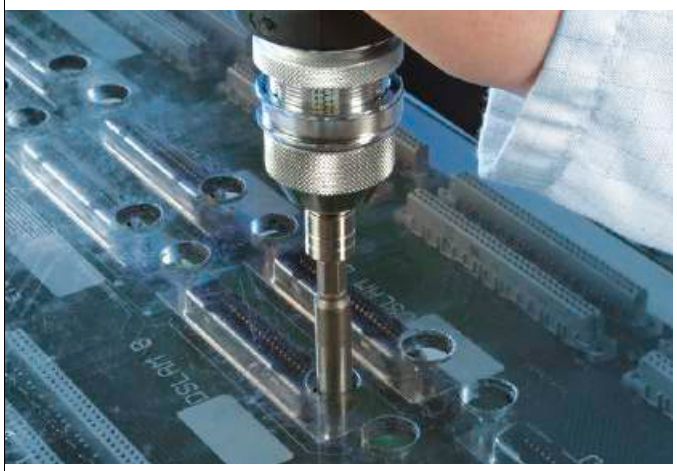

HOUSINGS AND MODULE RACKS:

HARTING offers complete, single source solutions for the development and production of standard or custom housings. Custom design features help reduce costs as well as the number of components.

INSPECTION AND FUNCTION TEST:

The function tests and a safety-relevant inspection of the system conclude the production process. The RoBAT system is capable of performing fully automated tests on modules and backplanes. HARTING's Corporate Technology Services (CTS) provide an accredited laboratory for the qualification of product properties and for signal integrity analyses in systems.

Signal Integrity

Signal integrity is a decisive quality and functionality factor in the development of electronic modules.
The reasons:
Continuously rising bandwidths result in a constant increase of data transmission rates that incur undesired effects such as signal attenuation and distortion, cross-talk and radiation.
Such effects cause a drastic loss of transmission quality in connectors, cables, electronic modules and backplanes.

HARTING counteracts these effects with measurements and simulations in the course of development in order to improve signal integrity at highest transmission rates. As leading provider of connectivity in the telecommunication area, HARTING commands in-depth know-how with regard to signal integrity enabling highest data transmission rates.

SIGNAL INTEGRITY ANALYSIS
IN THE TIME AND FREQUENCY DOMAIN:
Independent qualification of signal integrity and of the backplane design.

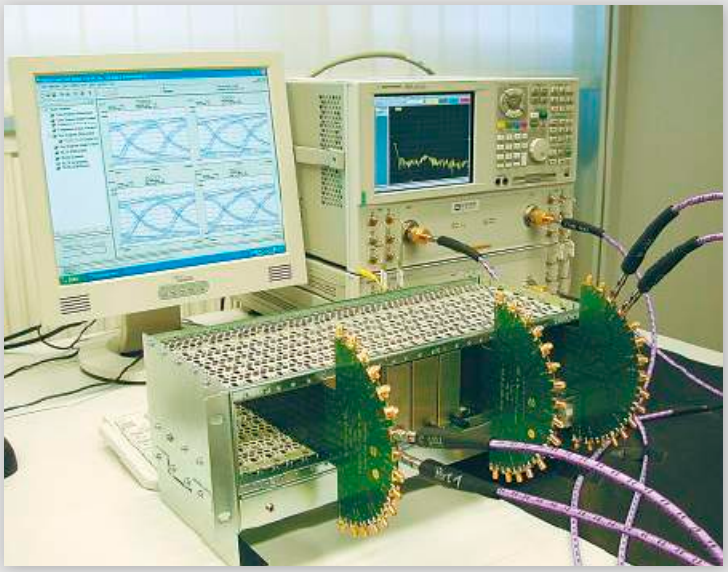

SIMULATION AND MODELS:
Dynamic 3D FEM simulation and SPICE/IBIS/S-parameter model simulation of multipoint & high-speed point-to-point bus systems.

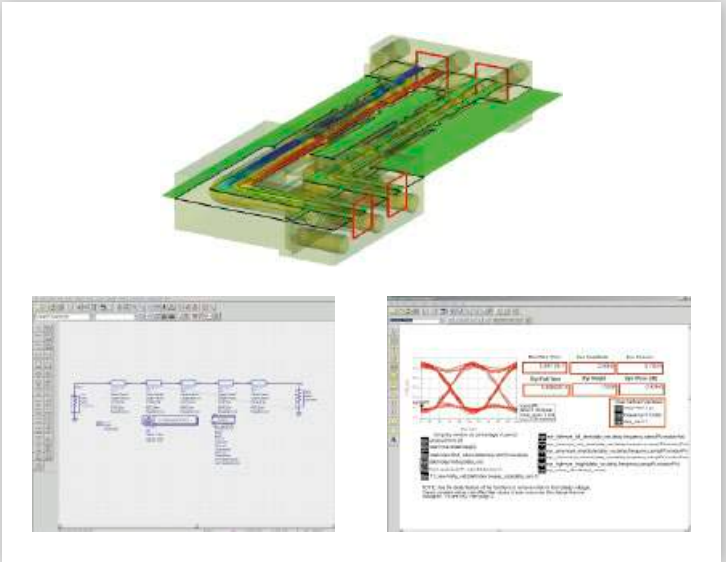

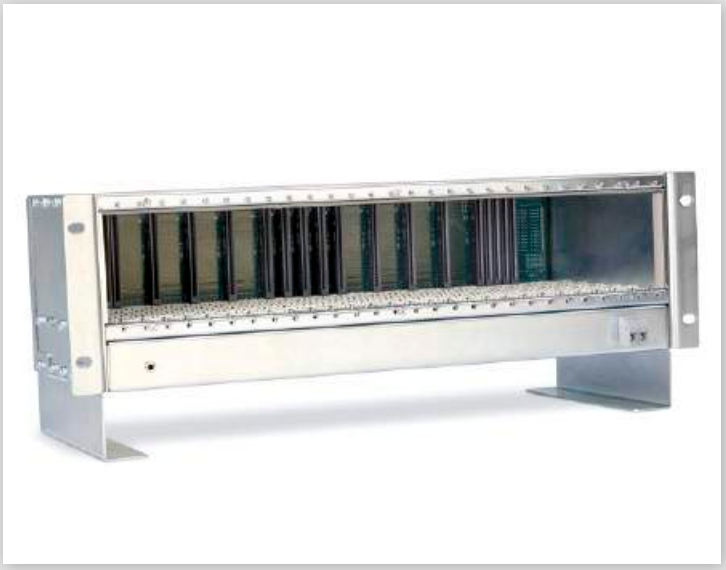

STANDARD PLATFORMS:
Standard solutions for MicroTCA™ & AdvancedTCA™ platforms. backplanes or systems are realized according to your requirements.

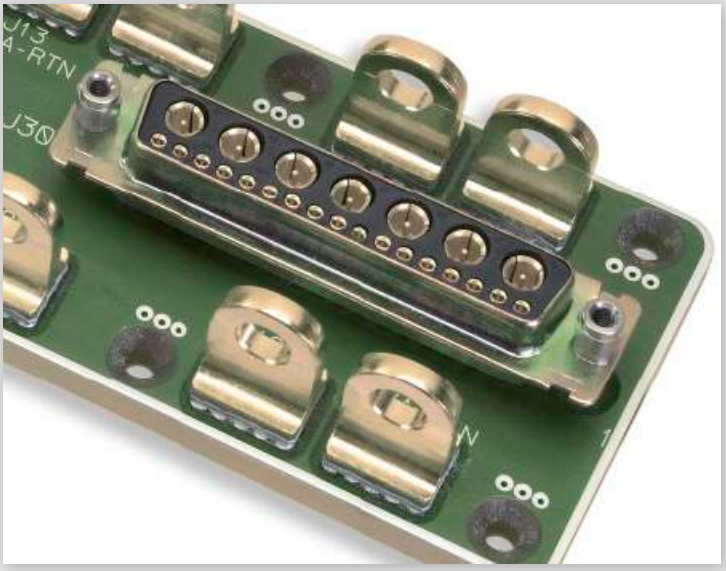

CUSTOM MODULES:
PIHIR assembly, 28-layer-PCB with 6 mm copper planes for 100 A terminals (IP20).

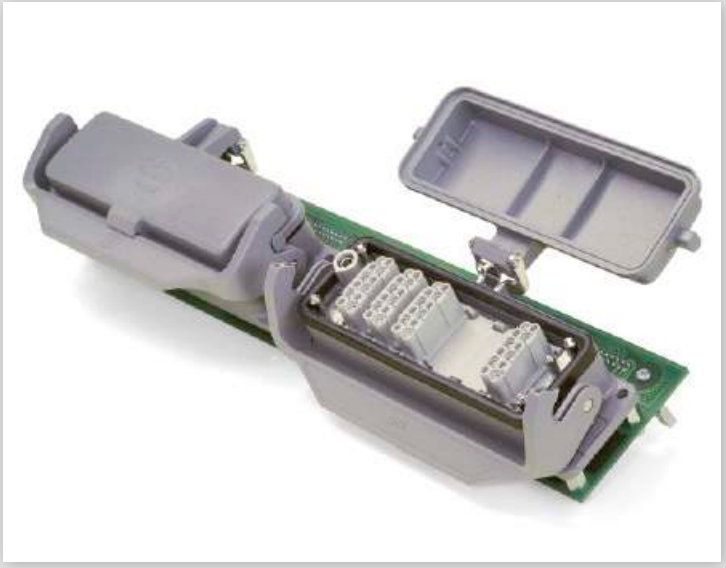

Connection module Han®-Modular for device integration (IP65 / IP67).

DEVELOPMENT AND PRODUCTION EUROPE

Northampton, England
2 000 m²
Static safe environment
ISO 9001:2000
IPC 610 class 3 assembly standards

DEVELOPMENT AND PRODUCTION AMERICA

Elgin, Chicago, USA
10 000 m²
Static safe environment
ISO 9001:2000
IPC 610 class 3 assembly standards

DEVELOPMENT AND PRODUCTION ASIA

Zhuhai, China
18 000 m²
Static safe environment
ISO 9001:2000
IPC 610 class 3 assembly standards

- Harmonized development standards and tools
- Worldwide identical production and test equipment
- Harmonized production and quality standards
- Coordinated Global Project Management
- Global SAP business management system

QUALITY CUSTOMER CARE

INVESTOR IN PEOPLE

Member IPC ASSOCIATION CONNECTING ELECTRONICS INDUSTRIES

31. Custom Device Connectivity

Individual device connectivity tailored to device versatility.
When customized products are called for, you can always rely on HARTING.
HARTING offers a wide range of series products for data, signal and power. Most tasks are covered by a convincing solution from the standard range of board-to-board, cable-to-board or wire-to-board connectivity offered. In many instances, however, specific tasks call for the development of a connectivity solution that is tailored and attuned to specific devices. Requests range from color choices and labeling to stand-alone customer specific solutions.

We implement the connection technology and its customized integration into your devices. Our offerings include individual device connectivity and matching accessories such as cable assemblies and all the way through to complete connection boxes.

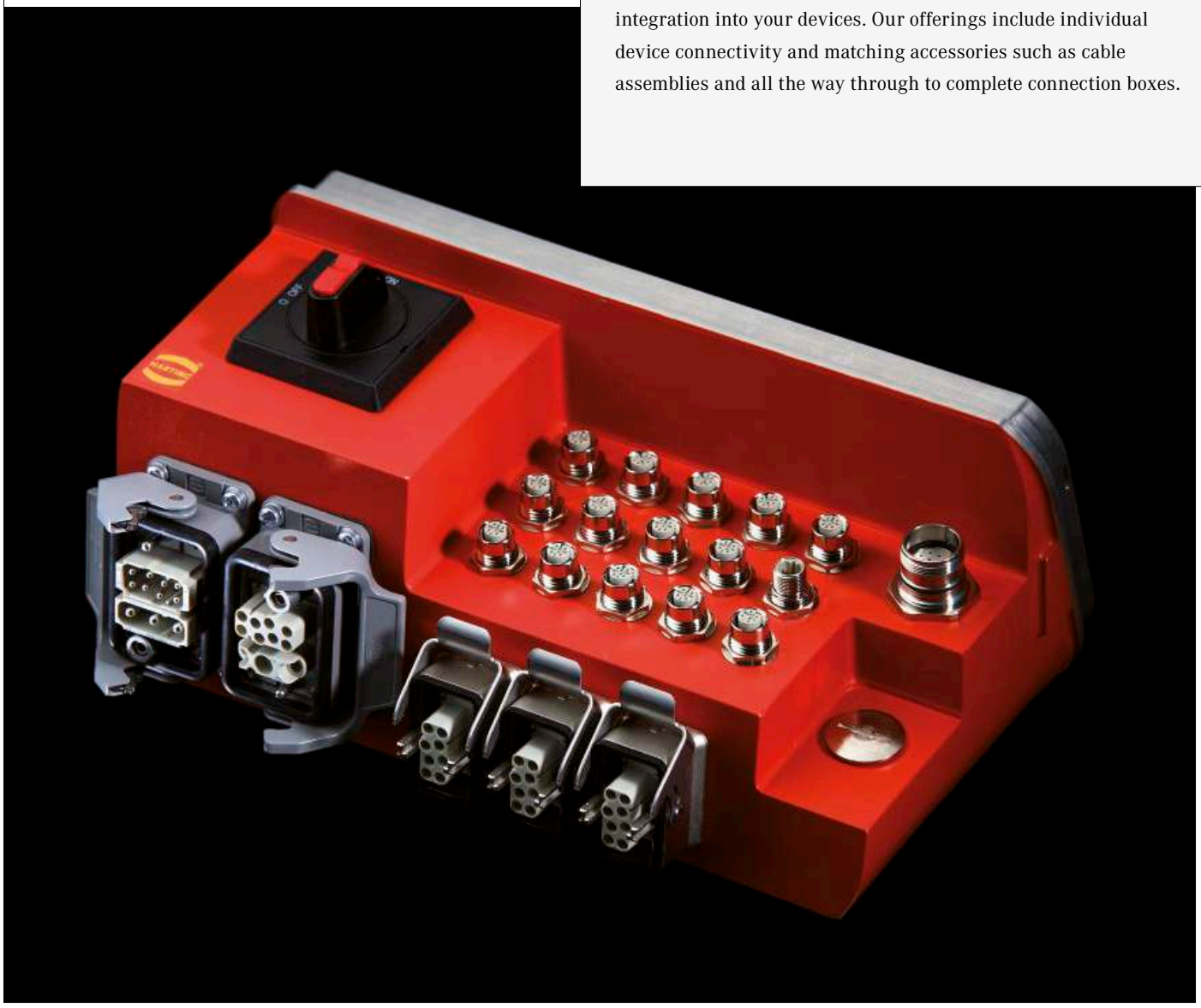

31. Custom Device Connectivity

Contents

	Page
From ideas to the Best Customer Solution	**31.02**
Production as competitive factor	**31.04**
Solution spectrum	**31.06**

CUSTOMER REQUIREMENTS

Highly qualified sales engineers record your requirements, and devise and explain initial solution approaches

DESIGN AND DEVELOPMENT

In close coordination with customers, the inventive engineers at the HARTING Technology Group develop the Best Customer Solution

PRESENTATION OF SOLUTION PROPOSALS

Presentation and discussion of the developed Device Connectivity concept

PRODUCTION

Manufacturing of products to exacting quality standards

DELIVERY

On-time delivery according to your delivery and packaging instructions

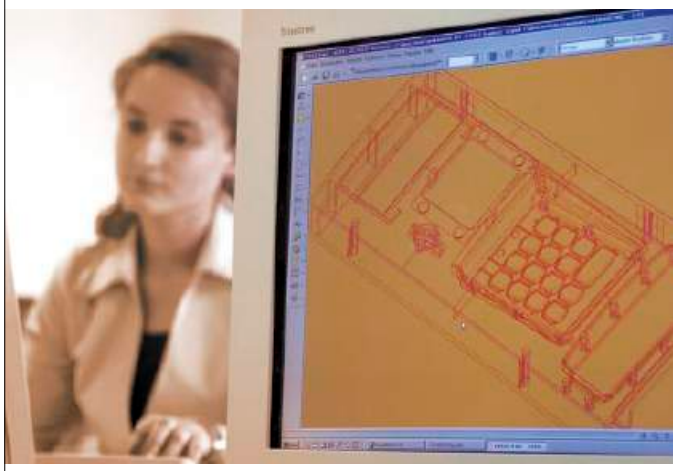

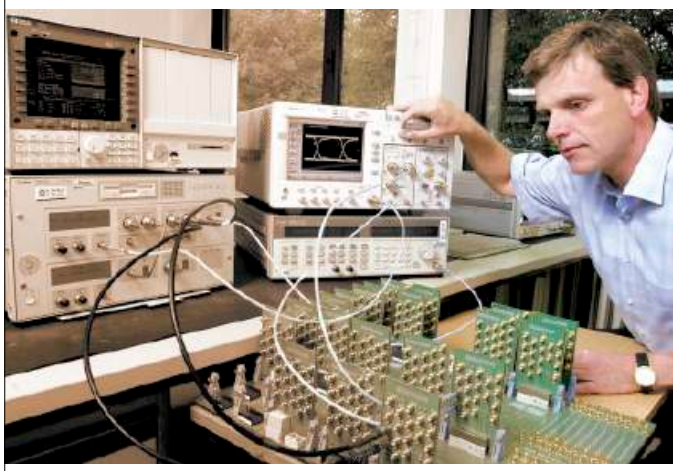

FROM IDEAS TO THE BEST CUSTOMER SOLUTION

In cooperation with your product managers and development engineers, HARTING will generate the ideal connectivity solutions for your devices.

Project management encompasses all activities required for the reliable, cost-effective and on-time handling and execution.

An initial concept is created with the help of advanced, leading edge CAD technologies and inspected in terms of feasibility in specially equipped test workshops as well as by the accredited HARTING laboratory.

In order to attune solutions to production requirements, the tool construction, production and quality management departments contribute their expertise right from the outset.

Production as competitive factor

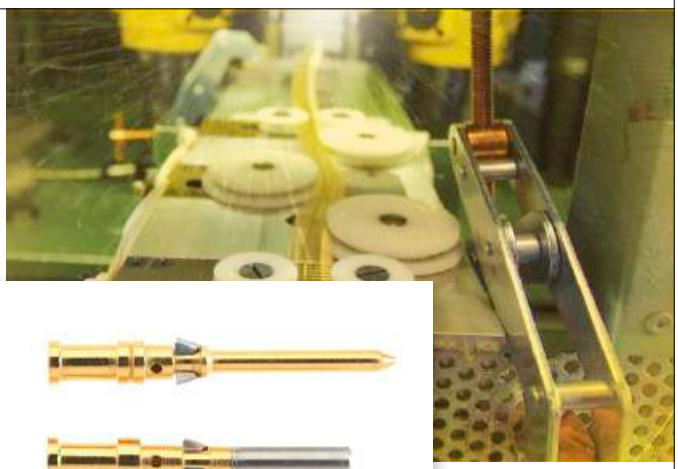

PRODUCTION OF DEVICE CONNECTIVITY:

Our products are backed by an additional, decisive competitive factor - namely the production process. HARTING production performance represents a consequent supplement to innovative product development. Divided according to technology areas, and operating with a high vertical range of manufacture, our state of the art production locations are based in Germany, England, Romania, USA and China. At HARTING, the entire range, from smallest production batches to large-scale automated production, is subject to consistent QC management.

PUNCHED AND LATHED COMPONENTS:

Punching and lathing represent basic technologies used to produce contacts. Customer requirements such as special contact materials and dimensions can be implemented directly through our own production processes.

INJECTION MOLDING:

Isolators of connectors and plastic housing are produced in an injection molding process. HARTING excels in the production of filigree isolators and the production of miniature precision parts.
We develop, construct and produce micro precision injection molding tools along the limits of feasibility.

ALUMINUM DIE-CASTING:

HARTING produces its Han® housings in an aluminum die-casting process. This technology forms the basis for robust metal housings for a wide range of different applications.

OVERMOLDING AND ENCAPSULATING TECHNOLOGY:

HARTING offers overmolded cables and connectors for cable-to-board connectivity with degree of protection IP65 / IP67. Corresponding tools and production equipment for overmolding and encapsulating technologies are available at all our production locations.

CABLE ASSEMBLY:

The cable assembly area produces cabling solutions with standard, hybrid or special cables.
We produce bus cables for Ethernet, Fieldbus systems as well as for special communication protocols.
We also assemble FOC cables on the basis of plastic, glass (monomode, gradient and grade index) or HCS fibers.

PCB PRODUCTION:

We support innovative device configurations with PCB modules as connectivity interfaces. The offerings include solutions ranging from simple PCB adapters through to complex multilayer backplanes.
Based on the Global Footprint principle, HARTING is able to provide the same production expertise at our companies in the USA, in England and in China.

PRODUCTION OF COMPLETE MODULES:

Our range of Device Connectivity offerings also covers the development and assembly of complete custom connection modules, with IP20 or IP65 / IP67 modules for data, signal and power applications tailored to suit the requirements of your specific devices. These connection modules combine our in-depth expertise and competencies in connection, PCB and housing technologies.

TAILORED PRODUCTS:

HARTING provides a convincing answer to each and every connectivity requirement – whether board-to-board, cable-to-board or wire-to-board applications. Our customers benefit from our capability of providing tailored solutions for all applications.

Customized connector concept

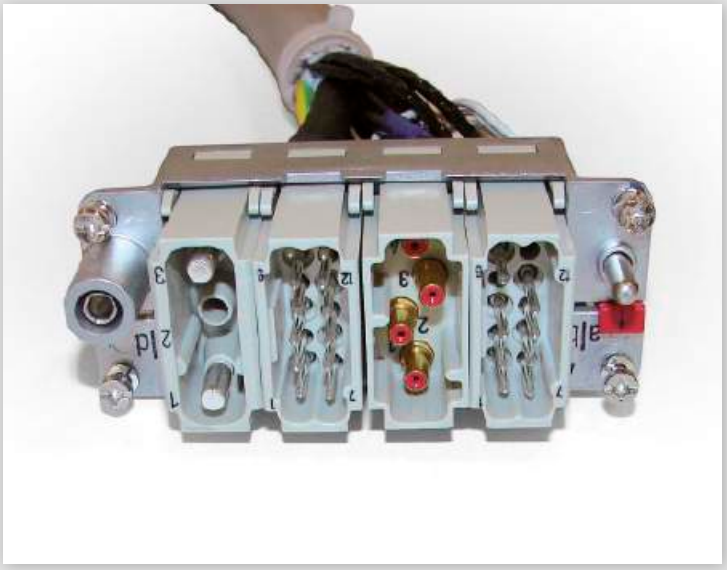

Ready-to-use pre-assembled connector with system cable

Connectivity module for installation in equipment or control cabinets

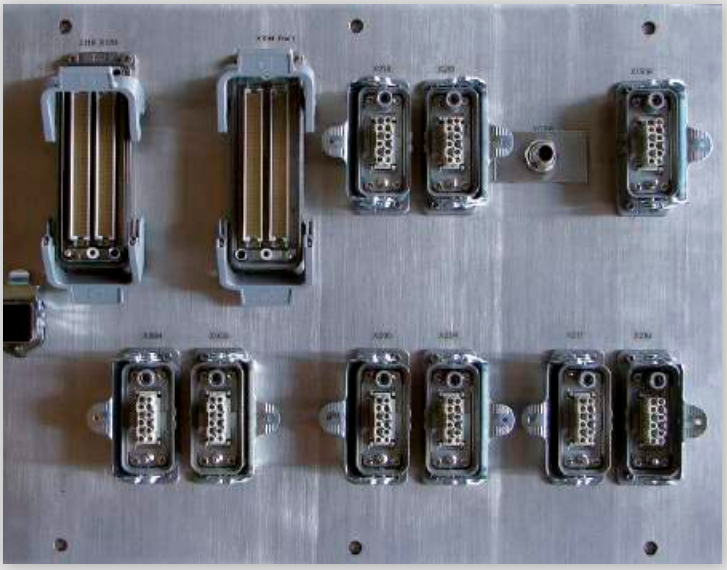

Decentralized electronic module

Decentralized electronic module with high degree of protection (IP65 / IP67)

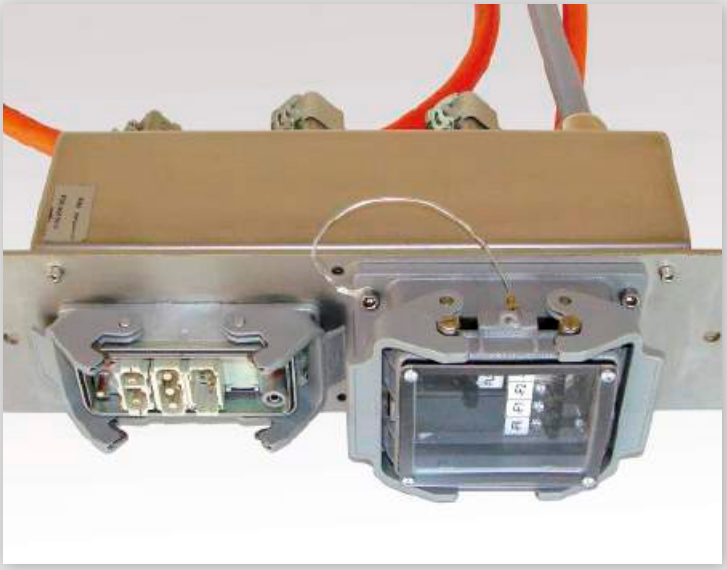

Notes

Contents

	Page
Electrical engineering data	**40.02**
Termination technologies	**40.06**
IP protection levels	**40.16**

General

The choice of device termination technology and connectors entails more than just considering factors such as functionality, the number of contacts, current and voltage ratings. It is equally important to take account of where the connectors are to be used and the prevailing ambient conditions. This in turn means that, dependent on the conditions under which they are to be installed and pursuant to the relevant standards, different voltage and current ratings may apply for the same connectors.

The most important influencing factors and the corresponding electrical characteristics of the associated connectors are illustrated here in greater detail.

Overvoltage category

The overvoltage category is dependent on the mains voltage and the location at which the equipment is installed. It describes the maximum overvoltage resistance of a device in the event of a power supply system fault, e. g. in the event of a lightening strike.

The overvoltage category affects the dimensioning of components in that it determines the clearance air gap. Pursuant to the relevant standards, there are 4 overvoltage categories.

Extract from IEC 60 664-1, Para. 2.2.2.1.1

*Equipment of **overvoltage category I** is equipment for connection to circuits in which measures are taken to limit transient overvoltages to an appropriately low level.*

Note: Examples are protected electronic circuits.

*Equipment of **overvoltage category II** is energy-consuming equipment to be supplied from the fixed installation.*

Note: Examples of such equipment are appliances, portable tools and other household equipment with similar loads.

If such equipment is subjected to special requirements with regard to reliabiliy and availability, overvoltage category III applies.

Equipment of overvoltage category III is equipment in fixed installations and for cases where the reliability and the availability of the equipment is subject to special requirements.

Note: Examples of such equipment are switches in the fixed installation and equipment for industrial use with permanent connection to the fixed installation.

*Equipment of **overvoltage category IV** is for use at the origin of the installation.*

Note: Examples of such equipment are electricity meters and primary overcurrent protection equipment.

Rated impulse voltages (Table 5 of DIN EN 61 984)

Nominal voltage of the supply system (= rated insulation voltage of equipment)					Preferred values for the rated impulse voltage kV (1.2/50 µs)			
					Overvoltage category			
					I	II	III	IV
Voltage line to earth derived from the nominal voltage of the supply system to the a. c. voltage (r. m. s. value) or d. c. voltage	AC voltage (r. m. s. value) 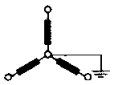	AC voltage (r. m. s. value)	AC voltage (r. m. s. value, d. c. voltage)	AC voltage (r. m. s. value, d. c. voltage)	Special protected levels	Level for electrical equipment (household and others)	Level for distribution supply systems	Input level
V	V	V	V	V				
100	66/115	66	60	–	0.5	0.8	1.5	2.5
150	120/208; 127/220	115; 120; 127	110; 120	220-110; 240-120	0.8	1.5	2.5	4
300	220/380; 230/400; 240/415; 260/440; 277/480	220; 230; 240; 260; 277	220	440-220	1.5	2.5	4	6
600	347/600; 380/660; 400/690; 415/720; 480/830	347; 380; 400; 415; 440; 480; 500; 577; 600	480	960-480	2.5	4	6	8
1000		660; 690; 720; 830; 1000	1000	–	4	6	8	12

Pollution degree

The dimensioning of operating equipment is dependent on environmental conditions. Any pollution or contamination may give rise to conductivity that, in combination with moisture, may affect the insulating properties of the surface on which it is deposited. The pollution degree influences the design of components in terms of the creepage distance.

The pollution degree is defined for exposed, unprotected insulation on the basis of environmental conditions.

HARTING products for the device termination (connectors) are designed as standard for Pollution Degree 3.

Pollution degree 1
in air-conditioned or clean, dry rooms, such as computer and measuring instrument rooms, for example.

Pollution degree 2
in residential, sales and other business premises, precision engineering workshops, laboratories, testing bays, rooms used for medical purposes. As a result of occasional moisture condensation, it is to be anticipated that pollution/contamination may be temporarily conductive.

Pollution degree 3
in industrial, commercial and agricultural premises, unheated storage premises, workshops or boiler rooms, also for the electrical components of assembly or mounting equipment and machine tools.

Pollution degree 4
in outdoor or exterior areas such as equipment mounted on the roofs of locomotives or tramcars.

Extract from IEC 60 664-1, Para. 2.5.1

Pollution degree 1: *No pollution or only dry, non-conductive pollution occurs. The pollution has no influence.*

Pollution degree 2: *Only non-conductive pollution occurs except that occasionally a temporary conductivity caused by condensation is to be excepted.*

Pollution degree 3: Conductive pollution occurs or dry non-conductive pollution occurs which becomes conductive due to condensation which is to be excepted.

Pollution degree 4: *The pollution generates persistent conductivity caused by conductive dust or by rain or snow.*

Special ruling for connectors

Subject to compliance with certain preconditions, the standard for device termination connectors permits a lower pollution degree than that which applies to the installation as a whole. This means that in a pollution degree 3 environment, connectors may be used which are electrically rated for pollution degree 2. The basis for this is contained in DIN EN 61 984, Para. 6.19.2.2.

Extract form DIN EN 61 984, Para. 6.19.2.2

For a connector with a degree of protection IP54 or higher according to IEC 60 529 the insulating parts inside the enclosure may be dimensioned for a lower pollution degree.

This also applies to mated connectors where enclosure is ensured by the connector housing and which may only be disengaged for test and maintenance purposes.

The conditions fulfills,

- a connector which is protected to at least IP54 as per IEC 60 529,
- a connector which is installed in a housing and which as described in the standard is disconnected for testing and maintenance purposes only,
- a connector which is installed in a housing and which when disconnected is protected by a cap or cover to at least IP54,
- a connector located inside a switching cabinet to at least IP54.

These conditions do not extend to connectors which when disconnected remain exposed to the industrial atmosphere for an indefinite period.

It should be noted that pollution can affect a connector from the inside of an installation outwards.

Typical applications in which to choose pollution degree 2 connectors:

- A connector serving a drive motor which is disconnected only for the purpose of replacing a defective motor, even when the plant or system otherwise calls for pollution degree 3.
- Connectors serving a machine of modular design which are disconnected for transport purposes only and enable rapid erection and reliable commissioning. In transit, protective covers or adequate packing must be provided to ensure that the connectors are not affected by pollution/contamination.
- Connectors located inside a switching cabinet to IP54. In such cases, it is even possible to dispense with the IP54 housings of the connectors themselves.

Specifying electrical data

Electrical data for connectors are specified as per DIN EN 61 984.

This example identifies a connector suitable for use in an unearthed power system or earthed delta circuit (see page 40.02, Table 5 of DIN EN 61 984):

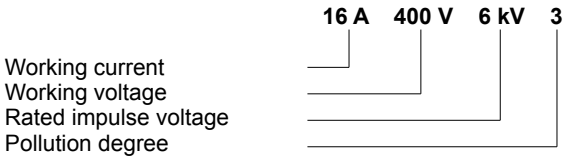

This example identifies a connector suitable exclusively for use in earthed power systems (see page 40.02, Table 5 of DIN EN 61 984):

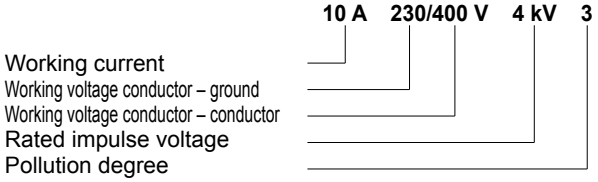

Other terms explained

Clearance air gap
The shortest distance through the air between two conductive elements (see IEC 60664-1, Para. 1.3.3). The air gaps are determined by the surge voltage withstand level.

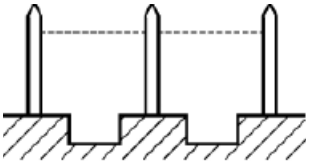

Creepage distance
Shortest distance on the surface of an insulating material between two conductive elements (see IEC 60664-1, Para. 1.3.3). The creepage distances are dependent on the rated voltage, the pollution degree and the characteristics of the insulating material.

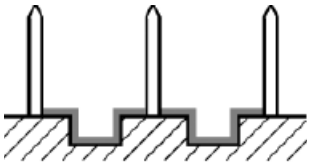

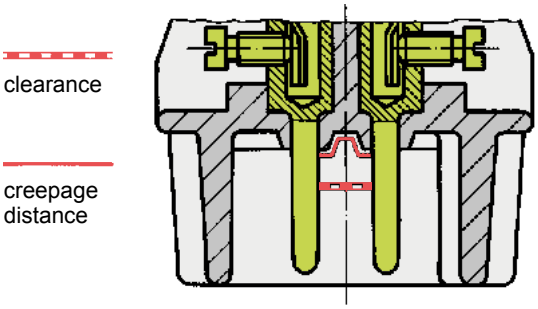

Working voltage
Fixed voltage value on which operating and performance data are based. More than one value for rated voltage or rated voltage range may be specified for the same connector.

Rated impulse voltage
The rated impulse voltage is determined on the basis of the overvoltage category and the nominal power supply voltage. This level in turn directly determines the test voltage for testing the overvoltage resistance of the connector *(Waveform voltage in 1.2/50 µs as per IEC 60060-1)*.

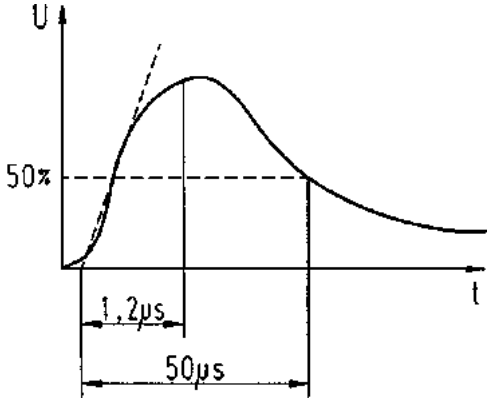

Working current
Fixed current, preferably at an ambient temperature of 40 °C, which the connector can carry on a permanent basis (without interruption), passing simultaneously through all contacts which are in turn connected to the largest possible conductors, without exceeding the upper temperature limit.
The dependence of the rated current on ambient temperature is illustrated in the respective derating diagrams.

Transient overvoltages
Short-term overvoltage lasting a few milliseconds or less, oscillatory or non-oscillatory, generally heavily damped (see IEC 60664-1, Para. 1.3.7.2). An overvoltage may occur as a result of switching activities, a defect or lightening surge, or may be intentionally created as a necessary function of the equipment or component.

Power-frequency withstand voltage
A power-frequency overvoltage (50/60 Hz).
Applied for a duration of one minute when testing dielectric strength.
For test voltages in association with surge voltage withstand levels, see extract from Table 8, DIN EN 61984.

Test voltages (Extract from Table 8, DIN EN 61984)

Impulse withstand voltage kV (1.2/50 µs)	RMS withstand voltage kV (50/60 Hz)
0.5	0.37
0.8	0.50
1.5	0.84
2.5	1.39
4	2.21
6	3.31
8	4.26
12	6.6

CTI (Comparative Tracking Index)
This figure gives an indication of the conductivity of insulating materials and affects the specified creepage distances. The influence of the CTI value on the creepage distance is as follows: the higher the index value, the shorter the creepage distance. The CTI is used to divide plastics into insulation groups.

Breakdown of insulation groups:

I	600 ≤ CTI
II	400 ≤ CTI < 600
IIIa	175 ≤ CTI < 400
IIIb	100 ≤ CTI < 175

Protection levels as per IEC 60529
The protection level describes the leak-proof character of housing, e. g. for electrical equipment. It ranges from IP00 to IP68. HARTING heavy duty Han connectors feature a standard protection level of IP65 (see page 40.16, table based on DIN VDE 0470, DIN EN 60529, IEC 60529).

Derating diagram as per DIN IEC 60512
These diagrams are used to illustrate the maximum current carrying capacity of components. The illustration follows a curve which shows the current in relation to ambient temperature. Current carrying capacity is limited by the thermal characteristics of contacts and insulating elements which have an upper temperature limit which should not be exceeded.

Current carrying capacity

The current carrying capacity is determined in tests which are conducted on the basis of the DIN IEC 60 512 part 5. The current carrying capacity is limited by the thermal properties of materials which are used for inserts as well as by the insulating materials. These components have a limiting temperature which should not be exceeded.

The relationship between the current, the temperature rise (loss at the contact resistance) and the ambient temperature of the connector is represented by a curve. On a linear co-ordinate system the current lies on the vertical line (ordinate) and the ambient temperature on the horizontal line (abscissa) which ends at the upper limiting temperature.

In another measurement the self-heating (Δt) at different currents is determined.

At least 3 points are determined which are connected to a parabolic curve, the basic curve.

The corrected current carrying capacity curve is derived from this basic curve. The reasons for the correction are external factors that bring an additional limitation to the current carrying capacity, i.e. connectable wire gauge or an unequal dispersion of current.

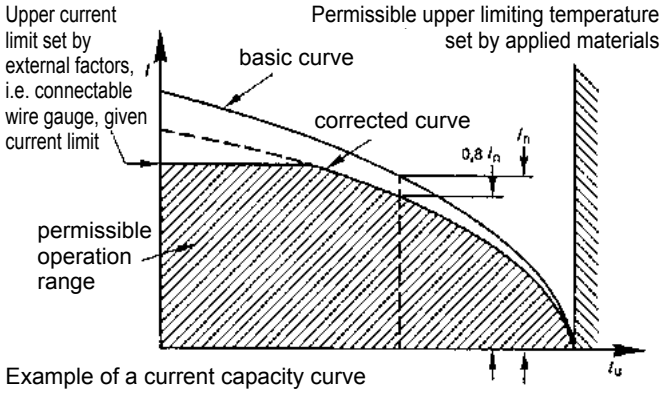

Example of a current capacity curve

Definition: The rated current is the continuous, not interrupted current a connector can take when simultaneous power on all contacts is given, without exceeding the maximum temperature.

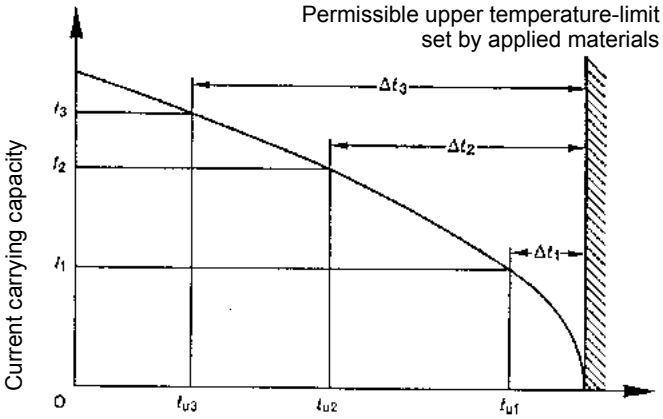

Example of a current carrying curve

Acc. to IEC 61 984 the sum of ambient temperature and the temperature rise of a connector shall not exceed the upper limiting temperature. The limiting temperature is valid for a complete connector, that means insert plus housing.

As a result the insert gives the limit for the temperature of a complete connector and thus housings as well.

In practice it is not usual to load all terminals simultaneously with the maximum current. In such a case one contact can be loaded with a higher current as permitted by the current capacity curve, if less than 20 % of the whole is loaded.

However, for these cases there are no universal rules. The limits have to be determined individually from case to case. It is recommended to proceed in accordance with the relevant rules of the DIN IEC 60 512 part 5.

Current carrying capacity of copper wires

Diameter [mm²] of single wires in a three-phase system		0.75	1	1.5	2.5	4	6	10	16	25	35
Type of installation											
B1	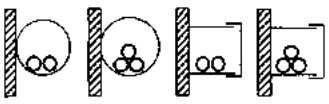 Wires in protective tubes and installation conduits	7.6	10.4	13.5	18.3	25	32	44	60	77	97
B2	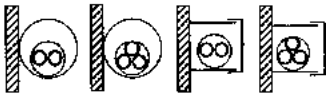 Cables and wires in protective tubes and installation conduits	–	9.6	12	16.5	23	29	40	53	67	83
C	Cables and wires at walls	–	11.7	15.2	21	28	36	50	66	84	104
D	Cables and wires on a bed	–	11.5	16.1	22	30	37	52	70	88	114
Depiction in accordance with DIN EN 60 204 for PVC-insulated copper wires in an ambient temperature of + 40 °C under permanent operating conditions.											
For different conditions and temperatures, installations, insulation materials or conductors the relevant corrections have to be carried out.											

Solder pins for printed circuit boards Solder pins for reflow soldering	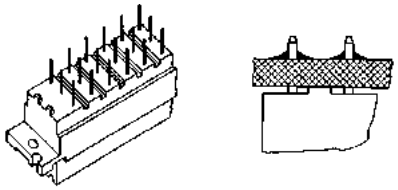
Solder lugs for discrete wiring	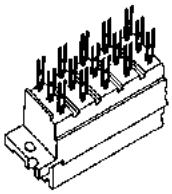
Press-in technology for printed circuit boards	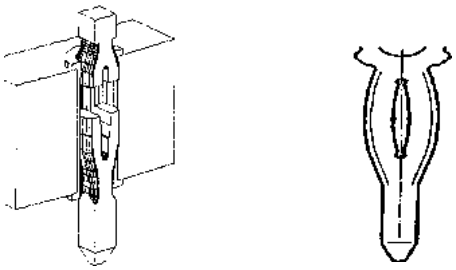
Crimp contacts for flexible wiring, selective loading and ease of replacement	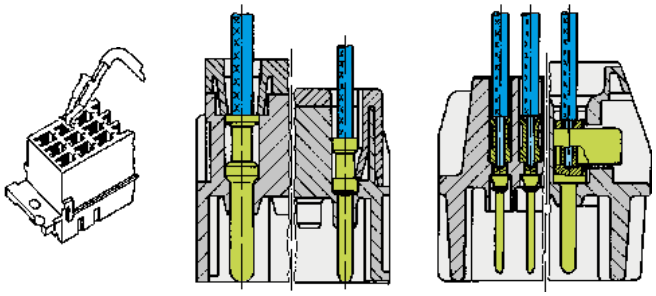
Insulation displacement contacts for mass termination of flat cable or round cable	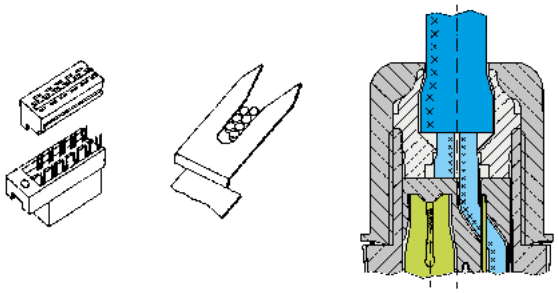
Faston blades for higher power discrete wiring	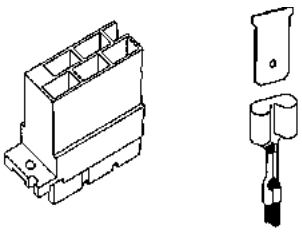

Screw terminal

Screw terminals meet VDE 0609 / EN 60 999. Dimensions and tightening torques for testing are shown opposite.

The relevant regulations state that in the case of

- Terminals with wire protection.
  – the use of ferrules is not necessary

Axial screw terminal

This termination associates the benefits of screw and crimp terminals.

- Less space required
- Easy handling
- No special tools

The axial screw termination is suitable for fine strands wires.

Cage-clamp terminal

This termination method requires very little preparation of the wire and no special tools, leading to a low installed cost and a high degree of mechanical security.

- For all stranded and solid wires with a cross section 0.14 to 2.5 mm².
- Ease of termination. Conductor and screwdriver are in same plane.
- No special preparation of stripped conductor.
- The larger the conductor the higher the clamping force.
- The termination is vibration-proof.
- Guaranteed constant low resistance connection of the cage-clamp terminal.
- The cage-clamp system is internationally approved. VDE, SEV, CSA, UL, ÖVE, SEMKO, LCIE (France), Germanischer Lloyd, DET Norske Veritas

Solder connection

The term “soldering” is defined in DIN 8505:

> “Soldering is a method of connecting metallic materials using an additional melting metal, if necessary with the assistance of a flux and/or protective gas. The melting temperature of the solder must lie beneath the minimum melting temperature of the base metals being connected. These base metals shall be tinned without melting themselves.”

Soft solders commonly used on electronic equipment are to DIN 1707-100. Todays lead free solders have a melting range between 217 °C and 227 °C depending on the composition of the alloy. For soldering metallic materials the flux is defined in DIN EN 29 454-1. Tests are explained in DIN 8526.

Screw dimensions and tightening torque for screw terminals

Wire gauge (mm²)	1.5	2.5	4	6	10	16
Screw thread	M 3	M 3	M 3.5	M 4	M 4	M 6
Test moment of torque (Nm)	0.5	0.5	0.8	1.2	1.2	1.2*
min. pull-out for stranded wire (N)	40	50	60	80	90	100

* for screws without heads (Han® K 4/8)

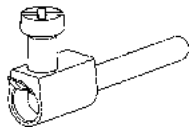

with wire protection

Remarks on the axial screw technique

The wire gauges mentioned in the catalogue refer to geometric wire gauges of cables.

Background:
According to DIN VDE 0295 for cables and insulated wires the wire gauge will be determined by conductance (Ω/km) and maximum wire diameter. A minimum cable diameter is not specified!
(Example: nominal wire gauge 95 mm² ➔ real, geometric wire gauge 89 mm²)

Recommendation:
The use of cables with extreme geometric wire gauge deviation should be checked separately with the use of the axial screw termination.

One conductor per termination — Slot for screwdriver

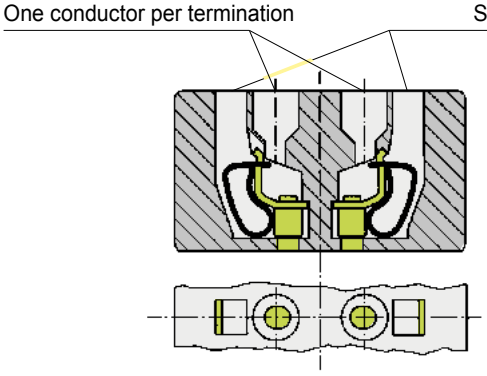

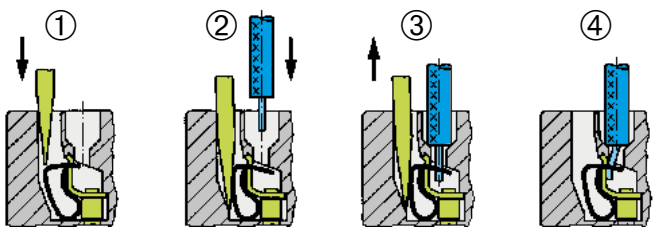

Screwdriver width: 3.0 x 0.5 mm

Solderless termination for connectors has proven to be reliable for decades. Today the use of press-in connectors encompasses all fields of electrical and electronical applications.

Pressing of electrical components, mainly connectors, is characterised through the matching of the connector pin and the plated through hole of the pcb. Whereas the desired electrical characteristics can be attained relatively independant from the design of the press-in zone, the mechanical characteristics of the press-in zone are crucial for the reliable assembly of connectors where pcb's have different surfaces.

Although the scope of requirements at the press-in process is generally defined in time-tested specifications, the novel press-in zones should offer an optimal handling and a reliable termination. Essentially, this is guaranteed through the design of the press-in zone and the meticulous observance of tolerances. HARTING has been using FEM simulations for the calculation and optimisation of press-in zones for a long period of time. This expertise allows us to simulate various pcb configurations very accurate.

Due to the high deformation resistance and resilience of har:press contacts, they can be easily and repeatedly removed in case of repairs without impairment to their functioning.

har:press is extremely versatile and offers a reliable electrical contact, therefore it is especially well suited for applications with these surfaces.

Please contact us for detailed test reports.

Benefits of the press-in technology

- Thermal shocks associated with the soldering process and the risk of the board malfunction are avoided.
- No need for the subsequent cleaning of the assembled pcb's
- Additional wrap connections are made possible by using connectors with long pins
- Unlimited and efficient processing of partially gold-plated pins for rear I/O - manual soldering is no longer necessary!

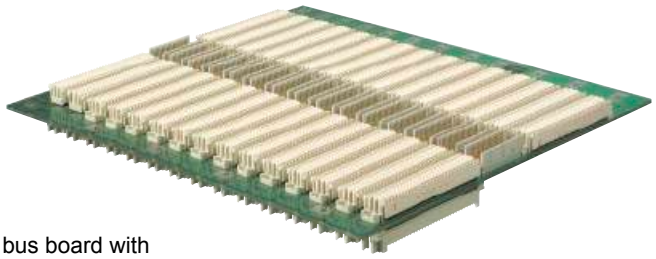

bus board with press-in connectors

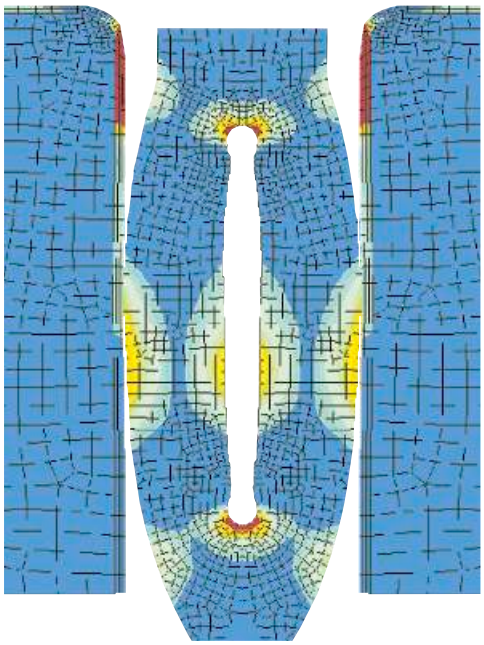

FEM simulation of the needle eye press-in zone

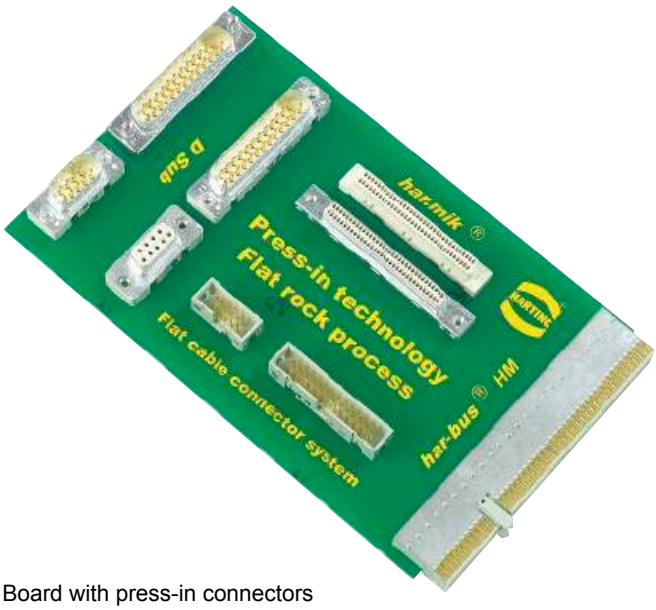

Board with press-in connectors

The processing of press-in connectors can be divided into 3 phases, containing both mechanical and metallurgical operations:

1. **Centering and placing of the termination pins**

   The centering of connectors before pressing is important in order to prevent damage to the pcb and the termination pins. Centering can be omitted when connectors are pressed using a flat rock die.

   HARTING offers insert blocks for male connectors to make the centering of connectors unnecessary.

2. **Pressing in the pins**

   In the press-in process the insertion force is continuously transformed into compression force. The resulting friction frees the contacting bars of insulating films. Superfluous plating (tin) is transferred within the plated through hole. A gas-tight connection of fresh non-oxidised metal surfaces is obtained.

3. **Obtaining the final position**

   The press-in operation should be terminated as soon as the connector obtains its final position on the pcb to avoid unnecessary compressive stress. The press-in machines of HARTING feature automatic termination of the press-in operation independant of pcb thickness and surface properties.

The entire dynamic press-in process is characterised through changes of the press-in force that can be statistically evaluated. HARTING records the changes of force with the help of special software. This is an important step towards permanent process control and documented manufacturing data.

The har:press-zone is based on the industry renowned needle eye technology. Its special design allows for compensation of tolerances of pcb surface properties (eg. superfluous tin plating). The excessive material is displaced within the plated through hole, whereby a gas-tight and corrosion resistant electrical connection is assured.

Phase 1

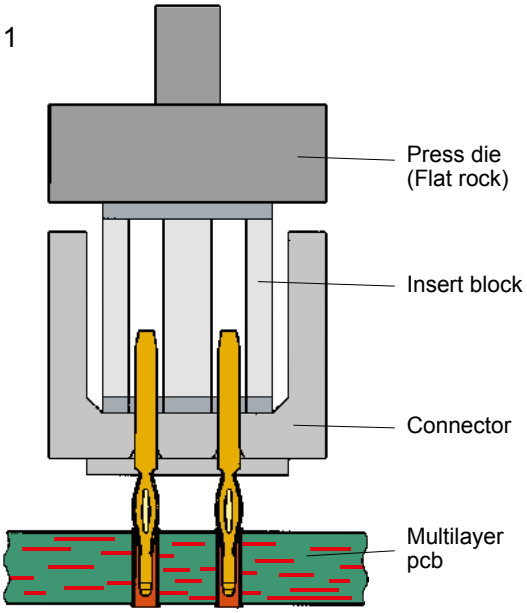

Phase 2

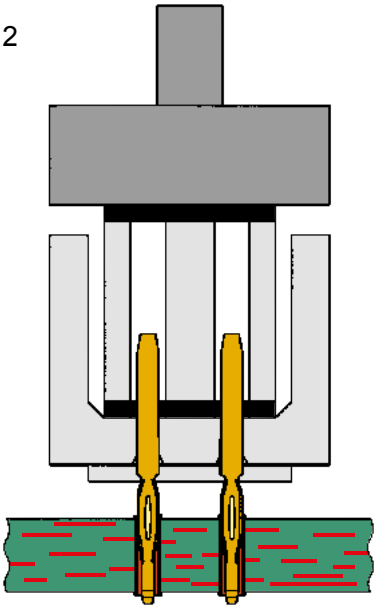

Phase 3

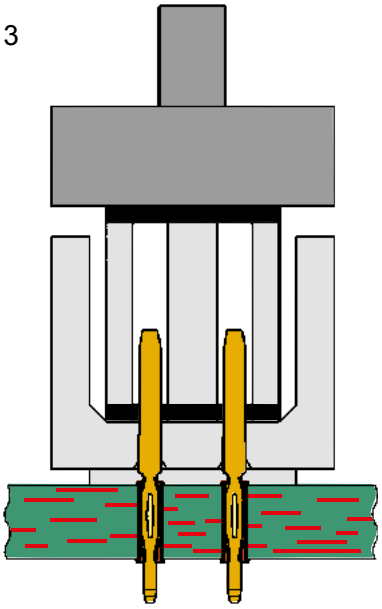

Recommended configuration of plated through holes

In addition to the hot-air-level (HAL) other pcb surfaces are getting more important. Due to their different properties, such as mechanical strength and coefficient of friction we recommend the following configuration of pcb through holes.

Tin-lead plated PCB (HAL) acc. EN 60 352-5	Hole-Ø	$1.15^{\pm 0.025}$ mm
	Cu	min. 25 µm
	Sn	max. 15 µm
	Plated hole-Ø	0.94-1.09 mm
Chemical tin-plated PCB	Hole-Ø	$1.15^{\pm 0.025}$ mm
	Cu	min. 25 µm
	Sn	min. 0.8 µm
	Plated hole-Ø	1.00-1.10 mm
Au / Ni plated PCB	Hole-Ø	$1.15^{\pm 0.025}$ mm
	Cu	min. 25 µm
	Ni	3-7 µm
	Au	0.05-0.12 µm
	Plated hole-Ø	1.00-1.10 mm
Silver plated PCB	Hole-Ø	$1.15^{\pm 0.025}$ mm
	Cu	min. 25 µm
	Ag	0.1-0.3 µm
	Plated hole-Ø	1.00-1.10 mm
OSP copper plated PCB	Hole-Ø	$1.15^{\pm 0.025}$ mm
	Cu	min. 25 µm
	Plated hole-Ø	1.00-1.10 mm

PCB board thickness: ≥ 1.6 mm

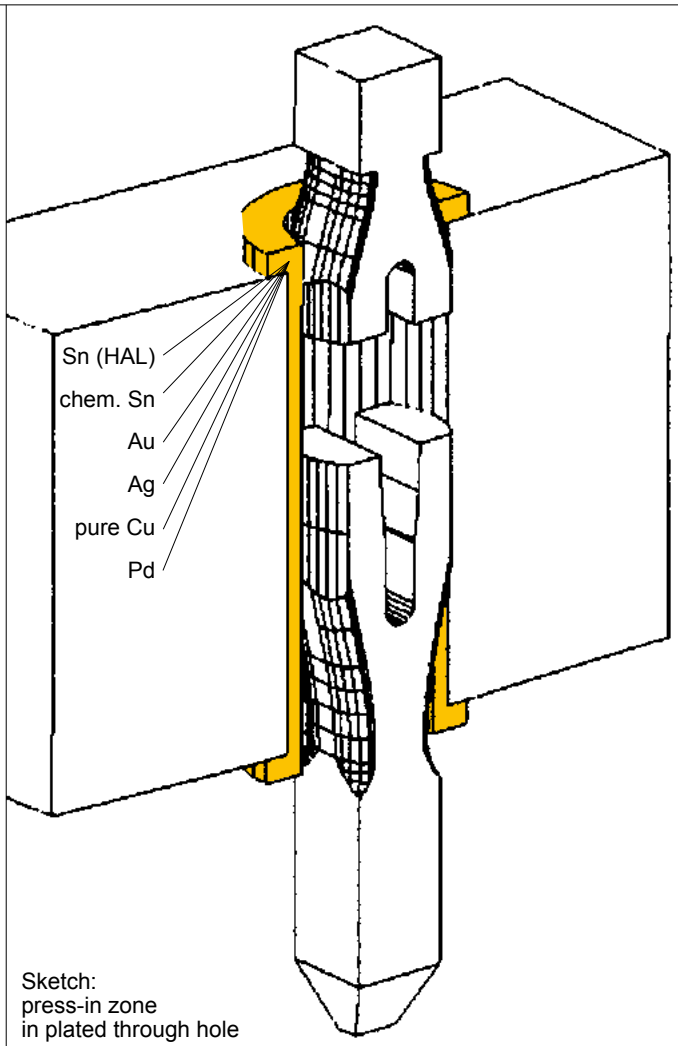

Sketch:
press-in zone
in plated through hole

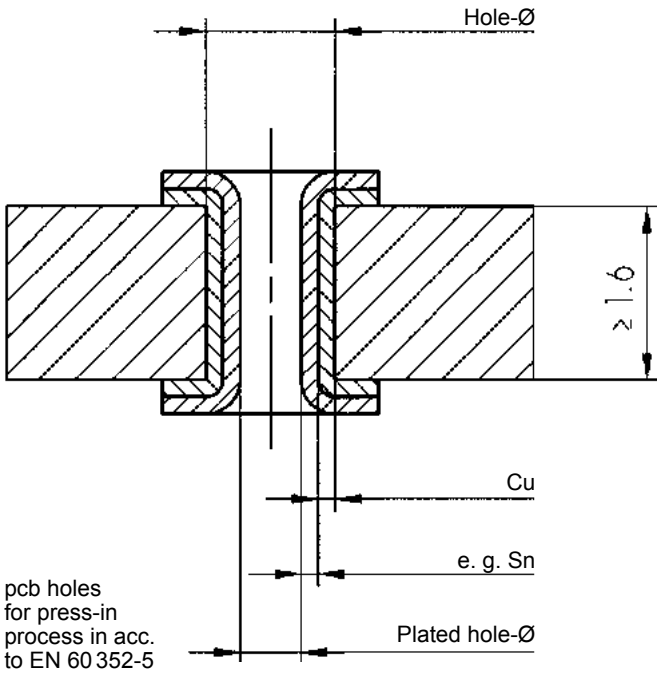

pcb holes
for press-in
process in acc.
to EN 60 352-5

Quality control of the press-in termination

The press-in force correlates with the diameter of the plated through hole and with the friction coefficient of the surface; therefore it can be used for a continuous monitoring of the process.

The retention force, as an indirect measure of the normal force, serves to qualify the process or random tests

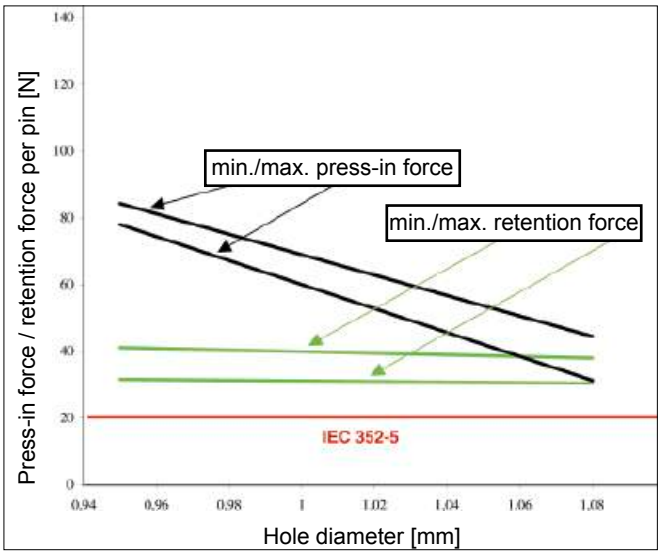

Typical press-in and retention forces for the D-Sub press-in zone

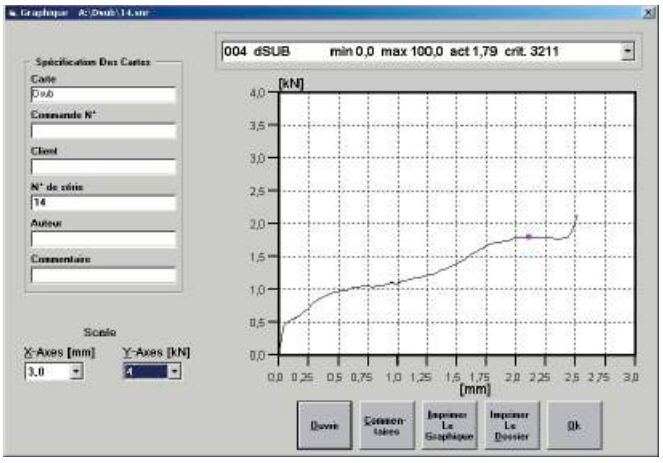

The automatic press-in machines of HARTING feature a graphical user interface for monitoring the process and the quality of the press-in termination (see chapter 20).

HARTING assists you with the most advanced quality assurance methods beyond the usual scope.

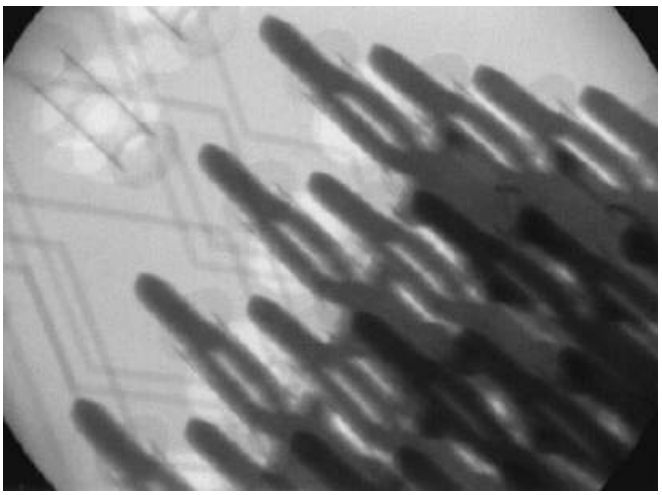

X-ray photo of a pressed-in connector

Introduction of the Pin in Hole Intrusive Reflow Process

The continuing trend towards miniaturisation has revolutionised the assembly of electronic components. For the past 15 years, most components have been secured directly to the pcb surface by means of Surface Mount Technology (SMT). By dispensing with drilled holes on the pcb, a space saving of up to 70 percent is achieved.

Today, typical components such as resistors, ICs, capacitors, and connectors with straight terminal pins are almost exclusively fitted using SMD (Surface Mount Device) technology in mass production. In contrast, angled SMD connectors at the edge of the board have not been successful because of tolerance problems (co-planarity) and stresses during mating. Modified solder connectors for assembly with „Pin in Hole Intrusive Reflow“ process offer a better solution. These can be mounted at low cost, utilising existing SMD production lines.

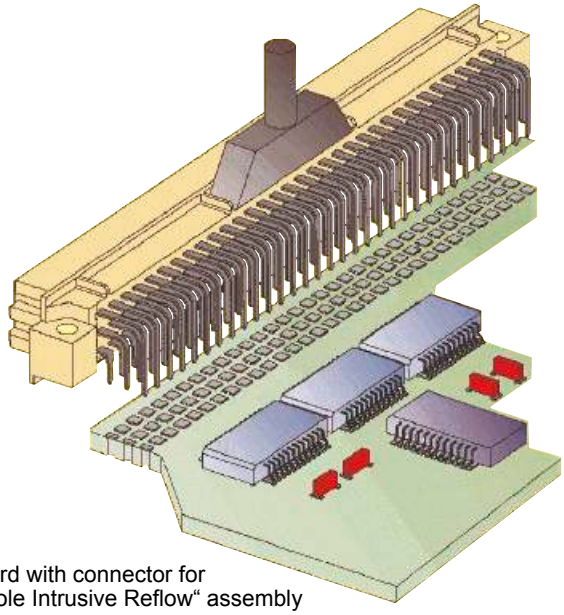

SMT board with connector for „Pin in Hole Intrusive Reflow“ assembly

“Pin in Hole Intrusive Reflow“

In this process, the connector is inserted into plated through holes in a comparable way to conventional component mounting. All other components can be assembled on the pcb surface.

The components are positioned using pick-and-place machines. These automatic assembly machines differ according to whether the components are small, lightweight or bulky. Connectors are considered bulky (odd form) because of their comparatively heavy weight and large volume which makes them more difficult to grip. Furthermore, machines for odd form components must have higher insertion power to fit the components into pcb holes, which are filled with solder paste. As a rule, modern SMC production lines are equipped with both types of machine, therefore the „Pin in Hole Intrusive Reflow“ process generally entails no extra investment costs for the user.

Conventional assembly process:

1. Application of solder paste
2. Positioning the components
3. Positioning odd form components
4. Reflow soldering
5. Pressing in or partially dip soldering the connector at the board edge
6. Quality inspection

„Pin in Hole Intrusive Reflow“ assembly:

1. Application of solder paste
2. Positioning the components
3. Positioning odd form components
4. Reflow soldering
5. ~~Pressing in or partially dip soldering the connector at the board edge~~
6. Quality inspection

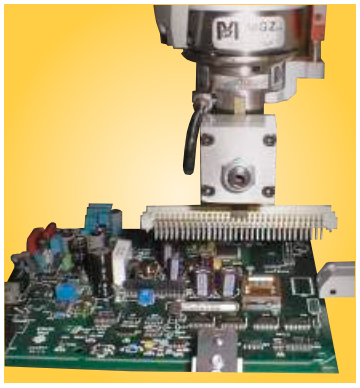

Pick-and-place machine for odd form components (Courtesy of JOT Automation GmbH)

Application of solder paste

Before the components are assembled, solder paste must be applied to all the solder pads (for connecting surface-mount components) and the plated through contacts (pcb holes for „Pin in Hole Intrusive Reflow“ insertion). Usually a screen printing process is used for this purpose. A squeegee moves across the pcb, which is masked with screens and presses the solder paste into all unmasked areas. To ensure that the plated through holes are completely filled, significantly more solder paste must be applied than traditional solder pads on the pcb surface. The required quantity can be set exactly via several parameters.

As an alternative to screen printing, the solder paste can be applied by means of a dispenser. A high-precision robot moves the dispenser to all required positions on the pcb. The dispensing method is particularly suitable for small pcb's or applications which demand high precision and flexibility in dispensing volumes.

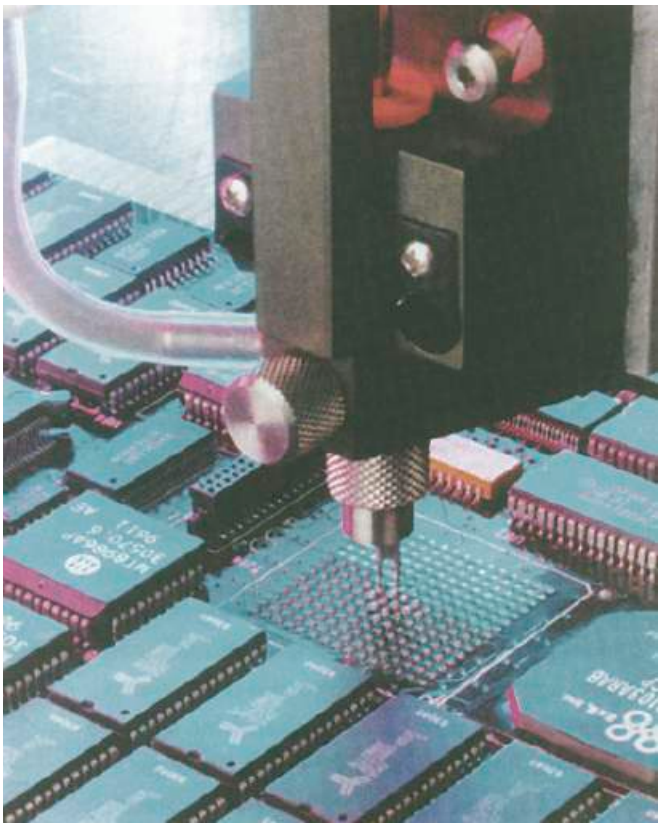

Dispenser in operation

Requirements for the solder connection

There are numerous scientific studies dealing with calculation of the required quantity of solder paste. These studies use various parameters, e.g. the shrinking factor of the paste during soldering or the thickness of the screens used for masking the pcb. Since such calculation methods are complicated to apply, the following rule of thumb has proved valuable in practice:

$$V_{Paste} = 2(V_H - V_P)$$

in which:

V_{Paste} = Required volume of solder paste

V_H = Volume of the plated through hole

V_P = Volume of the connector termination in the hole

Comment: the multiplier „2“ compensates for solder paste shrinkage during soldering. For this purpose, it was assumed that 50 % of the paste consists of the actual solder, the other 50 % being soldering aids.

At the beginning of a new production batch, the process parameters, such as quantity of solder paste and soldering temperature, can be set by interpreting simple cross-sections of the soldered connection. A reliable measure for achieving optimum parameters is the quantity of solder required to fill the hole. In soldered connections of high quality, the holes are filled to between 75 % and 100 %.

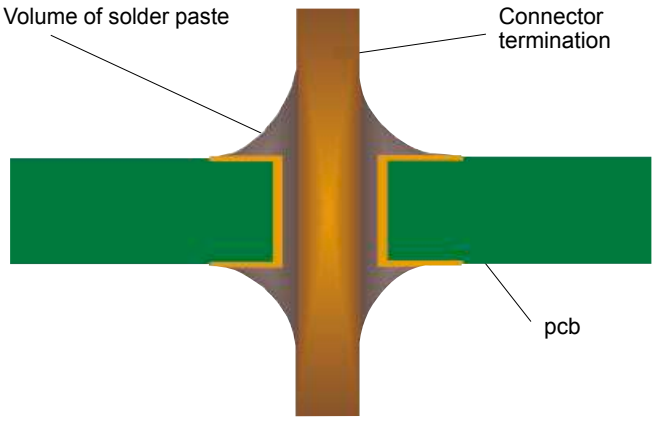

Plated through hole with connector termination

SMC connectors

SMC (Surface Mount Compatible) connectors have to withstand temperatures of up to 225°C in the reflow oven for 10 to 15 seconds. Therefore, the moulding must be made from a dimensionally stable plastic which expands at the same rate as the pcb material when subjected to heat.

The length of the connector contacts should be such that they protrude by no more than 1.5 millimetres after insertion to the pcb. Each contact collects solder on its tip as it penetrates the solder paste in the hole. So if the contact was too long, this solder would no longer be able to reflow back into the plated through hole by capillary action during the soldering process, therefore the quality of the soldered connection would suffer as a result.

Connector design must permit both automatic assembly with pick-and-place machines and manual positioning for test and pre-production batches. It is also important for the packaging of the connectors to be suitable for automated assembly. Experience shows that deep-drawn film and reel packaging fed into the pick-and-place machines with the aid of a conveyor system is particularly suitable.

Advantages for using SMC connectors are:

- Partial dip soldering or press-in is no longer required
- High mechanical stability
- Complete compatibility with Surface Mount Technology
- Savings through integration into the automated assembly process
- Reduced floor space in the production plant

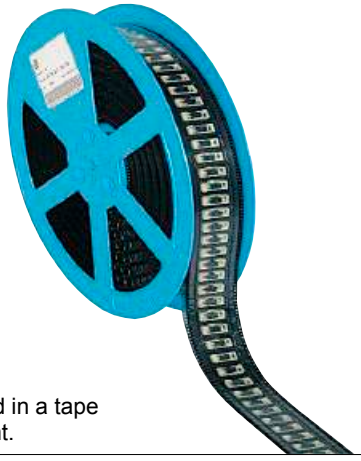

HARTING connector mounted in a tape ready for automatic placement.

HARTING SMC technology

HARTING offers its customers a complete system concept for integrating SMC technology into existing production lines. We manufacture a wide range of SMC connectors (3 and 5 row) in compliance with IEC 60 603-2, D-Sub connectors in compliance with IEC 60 807 and connectors from the har-mik® series with contact spacing of 1.27 millimetres. In addition, HARTING supports the market with packaging and processing concepts, which have been developed in collaboration with renowned manufacturers of SMC soldering and assembly plants.

Advantages of the „Pin in Hole Intrusive Reflow“ process:

- Partial dip soldering or press fitting is no longer required
- Complete compatibility with Surface Mount Technology
- Complete integration into the automated assembly process
- Reduced floor space in the production plant
- As a rule, no additional investment costs

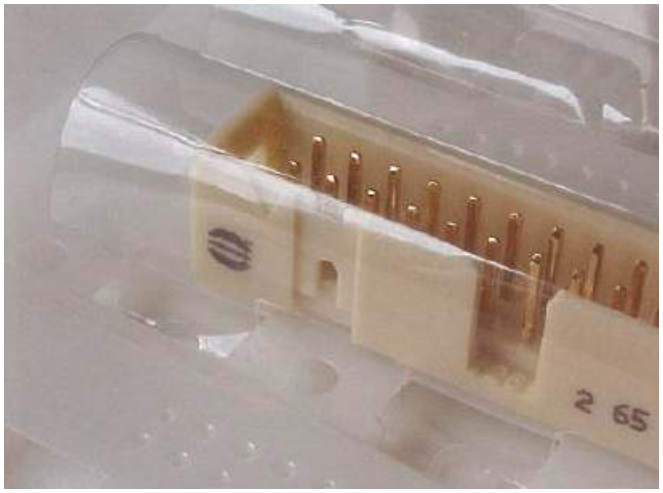

HARTING connector mounted in a tape ready for placement using an odd form assembly station.

Crimp connection

A perfect crimp connection is gastight, therefore corrosion free and amounts to a cold weld of the parts being connected. For this reason, major features in achieving high quality crimp connections are the design of the contact crimping parts and of course the crimping tool itself. Wires to be connected must be carefully matched with the correct size of crimp contacts. If these basic requirements are met, users will be assured of highly reliable connections with low contact resistance and high resistance to corrosive attack.

The economic and technical advantages are:

- Constant contact resistance as a result of precisely repeated crimp connection quality
- Corrosion free connections as a result of cold weld action
- Pre-preparation of cable forms with crimp contacts fitted
- Optimum cost cable connection

Requirements for crimp connectors are laid down in DIN IEC 60 352-2, Amend. 2, as illustrated in the table.

Pull out force of stranded wire

The main criterion by which to judge the quality of a crimp connection is the retention force achieved by the wire conductor in the terminal section of the contact. DIN IEC 60 352, part 2, defines the extraction force in relation to the cross-section of the conductor.

When fitted using HARTING crimping tools and subject to their utilization in an approved manner, our crimp connectors comply with the required extraction forces.

Crimping tools

Crimping tools (hand operated or automatic) are carefully designed to produce with high pressure forming parts a symmetrical connection of the crimping part of the contact and the wire being connected with the minimum increase in size at the connection point. The positioner automatically locates the crimp and wire at the correct point in the tool.

A ratchet in the tool performs 2 functions:

It prevents insertion of the crimp into the tool for crimping before the jaws are fully open

It prevents the tool being opened before the crimping action is completed

Identical, perfectly formed, connections can be produced using this crimping system.

Crimp-cross section

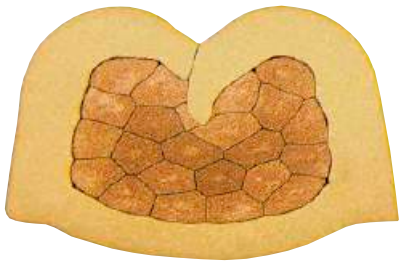

B shape cross section stamped contact

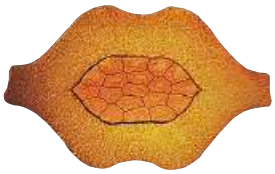

H shape
cross section turned contact

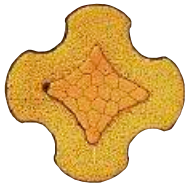

4 points shape
cross section turned contact

Tensile strength of crimped connections

Conductor cross-section		Tensile strength
mm²	AWG	N
0.05	30	6
0.08	28	11
0.12	26	15
0.14		18
0.22	24	28
0.25		32
0.32	22	40
0.5	20	60
0.75		85
0.82	18	90
1.0		108
1.3	16	135
1.5		150
2.1	14	200
2.5		230
3.3	12	275
4.0		310
5.3	10	355
6.0		360
8.4	8	370
10.0		380

Extract from DIN IEC 60 352-2, Amend. 2, Table IV

Hoods/housings connector insert protection

The connector's housing, sealing and locking mechanism protect the connection from external influences such as mechanical shocks, foreign bodies, humidity, dust, water or other fluids such as cleansing and cooling agents, oils, etc. The degree of protection the housing offers is explained in the IEC 60 529, DIN EN 60 529, standards that categorize enclosures according to foreign body and water protection.

The following table shows the different degrees of protection.

Code letters (International Protection) — **IP**

First Index Figure (Foreign bodies protection) — **6**

Second Index Figure (Water protection) — **5**

Index figure	Degree of protection			Index figure	Degree of protection		
0	No protection		No protection against accidental contact, no protection against solid foreign bodies	**0**	No protection against water		No protection against water
1	Protection against large foreign bodies		Protection against contact with any large area by hand and against large solid foreign bodies with Ø > 50 mm	**1**	Drip-proof		Protection against vertical water drips
2	Protection against medium sized foreign bodies	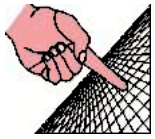	Protection against contact with the fingers, protection against solid foreign bodies with Ø > 12 mm	**2**	Drip-proof		Protection against water drips (up to a 15° angle)
3	Protection against small solid foreign bodies	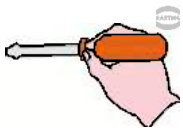	Protection against tools, wires or similar objects with Ø > 2.5 mm, protection against small foreign solid bodies with Ø > 2.5 mm	**3**	Spray-proof		Protection against diagonal water drips (up to a 60° angle)
4	Protection against grain-shaped foreign bodies	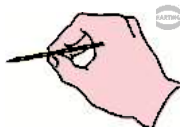	As 3 however Ø > 1 mm	**4**	Splash-proof		Protection against splashed water from all directions
5	Protection against injurious deposits of dust		Full protection against contact. Protection against interior injurious dust deposits	**5**	Hose-proof		Protection against water (out of a nozzle) from all directions
6	Protection against ingress of dust		Total protection against contact. Protection against penetration of dust	**6**	Strong hose-proof		Protection against strong water (out of a nozzle) from all directions
				7	Protected against immersion		Protected against temporary immersion
				8	Water-tight	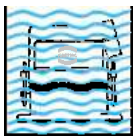	Protected against water pressure

Description according to DIN EN 60 529, IEC 60 529

List of part numbers

Part number	Page
02 99 000 0002	20.29
07 11 100 0023	10.08
07 11 100 0024	10.08
07 11 100 0026	10.08
07 11 900 0023	10.08
07 11 900 0024	10.08
07 31 100 0019	10.09
07 31 100 0020	10.09
07 31 100 0021	10.09
07 31 100 0028	10.10
07 31 900 0021	10.09
07 31 900 0022	10.09
07 71 100 0042	10.15
07 73 000 0280	11.47
07 73 000 0393	10.16
07 73 000 0394	10.16
07 79 000 0034	20.36
07 79 000 0045	20.36
07 79 000 0061	20.36
07 79 000 0080	20.36
07 79 000 0081	20.36
07 79 000 0155	20.34
07 79 000 0156	20.34
07 79 000 0170	20.36
07 79 000 0171	20.36
07 79 000 0204	20.36
07 79 000 0205	20.36
09 00 000 5058	04.43
09 00 000 5059	04.40
09 00 000 5157	04.40
09 00 000 5158	04.40
09 02 264 6828	08.33
09 02 264 7828	08.33
09 03 000 9940	08.33
09 03 264 6828	08.33
09 03 264 7828	08.33
09 03 764 6828	08.33
09 12 000 9901	04.32
09 12 000 9902	04.32
09 12 000 9905	04.30
09 12 000 9908	04.32
09 12 000 9912	04.42
09 12 001 2774	04.29
09 12 001 2794	04.29
09 12 001 3071	04.29
09 12 001 3091	04.29
09 12 002 2611	04.23
09 12 002 2701	04.23
09 12 002 3011	04.23
09 12 002 3101	04.23
09 12 003 2770	04.27
09 12 003 2774	04.27
09 12 003 2776	04.27
09 12 003 3011	04.27
09 12 003 3021	04.27
09 12 003 3031	04.27
09 12 004 2601	04.25
09 12 004 2603	04.25
09 12 004 2606	04.25
09 12 004 2611	04.25
09 12 004 2701	04.25
09 12 004 2711	04.25
09 12 004 2713	04.25
09 12 004 2716	04.25
09 12 004 3001	04.25
09 12 004 3003	04.25
09 12 004 3006	04.25
09 12 004 3011	04.23
09 12 004 3011	04.25
09 12 004 3101	04.23
09 12 004 3101	04.25
09 12 004 3111	04.25
09 12 004 3113	04.25
09 12 004 3116	04.25
09 12 005 3001	04.30
09 12 005 3101	04.30
09 12 006 2611	04.22
09 12 006 2611	04.23
09 12 006 2691	04.24
09 12 006 2692	04.24
09 12 006 2694	04.22
09 12 006 2694	04.24
09 12 006 2695	04.22
09 12 006 2695	04.24
09 12 006 2701	04.22
09 12 006 2701	04.23
09 12 006 2791	04.24
09 12 006 2792	04.24
09 12 006 2794	04.22
09 12 006 2794	04.24
09 12 006 2795	04.22
09 12 006 2795	04.24
09 12 006 3001	04.22
09 12 006 3001	04.23
09 12 006 3041	04.36
09 12 006 3111	04.22
09 12 006 3111	04.23
09 12 006 3141	04.36
09 12 006 9901	04.36
09 12 007 3001	04.32
09 12 007 3101	04.32
09 12 008 0301	04.43
09 12 008 0303	04.43
09 12 008 0327	04.36
09 12 008 0327	04.38
09 12 008 0327	04.42
09 12 008 0427	04.40
09 12 008 0428	04.40
09 12 008 0429	04.40
09 12 008 0527	04.40
09 12 008 0727	04.42
09 12 008 0901	04.42
09 12 008 0902	04.42
09 12 008 3001	04.38
09 12 008 3101	04.38
09 12 008 5407	04.41
09 12 008 5408	04.41
09 12 008 9901	04.38
09 12 708 0301	04.43
09 14 000 0304	04.48
09 14 002 2601	04.48
09 14 002 2603	04.48
09 14 002 2701	04.48
09 14 002 2703	04.48
09 14 006 0303	04.48
09 14 006 0313	04.48
09 14 010 0303	04.48
09 14 010 0313	04.48
09 14 012 3001	04.48
09 14 012 3101	04.48
09 14 016 0303	04.48
09 14 016 0313	04.48
09 14 024 0303	04.48
09 14 024 0313	04.48
09 15 000 6190	04.32
09 15 000 6191	04.36
09 15 000 6191	04.44
09 15 000 6191	04.48
09 15 000 6290	04.32
09 15 000 6291	04.44
09 15 000 6291	04.48
09 15 000 6293	04.36
09 15 003 3001	04.26
09 15 003 3101	04.26
09 15 004 3013	04.26
09 15 004 3113	04.26
09 15 300 0301	03.148
09 15 300 0311	03.148
09 15 300 0401	03.149
09 15 300 0402	03.149
09 15 300 0412	03.149
09 15 300 0431	03.149
09 15 300 5401	03.149
09 15 300 5411	03.148
09 16 000 9905	04.44
09 16 000 9905	04.48
09 16 000 9908	04.44
09 16 000 9908	04.48
09 16 024 3001	04.44
09 16 024 3101	04.44
09 16 042 3001	04.44
09 16 042 3101	04.44
09 16 072 3001	04.44
09 16 072 3101	04.44
09 16 108 3001	04.44
09 16 108 3101	04.44
09 17 014 9622	08.31
09 17 016 9622	08.31
09 17 024 9622	08.31
09 17 028 9622	08.31
09 17 040 9622	08.31
09 18 000 9901	08.16
09 18 000 9901	08.20
09 18 000 9901	08.23
09 18 000 9901	08.48
09 18 000 9903	08.16
09 18 000 9903	08.20
09 18 000 9904	08.16
09 18 000 9904	08.20
09 18 000 9905	08.14
09 18 000 9905	08.15
09 18 000 9905	08.23
09 18 000 9905	08.46
09 18 000 9905	08.47
09 18 000 9905 58U	08.23
09 18 000 9906	08.16
09 18 000 9906	08.20
09 18 000 9906	08.48
09 18 006 7001	08.50
09 18 006 7001 900	08.50
09 18 006 7004	08.50
09 18 006 7005	08.51
09 18 009 7001	05.196
09 18 009 7001	08.50
09 18 009 7001 900	08.50
09 18 009 7004	05.196
09 18 009 7004	08.50
09 18 009 7005	05.197
09 18 009 7005	08.51
09 18 009 7007	05.198
09 18 009 7007	08.52
09 18 009 7008	05.198
09 18 009 7008	08.52
09 18 010 7001	08.50
09 18 010 7001 900	08.50
09 18 010 7004	08.50
09 18 010 7005	08.51
09 18 010 7006	08.51
09 18 010 7007	08.52
09 18 010 7008	08.52
09 18 010 7010	08.52
09 18 014 7001	08.50
09 18 014 7001 900	08.50
09 18 014 7004	08.50
09 18 014 7005	08.51
09 18 014 7006	08.51
09 18 014 7007	08.52
09 18 014 7008	08.52
09 18 014 7010	08.52
09 18 015 7001	05.196
09 18 015 7001	08.50
09 18 015 7001 900	08.50
09 18 015 7004	05.196
09 18 015 7004	08.50
09 18 015 7005	05.197
09 18 015 7005	08.51
09 18 015 7007	05.198
09 18 015 7007	08.52
09 18 015 7008	05.198
09 18 015 7008	08.52
09 18 016 7001	08.50
09 18 016 7001 900	08.50
09 18 016 7004	08.50
09 18 016 7005	08.51
09 18 016 7006	08.51
09 18 016 7007	08.52
09 18 016 7008	08.52

List of part numbers

Part number	Page
09 18 018 7001	08.50
09 18 018 7001 900	08.50
09 18 018 7004	08.50
09 18 018 7005	08.51
09 18 020 7001	08.50
09 18 020 7001 900	08.50
09 18 020 7004	08.50
09 18 020 7005	08.51
09 18 020 7006	08.51
09 18 020 7007	08.52
09 18 020 7008	08.52
09 18 024 7001	08.50
09 18 024 7001 900	08.50
09 18 024 7004	08.50
09 18 024 7005	08.51
09 18 025 7001	05.196
09 18 025 7001	08.50
09 18 025 7001 900	08.50
09 18 025 7004	05.196
09 18 025 7004	08.50
09 18 025 7005	05.197
09 18 025 7005	08.51
09 18 025 7007	05.198
09 18 025 7007	08.52
09 18 025 7008	05.198
09 18 025 7008	08.52
09 18 026 7001	08.50
09 18 026 7001 900	08.50
09 18 026 7004	08.50
09 18 026 7005	08.51
09 18 026 7006	08.51
09 18 026 7007	08.52
09 18 026 7008	08.52
09 18 028 7001	08.50
09 18 028 7001 900	08.50
09 18 028 7004	08.50
09 18 028 7005	08.51
09 18 030 7001	08.50
09 18 030 7004	08.50
09 18 030 7005	08.51
09 18 034 7001	08.50
09 18 034 7001 900	08.50
09 18 034 7004	08.50
09 18 034 7005	08.51
09 18 034 7006	08.51
09 18 034 7007	08.52
09 18 034 7008	08.52
09 18 037 7001	05.196
09 18 037 7001	08.50
09 18 037 7001 900	08.50
09 18 037 7004	05.196
09 18 037 7004	08.50
09 18 037 7005	05.197
09 18 037 7005	08.51
09 18 037 7007	05.198
09 18 037 7007	08.52
09 18 037 7008	05.198
09 18 037 7008	08.52
09 18 037 7010	05.198
09 18 037 7010	08.52
09 18 040 7001	08.50
09 18 040 7001 900	08.50
09 18 040 7004	08.50
09 18 040 7005	08.51
09 18 040 7006	08.51
09 18 040 7007	08.52
09 18 040 7008	08.52
09 18 040 7010	08.52
09 18 050 7001	08.50
09 18 050 7001 900	08.50
09 18 050 7004	08.50
09 18 050 7005	08.51
09 18 050 7006	08.51
09 18 050 7007	08.52
09 18 050 7008	08.52
09 18 060 7001	08.50
09 18 060 7001 900	08.50
09 18 060 7004	08.50
09 18 060 7005	08.51
09 18 060 7006	08.51
09 18 060 7007	08.52
09 18 060 7008	08.52
09 18 064 7001	08.50
09 18 064 7001 900	08.50
09 18 064 7004	08.50
09 18 064 7005	08.51
09 18 064 7006	08.51
09 18 064 7007	08.52
09 18 064 7008	08.52
09 18 064 7010	08.52
09 18 104 9002	08.27
09 18 104 9422	08.26
09 18 104 9423	08.25
09 18 104 9622	08.26
09 18 104 9623	08.25
09 18 106 9002	08.27
09 18 106 9422	08.26
09 18 106 9423	08.25
09 18 106 9622	08.26
09 18 106 9623	08.25
09 18 108 9002	08.27
09 18 108 9422	08.26
09 18 108 9423	08.25
09 18 108 9622	08.26
09 18 108 9623	08.25
09 18 110 9002	08.27
09 18 110 9422	08.26
09 18 110 9423	08.25
09 18 110 9622	08.26
09 18 110 9623	08.25
09 18 114 9002	08.27
09 18 114 9422	08.26
09 18 114 9423	08.25
09 18 114 9622	08.26
09 18 114 9623	08.25
09 18 116 9002	08.27
09 18 116 9422	08.26
09 18 116 9423	08.25
09 18 116 9622	08.26
09 18 116 9623	08.25
09 18 120 9002	08.27
09 18 120 9422	08.26
09 18 120 9423	08.25
09 18 120 9622	08.26
09 18 120 9623	08.25
09 18 124 9002	08.27
09 18 124 9422	08.26
09 18 124 9423	08.25
09 18 124 9622	08.26
09 18 124 9623	08.25
09 18 126 9002	08.27
09 18 126 9422	08.26
09 18 126 9423	08.25
09 18 126 9622	08.26
09 18 126 9623	08.25
09 18 130 9002	08.27
09 18 130 9422	08.26
09 18 130 9423	08.25
09 18 130 9622	08.26
09 18 130 9623	08.25
09 18 134 9002	08.27
09 18 134 9422	08.26
09 18 134 9423	08.25
09 18 134 9622	08.26
09 18 134 9623	08.25
09 18 140 9002	08.27
09 18 140 9422	08.26
09 18 140 9423	08.25
09 18 140 9622	08.26
09 18 140 9623	08.25
09 18 150 9002	08.27
09 18 150 9422	08.26
09 18 150 9423	08.25
09 18 150 9622	08.26
09 18 150 9623	08.25
09 18 160 9002	08.27
09 18 160 9422	08.26
09 18 160 9423	08.25
09 18 160 9622	08.26
09 18 160 9623	08.25
09 18 164 9002	08.27
09 18 164 9422	08.26
09 18 164 9423	08.25
09 18 164 9622	08.26
09 18 164 9623	08.25
09 18 500 9902	08.16
09 18 500 9902	08.20
09 18 500 9902	08.48
09 18 506 5004	08.10
09 18 506 5014	08.10
09 18 506 5024	08.10
09 18 506 5322	08.15
09 18 506 5323	08.14
09 18 506 5324	08.15
09 18 506 5329	08.35
09 18 506 5803	08.22
09 18 506 5803 58U	08.22
09 18 506 5813 58U	08.22
09 18 506 5804	08.22
09 18 506 5813	08.22
09 18 506 5814	08.22
09 18 506 5901	08.06
09 18 506 5902	08.08
09 18 506 5903	08.06
09 18 506 5904	08.08
09 18 506 5906	08.18
09 18 506 5907	08.18
09 18 506 5911	08.06
09 18 506 5912	08.08
09 18 506 5913	08.06
09 18 506 5914	08.08
09 18 506 5916	08.18
09 18 506 5917	08.18
09 18 506 5921	08.06
09 18 506 5922	08.08
09 18 506 5923	08.06
09 18 506 5924	08.08
09 18 506 5926	08.18
09 18 506 5927	08.18
09 18 506 5953	08.12
09 18 506 5963	08.12
09 18 506 5973	08.12
09 18 506 6004	08.10
09 18 506 6014	08.10
09 18 506 6024	08.10
09 18 506 6322	08.15
09 18 506 6323	08.14
09 18 506 6324	08.15
09 18 506 6329	08.35
09 18 506 6803	08.22
09 18 506 6803 58U	08.22
09 18 506 6804	08.22
09 18 506 6813	08.22
09 18 506 6813 58U	08.22
09 18 506 6814	08.22
09 18 506 6901	08.06
09 18 506 6902	08.08
09 18 506 6903	08.06
09 18 506 6904	08.08
09 18 506 6906	08.18
09 18 506 6907	08.18
09 18 506 6911	08.06
09 18 506 6912	08.08
09 18 506 6913	08.06
09 18 506 6914	08.08
09 18 506 6916	08.18
09 18 506 6917	08.18
09 18 506 6921	08.06
09 18 506 6922	08.08
09 18 506 6923	08.06
09 18 506 6924	08.08
09 18 506 6926	08.18
09 18 506 6927	08.18
09 18 506 6953	08.12
09 18 506 6963	08.12
09 18 506 6973	08.12
09 18 506 7004	08.10
09 18 506 7014	08.10
09 18 506 7024	08.10
09 18 506 7322	08.15
09 18 506 7323	08.14
09 18 506 7324	08.15
09 18 506 7329	08.35
09 18 506 7803	08.22
09 18 506 7803 58U	08.22
09 18 506 7804	08.22
09 18 506 7813	08.22
09 18 506 7813 58U	08.22
09 18 506 7814	08.22
09 18 506 7901	08.06
09 18 506 7902	08.08
09 18 506 7903	08.06
09 18 506 7904	08.08
09 18 506 7906	08.18
09 18 506 7907	08.18
09 18 506 7911	08.06
09 18 506 7912	08.08
09 18 506 7913	08.06
09 18 506 7914	08.08
09 18 506 7916	08.18
09 18 506 7917	08.18
09 18 506 7921	08.06
09 18 506 7922	08.08
09 18 506 7923	08.06
09 18 506 7924	08.08
09 18 506 7926	08.18
09 18 506 7927	08.18
09 18 506 7953	08.12
09 18 506 7963	08.12
09 18 506 7973	08.12
09 18 506 9002	08.23
09 18 506 9002 58U	08.23
09 18 510 5004	08.10
09 18 510 5014	08.10
09 18 510 5024	08.10
09 18 510 5322	08.15
09 18 510 5323	08.14
09 18 510 5324	08.15
09 18 510 5329	08.35
09 18 510 5803	08.22
09 18 510 5803 58U	08.22
09 18 510 5804	08.22
09 18 510 5813	08.22
09 18 510 5813 58U	08.22
09 18 510 5814	08.22
09 18 510 5901	08.06
09 18 510 5902	08.08
09 18 510 5903	08.06
09 18 510 5904	08.08
09 18 510 5906	08.18
09 18 510 5907	08.18
09 18 510 5911	08.06

List of part numbers

Part number	Page
09 18 510 5912	08.08
09 18 510 5913	08.06
09 18 510 5914	08.08
09 18 510 5916	08.18
09 18 510 5917	08.18
09 18 510 5921	08.06
09 18 510 5922	08.08
09 18 510 5923	08.06
09 18 510 5924	08.08
09 18 510 5926	08.18
09 18 510 5927	08.18
09 18 510 5953	08.12
09 18 510 5963	08.12
09 18 510 5973	08.12
09 18 510 6004	08.10
09 18 510 6014	08.10
09 18 510 6024	08.10
09 18 510 6322	08.15
09 18 510 6323	08.14
09 18 510 6324	08.15
09 18 510 6329	08.35
09 18 510 6803	08.22
09 18 510 6803 58U	08.22
09 18 510 6804	08.22
09 18 510 6813	08.22
09 18 510 6813 58U	08.22
09 18 510 6814	08.22
09 18 510 6901	08.06
09 18 510 6902	08.08
09 18 510 6903	08.06
09 18 510 6904	08.08
09 18 510 6906	08.18
09 18 510 6907	08.18
09 18 510 6911	08.06
09 18 510 6912	08.08
09 18 510 6913	08.06
09 18 510 6914	08.08
09 18 510 6916	08.18
09 18 510 6917	08.18
09 18 510 6921	08.06
09 18 510 6922	08.08
09 18 510 6923	08.06
09 18 510 6924	08.08
09 18 510 6926	08.18
09 18 510 6927	08.18
09 18 510 6953	08.12
09 18 510 6963	08.12
09 18 510 6973	08.12
09 18 510 7004	08.10
09 18 510 7014	08.10
09 18 510 7024	08.10
09 18 510 7322	08.15
09 18 510 7323	08.14
09 18 510 7324	08.15
09 18 510 7329	08.35
09 18 510 7803	08.22
09 18 510 7803 58U	08.22
09 18 510 7804	08.22
09 18 510 7813	08.22
09 18 510 7813 58U	08.22
09 18 510 7814	08.22
09 18 510 7901	08.06
09 18 510 7902	08.08
09 18 510 7903	08.06
09 18 510 7904	08.08
09 18 510 7906	08.18
09 18 510 7907	08.18
09 18 510 7911	08.06
09 18 510 7912	08.08
09 18 510 7913	08.06
09 18 510 7914	08.08
09 18 510 7916	08.18
09 18 510 7917	08.18
09 18 510 7921	08.06
09 18 510 7922	08.08
09 18 510 7923	08.06
09 18 510 7924	08.08
09 18 510 7926	08.18
09 18 510 7927	08.18
09 18 510 7953	08.12
09 18 510 7963	08.12
09 18 510 7973	08.12
09 18 510 9002	08.23
09 18 510 9002 58U	08.23
09 18 514 5004	08.10
09 18 514 5014	08.10
09 18 514 5024	08.10
09 18 514 5322	08.15
09 18 514 5323	08.14
09 18 514 5324	08.15
09 18 514 5329	08.35
09 18 514 5803	08.22
09 18 514 5803 58U	08.22
09 18 514 5804	08.22
09 18 514 5813	08.22
09 18 514 5813 58U	08.22
09 18 514 5814	08.22
09 18 514 5901	08.06
09 18 514 5902	08.08
09 18 514 5903	08.06
09 18 514 5904	08.08
09 18 514 5906	08.18
09 18 514 5907	08.18
09 18 514 5911	08.06
09 18 514 5912	08.08
09 18 514 5913	08.06
09 18 514 5914	08.08
09 18 514 5916	08.18
09 18 514 5917	08.18
09 18 514 5921	08.06
09 18 514 5922	08.08
09 18 514 5923	08.06
09 18 514 5924	08.08
09 18 514 5926	08.18
09 18 514 5927	08.18
09 18 514 5953	08.12
09 18 514 5963	08.12
09 18 514 5973	08.12
09 18 514 6004	08.10
09 18 514 6014	08.10
09 18 514 6024	08.10
09 18 514 6322	08.15
09 18 514 6323	08.14
09 18 514 6324	08.15
09 18 514 6329	08.35
09 18 514 6803	08.22
09 18 514 6803 58U	08.22
09 18 514 6804	08.22
09 18 514 6813	08.22
09 18 514 6813 58U	08.22
09 18 514 6814	08.22
09 18 514 6901	08.06
09 18 514 6902	08.08
09 18 514 6903	08.06
09 18 514 6904	08.08
09 18 514 6906	08.18
09 18 514 6907	08.18
09 18 514 6911	08.06
09 18 514 6912	08.08
09 18 514 6913	08.06
09 18 514 6914	08.08
09 18 514 6916	08.18
09 18 514 6917	08.18
09 18 514 6921	08.06
09 18 514 6922	08.08
09 18 514 6923	08.06
09 18 514 6924	08.08
09 18 514 6926	08.18
09 18 514 6927	08.18
09 18 514 6953	08.12
09 18 514 6963	08.12
09 18 514 6973	08.12
09 18 514 7004	08.10
09 18 514 7014	08.10
09 18 514 7024	08.10
09 18 514 7322	08.15
09 18 514 7323	08.14
09 18 514 7324	08.15
09 18 514 7329	08.35
09 18 514 7803	08.22
09 18 514 7803 58U	08.22
09 18 514 7804	08.22
09 18 514 7813	08.22
09 18 514 7813 58U	08.22
09 18 514 7814	08.22
09 18 514 7901	08.06
09 18 514 7902	08.08
09 18 514 7903	08.06
09 18 514 7904	08.08
09 18 514 7906	08.18
09 18 514 7907	08.18
09 18 514 7911	08.06
09 18 514 7912	08.08
09 18 514 7913	08.06
09 18 514 7914	08.08
09 18 514 7916	08.18
09 18 514 7917	08.18
09 18 514 7921	08.06
09 18 514 7922	08.08
09 18 514 7923	08.06
09 18 514 7924	08.08
09 18 514 7926	08.18
09 18 514 7927	08.18
09 18 514 7953	08.12
09 18 514 7963	08.12
09 18 514 7973	08.12
09 18 514 9002	08.23
09 18 514 9002 58U	08.23
09 18 516 5004	08.10
09 18 516 5014	08.10
09 18 516 5024	08.10
09 18 516 5322	08.15
09 18 516 5323	08.14
09 18 516 5324	08.15
09 18 516 5329	08.35
09 18 516 5803	08.22
09 18 516 5803 58U	08.22
09 18 516 5804	08.22
09 18 516 5813	08.22
09 18 516 5813 58U	08.22
09 18 516 5814	08.22
09 18 516 5901	08.06
09 18 516 5902	08.08
09 18 516 5903	08.06
09 18 516 5904	08.08
09 18 516 5906	08.18
09 18 516 5907	08.18
09 18 516 5911	08.06
09 18 516 5912	08.08
09 18 516 5913	08.06
09 18 516 5914	08.08
09 18 516 5916	08.18
09 18 516 5917	08.18
09 18 516 5921	08.06
09 18 516 5922	08.08
09 18 516 5923	08.06
09 18 516 5924	08.08
09 18 516 5926	08.18
09 18 516 5927	08.18
09 18 516 5953	08.12
09 18 516 5963	08.12
09 18 516 5973	08.12
09 18 516 6004	08.10
09 18 516 6014	08.10
09 18 516 6024	08.10
09 18 516 6322	08.15
09 18 516 6323	08.14
09 18 516 6324	08.15
09 18 516 6329	08.35
09 18 516 6803	08.22
09 18 516 6803 58U	08.22
09 18 516 6804	08.22
09 18 516 6813	08.22
09 18 516 6813 58U	08.22
09 18 516 6814	08.22
09 18 516 6901	08.06
09 18 516 6902	08.08
09 18 516 6903	08.06
09 18 516 6904	08.08
09 18 516 6906	08.18
09 18 516 6907	08.18
09 18 516 6911	08.06
09 18 516 6912	08.08
09 18 516 6913	08.06
09 18 516 6914	08.08
09 18 516 6916	08.18
09 18 516 6917	08.18
09 18 516 6921	08.06
09 18 516 6922	08.08
09 18 516 6923	08.06
09 18 516 6924	08.08
09 18 516 6926	08.18
09 18 516 6927	08.18
09 18 516 6953	08.12
09 18 516 6963	08.12
09 18 516 6973	08.12
09 18 516 7004	08.10
09 18 516 7014	08.10
09 18 516 7024	08.10
09 18 516 7322	08.15
09 18 516 7323	08.14
09 18 516 7324	08.15
09 18 516 7329	08.35
09 18 516 7803	08.22
09 18 516 7803 58U	08.22
09 18 516 7804	08.22
09 18 516 7813	08.22
09 18 516 7813 58U	08.22
09 18 516 7814	08.22
09 18 516 7901	08.06
09 18 516 7902	08.08
09 18 516 7903	08.06
09 18 516 7904	08.08
09 18 516 7906	08.18
09 18 516 7907	08.18
09 18 516 7911	08.06
09 18 516 7912	08.08
09 18 516 7913	08.06
09 18 516 7914	08.08
09 18 516 7916	08.18
09 18 516 7917	08.18
09 18 516 7921	08.06
09 18 516 7922	08.08
09 18 516 7923	08.06
09 18 516 7924	08.08
09 18 516 7926	08.18
09 18 516 7927	08.18
09 18 516 7953	08.12
09 18 516 7963	08.12
09 18 516 7973	08.12
09 18 516 9002	08.23
09 18 516 9002 58U	08.23
09 18 520 5004	08.10
09 18 520 5014	08.10
09 18 520 5024	08.10
09 18 520 5322	08.15
09 18 520 5323	08.14
09 18 520 5324	08.15
09 18 520 5329	08.35
09 18 520 5803	08.22
09 18 520 5803 58U	08.22
09 18 520 5804	08.22
09 18 520 5813	08.22
09 18 520 5813 58U	08.22
09 18 520 5814	08.22
09 18 520 5901	08.06
09 18 520 5902	08.08
09 18 520 5903	08.06
09 18 520 5904	08.08
09 18 520 5906	08.18
09 18 520 5907	08.18
09 18 520 5911	08.06
09 18 520 5912	08.08
09 18 520 5913	08.06
09 18 520 5914	08.08
09 18 520 5916	08.18
09 18 520 5917	08.18
09 18 520 5921	08.06
09 18 520 5922	08.08
09 18 520 5923	08.06
09 18 520 5924	08.08
09 18 520 5926	08.18
09 18 520 5927	08.18
09 18 520 5953	08.12
09 18 520 5963	08.12
09 18 520 5973	08.12
09 18 520 6004	08.10
09 18 520 6014	08.10
09 18 520 6024	08.10
09 18 520 6322	08.15
09 18 520 6323	08.14
09 18 520 6324	08.15

List of part numbers

Part number	Page
09 18 520 6329	08.35
09 18 520 6803	08.22
09 18 520 6803 58U	08.22
09 18 520 6804	08.22
09 18 520 6813	08.22
09 18 520 6813 58U	08.22
09 18 520 6814	08.22
09 18 520 6901	08.06
09 18 520 6902	08.08
09 18 520 6903	08.06
09 18 520 6904	08.08
09 18 520 6906	08.18
09 18 520 6907	08.18
09 18 520 6911	08.06
09 18 520 6912	08.08
09 18 520 6913	08.06
09 18 520 6914	08.08
09 18 520 6916	08.18
09 18 520 6917	08.18
09 18 520 6921	08.06
09 18 520 6922	08.08
09 18 520 6923	08.06
09 18 520 6924	08.08
09 18 520 6926	08.18
09 18 520 6927	08.18
09 18 520 6953	08.12
09 18 520 6963	08.12
09 18 520 6973	08.12
09 18 520 7004	08.10
09 18 520 7014	08.10
09 18 520 7024	08.10
09 18 520 7322	08.15
09 18 520 7323	08.14
09 18 520 7324	08.15
09 18 520 7329	08.35
09 18 520 7803	08.22
09 18 520 7803 58U	08.22
09 18 520 7804	08.22
09 18 520 7813	08.22
09 18 520 7813 58U	08.22
09 18 520 7814	08.22
09 18 520 7901	08.06
09 18 520 7902	08.08
09 18 520 7903	08.06
09 18 520 7904	08.08
09 18 520 7906	08.18
09 18 520 7907	08.18
09 18 520 7911	08.06
09 18 520 7912	08.08
09 18 520 7913	08.06
09 18 520 7914	08.08
09 18 520 7916	08.18
09 18 520 7917	08.18
09 18 520 7921	08.06
09 18 520 7922	08.08
09 18 520 7923	08.06
09 18 520 7924	08.08
09 18 520 7926	08.18
09 18 520 7927	08.18
09 18 520 7953	08.12
09 18 520 7963	08.12
09 18 520 7973	08.12
09 18 520 9002	08.23
09 18 520 9002 58U	08.23
09 18 524 5004	08.10
09 18 524 5014	08.10
09 18 524 5024	08.10
09 18 524 5803	08.22
09 18 524 5813	08.22
09 18 524 5901	08.06
09 18 524 5902	08.08
09 18 524 5903	08.06
09 18 524 5904	08.08
09 18 524 5906	08.18
09 18 524 5907	08.18
09 18 524 5911	08.06
09 18 524 5912	08.08
09 18 524 5913	08.06
09 18 524 5914	08.08
09 18 524 5916	08.18
09 18 524 5917	08.18
09 18 524 5921	08.06
09 18 524 5922	08.08
09 18 524 5923	08.06
09 18 524 5924	08.08
09 18 524 5926	08.18
09 18 524 5927	08.18
09 18 524 5953	08.12
09 18 524 5963	08.12
09 18 524 5973	08.12
09 18 524 6004	08.10
09 18 524 6014	08.10
09 18 524 6024	08.10
09 18 524 6803	08.22
09 18 524 6813	08.22
09 18 524 6901	08.06
09 18 524 6902	08.08
09 18 524 6903	08.06
09 18 524 6904	08.08
09 18 524 6906	08.18
09 18 524 6907	08.18
09 18 524 6911	08.06
09 18 524 6912	08.08
09 18 524 6913	08.06
09 18 524 6914	08.08
09 18 524 6916	08.18
09 18 524 6917	08.18
09 18 524 6921	08.06
09 18 524 6922	08.08
09 18 524 6923	08.06
09 18 524 6924	08.08
09 18 524 6926	08.18
09 18 524 6927	08.18
09 18 524 6953	08.12
09 18 524 6963	08.12
09 18 524 6973	08.12
09 18 524 7004	08.10
09 18 524 7014	08.10
09 18 524 7024	08.10
09 18 524 7803	08.22
09 18 524 7813	08.22
09 18 524 7901	08.06
09 18 524 7902	08.08
09 18 524 7903	08.06
09 18 524 7904	08.08
09 18 524 7906	08.18
09 18 524 7907	08.18
09 18 524 7911	08.06
09 18 524 7912	08.08
09 18 524 7913	08.06
09 18 524 7914	08.08
09 18 524 7916	08.18
09 18 524 7917	08.18
09 18 524 7921	08.06
09 18 524 7922	08.08
09 18 524 7923	08.06
09 18 524 7924	08.08
09 18 524 7926	08.18
09 18 524 7927	08.18
09 18 524 7953	08.12
09 18 524 7963	08.12
09 18 524 7973	08.12
09 18 524 9002	08.23
09 18 526 5004	08.10
09 18 526 5014	08.10
09 18 526 5024	08.10
09 18 526 5322	08.15
09 18 526 5323	08.14
09 18 526 5324	08.15
09 18 526 5329	08.35
09 18 526 5803	08.22
09 18 526 5803 58U	08.22
09 18 526 5804	08.22
09 18 526 5813	08.22
09 18 526 5813 58U	08.22
09 18 526 5814	08.22
09 18 526 5901	08.06
09 18 526 5902	08.08
09 18 526 5903	08.06
09 18 526 5904	08.08
09 18 526 5906	08.18
09 18 526 5907	08.18
09 18 526 5911	08.06
09 18 526 5912	08.08
09 18 526 5913	08.06
09 18 526 5914	08.08
09 18 526 5916	08.18
09 18 526 5917	08.18
09 18 526 5921	08.06
09 18 526 5922	08.08
09 18 526 5923	08.06
09 18 526 5924	08.08
09 18 526 5926	08.18
09 18 526 5927	08.18
09 18 526 5953	08.12
09 18 526 5963	08.12
09 18 526 5973	08.12
09 18 526 6004	08.10
09 18 526 6014	08.10
09 18 526 6024	08.10
09 18 526 6322	08.15
09 18 526 6323	08.14
09 18 526 6324	08.15
09 18 526 6329	08.35
09 18 526 6803	08.22
09 18 526 6803 58U	08.22
09 18 526 6804	08.22
09 18 526 6813	08.22
09 18 526 6813 58U	08.22
09 18 526 6814	08.22
09 18 526 6901	08.06
09 18 526 6902	08.08
09 18 526 6903	08.06
09 18 526 6904	08.08
09 18 526 6906	08.18
09 18 526 6907	08.18
09 18 526 6911	08.06
09 18 526 6912	08.08
09 18 526 6913	08.06
09 18 526 6914	08.08
09 18 526 6916	08.18
09 18 526 6917	08.18
09 18 526 6921	08.06
09 18 526 6922	08.08
09 18 526 6923	08.06
09 18 526 6924	08.08
09 18 526 6926	08.18
09 18 526 6927	08.18
09 18 526 6953	08.12
09 18 526 6963	08.12
09 18 526 6973	08.12
09 18 526 7004	08.10
09 18 526 7014	08.10
09 18 526 7024	08.10
09 18 526 7322	08.15
09 18 526 7323	08.14
09 18 526 7324	08.15
09 18 526 7329	08.35
09 18 526 7803	08.22
09 18 526 7803 58U	08.22
09 18 526 7804	08.22
09 18 526 7813	08.22
09 18 526 7813 58U	08.22
09 18 526 7814	08.22
09 18 526 7901	08.06
09 18 526 7902	08.08
09 18 526 7903	08.06
09 18 526 7904	08.08
09 18 526 7906	08.18
09 18 526 7907	08.18
09 18 526 7911	08.06
09 18 526 7912	08.08
09 18 526 7913	08.06
09 18 526 7914	08.08
09 18 526 7916	08.18
09 18 526 7917	08.18
09 18 526 7921	08.06
09 18 526 7922	08.08
09 18 526 7923	08.06
09 18 526 7924	08.08
09 18 526 7926	08.18
09 18 526 7927	08.18
09 18 526 7953	08.12
09 18 526 7963	08.12
09 18 526 7973	08.12
09 18 526 9002	08.23
09 18 526 9002 58U	08.23
09 18 530 5004	08.10
09 18 530 5014	08.10
09 18 530 5024	08.10
09 18 530 5322	08.15
09 18 530 5323	08.14
09 18 530 5324	08.15
09 18 530 5803	08.22
09 18 530 5803 58U	08.22
09 18 530 5804	08.22
09 18 530 5813	08.22
09 18 530 5813 58U	08.22
09 18 530 5814	08.22
09 18 530 5901	08.06
09 18 530 5902	08.08
09 18 530 5903	08.06
09 18 530 5904	08.08
09 18 530 5906	08.18
09 18 530 5907	08.18
09 18 530 5911	08.06
09 18 530 5912	08.08
09 18 530 5913	08.06
09 18 530 5914	08.08
09 18 530 5916	08.18
09 18 530 5917	08.18
09 18 530 5921	08.06
09 18 530 5922	08.08
09 18 530 5923	08.06
09 18 530 5924	08.08
09 18 530 5926	08.18
09 18 530 5927	08.18
09 18 530 5953	08.12
09 18 530 5963	08.12
09 18 530 5973	08.12
09 18 530 6004	08.10
09 18 530 6014	08.10
09 18 530 6024	08.10
09 18 530 6322	08.15
09 18 530 6323	08.14
09 18 530 6324	08.15
09 18 530 6803	08.22
09 18 530 6803 58U	08.22
09 18 530 6804	08.22
09 18 530 6813	08.22
09 18 530 6813 58U	08.22
09 18 530 6814	08.22
09 18 530 6901	08.06
09 18 530 6902	08.08
09 18 530 6903	08.06
09 18 530 6904	08.08
09 18 530 6906	08.18
09 18 530 6907	08.18
09 18 530 6911	08.06
09 18 530 6912	08.08
09 18 530 6913	08.06
09 18 530 6914	08.08
09 18 530 6916	08.18
09 18 530 6917	08.18
09 18 530 6921	08.06
09 18 530 6922	08.08
09 18 530 6923	08.06
09 18 530 6924	08.08
09 18 530 6926	08.18
09 18 530 6927	08.18
09 18 530 6953	08.12
09 18 530 6963	08.12
09 18 530 6973	08.12
09 18 530 7004	08.10
09 18 530 7014	08.10
09 18 530 7024	08.10
09 18 530 7322	08.15
09 18 530 7323	08.14
09 18 530 7324	08.15
09 18 530 7803	08.22
09 18 530 7803 58U	08.22
09 18 530 7804	08.22
09 18 530 7813	08.22
09 18 530 7813 58U	08.22
09 18 530 7814	08.22
09 18 530 7901	08.06
09 18 530 7902	08.08
09 18 530 7903	08.06
09 18 530 7904	08.08
09 18 530 7906	08.18
09 18 530 7907	08.18
09 18 530 7911	08.06

List of part numbers

Part number	Page
09 18 530 7912	08.08
09 18 530 7913	08.06
09 18 530 7914	08.08
09 18 530 7916	08.18
09 18 530 7917	08.18
09 18 530 7921	08.06
09 18 530 7922	08.08
09 18 530 7923	08.06
09 18 530 7924	08.08
09 18 530 7926	08.18
09 18 530 7927	08.18
09 18 530 7953	08.12
09 18 530 7963	08.12
09 18 530 7973	08.12
09 18 530 9002	08.23
09 18 530 9002 58U	08.23
09 18 534 5004	08.10
09 18 534 5014	08.10
09 18 534 5024	08.10
09 18 534 5322	08.15
09 18 534 5323	08.14
09 18 534 5324	08.15
09 18 534 5329	08.35
09 18 534 5803	08.22
09 18 534 5803 58U	08.22
09 18 534 5804	08.22
09 18 534 5813	08.22
09 18 534 5813 58U	08.22
09 18 534 5814	08.22
09 18 534 5901	08.06
09 18 534 5902	08.08
09 18 534 5903	08.06
09 18 534 5904	08.08
09 18 534 5906	08.18
09 18 534 5907	08.18
09 18 534 5911	08.06
09 18 534 5912	08.08
09 18 534 5913	08.06
09 18 534 5914	08.08
09 18 534 5916	08.18
09 18 534 5917	08.18
09 18 534 5921	08.06
09 18 534 5922	08.08
09 18 534 5923	08.06
09 18 534 5924	08.08
09 18 534 5926	08.18
09 18 534 5927	08.18
09 18 534 5953	08.12
09 18 534 5963	08.12
09 18 534 5973	08.12
09 18 534 6004	08.10
09 18 534 6014	08.10
09 18 534 6024	08.10
09 18 534 6322	08.15
09 18 534 6323	08.14
09 18 534 6324	08.15
09 18 534 6329	08.35
09 18 534 6803	08.22
09 18 534 6803 58U	08.22
09 18 534 6804	08.22
09 18 534 6813	08.22
09 18 534 6813 58U	08.22
09 18 534 6814	08.22
09 18 534 6901	08.06
09 18 534 6902	08.08
09 18 534 6903	08.06
09 18 534 6904	08.08
09 18 534 6906	08.18
09 18 534 6907	08.18
09 18 534 6911	08.06
09 18 534 6912	08.08
09 18 534 6913	08.06
09 18 534 6914	08.08
09 18 534 6916	08.18
09 18 534 6917	08.18
09 18 534 6921	08.06
09 18 534 6922	08.08
09 18 534 6923	08.06
09 18 534 6924	08.08
09 18 534 6926	08.18
09 18 534 6927	08.18
09 18 534 6953	08.12
09 18 534 6963	08.12
09 18 534 6973	08.12
09 18 534 7004	08.10
09 18 534 7014	08.10
09 18 534 7024	08.10
09 18 534 7322	08.15
09 18 534 7323	08.14
09 18 534 7324	08.15
09 18 534 7329	08.35
09 18 534 7803	08.22
09 18 534 7803 58U	08.22
09 18 534 7804	08.22
09 18 534 7813	08.22
09 18 534 7813 58U	08.22
09 18 534 7814	08.22
09 18 534 7901	08.06
09 18 534 7902	08.08
09 18 534 7903	08.06
09 18 534 7904	08.08
09 18 534 7906	08.18
09 18 534 7907	08.18
09 18 534 7911	08.06
09 18 534 7912	08.08
09 18 534 7913	08.06
09 18 534 7914	08.08
09 18 534 7916	08.18
09 18 534 7917	08.18
09 18 534 7921	08.06
09 18 534 7922	08.08
09 18 534 7923	08.06
09 18 534 7924	08.08
09 18 534 7926	08.18
09 18 534 7927	08.18
09 18 534 7953	08.12
09 18 534 7963	08.12
09 18 534 7973	08.12
09 18 534 9002	08.23
09 18 534 9002 58U	08.23
09 18 540 5004	08.10
09 18 540 5014	08.10
09 18 540 5024	08.10
09 18 540 5322	08.15
09 18 540 5323	08.14
09 18 540 5324	08.15
09 18 540 5329	08.35
09 18 540 5803	08.22
09 18 540 5803 58U	08.22
09 18 540 5804	08.22
09 18 540 5813	08.22
09 18 540 5813 58U	08.22
09 18 540 5814	08.22
09 18 540 5901	08.06
09 18 540 5902	08.08
09 18 540 5903	08.06
09 18 540 5904	08.08
09 18 540 5906	08.18
09 18 540 5907	08.18
09 18 540 5911	08.06
09 18 540 5912	08.08
09 18 540 5913	08.06
09 18 540 5914	08.08
09 18 540 5916	08.18
09 18 540 5917	08.18
09 18 540 5921	08.06
09 18 540 5922	08.08
09 18 540 5923	08.06
09 18 540 5924	08.08
09 18 540 5926	08.18
09 18 540 5927	08.18
09 18 540 5953	08.12
09 18 540 5963	08.12
09 18 540 5973	08.12
09 18 540 6004	08.10
09 18 540 6014	08.10
09 18 540 6024	08.10
09 18 540 6322	08.15
09 18 540 6323	08.14
09 18 540 6324	08.15
09 18 540 6329	08.35
09 18 540 6803	08.22
09 18 540 6803 58U	08.22
09 18 540 6804	08.22
09 18 540 6813	08.22
09 18 540 6813 58U	08.22
09 18 540 6814	08.22
09 18 540 6901	08.06
09 18 540 6902	08.08
09 18 540 6903	08.06
09 18 540 6904	08.08
09 18 540 6906	08.18
09 18 540 6907	08.18
09 18 540 6911	08.06
09 18 540 6912	08.08
09 18 540 6913	08.06
09 18 540 6914	08.08
09 18 540 6916	08.18
09 18 540 6917	08.18
09 18 540 6921	08.06
09 18 540 6922	08.08
09 18 540 6923	08.06
09 18 540 6924	08.08
09 18 540 6926	08.18
09 18 540 6927	08.18
09 18 540 6953	08.12
09 18 540 6963	08.12
09 18 540 6973	08.12
09 18 540 7004	08.10
09 18 540 7014	08.10
09 18 540 7024	08.10
09 18 540 7322	08.15
09 18 540 7323	08.14
09 18 540 7324	08.15
09 18 540 7329	08.35
09 18 540 7803	08.22
09 18 540 7803 58U	08.22
09 18 540 7804	08.22
09 18 540 7813	08.22
09 18 540 7813 58U	08.22
09 18 540 7814	08.22
09 18 540 7901	08.06
09 18 540 7902	08.08
09 18 540 7903	08.06
09 18 540 7904	08.08
09 18 540 7906	08.18
09 18 540 7907	08.18
09 18 540 7911	08.06
09 18 540 7912	08.08
09 18 540 7913	08.06
09 18 540 7914	08.08
09 18 540 7916	08.18
09 18 540 7917	08.18
09 18 540 7921	08.06
09 18 540 7922	08.08
09 18 540 7923	08.06
09 18 540 7924	08.08
09 18 540 7926	08.18
09 18 540 7927	08.18
09 18 540 7953	08.12
09 18 540 7963	08.12
09 18 540 7973	08.12
09 18 540 9002	08.23
09 18 540 9002 58U	08.23
09 18 550 5004	08.10
09 18 550 5014	08.10
09 18 550 5024	08.10
09 18 550 5322	08.15
09 18 550 5323	08.14
09 18 550 5324	08.15
09 18 550 5329	08.35
09 18 550 5803	08.22
09 18 550 5804	08.22
09 18 550 5813	08.22
09 18 550 5814	08.22
09 18 550 5901	08.06
09 18 550 5902	08.08
09 18 550 5903	08.06
09 18 550 5904	08.08
09 18 550 5906	08.18
09 18 550 5907	08.18
09 18 550 5911	08.06
09 18 550 5912	08.08
09 18 550 5913	08.06
09 18 550 5914	08.08
09 18 550 5916	08.18
09 18 550 5917	08.18
09 18 550 5921	08.06
09 18 550 5922	08.08
09 18 550 5923	08.06
09 18 550 5924	08.08
09 18 550 5926	08.18
09 18 550 5927	08.18
09 18 550 5953	08.12
09 18 550 5963	08.12
09 18 550 5973	08.12
09 18 550 6004	08.10
09 18 550 6014	08.10
09 18 550 6024	08.10
09 18 550 6322	08.15
09 18 550 6323	08.14
09 18 550 6324	08.15
09 18 550 6329	08.35
09 18 550 6803	08.22
09 18 550 6804	08.22
09 18 550 6813	08.22
09 18 550 6814	08.22
09 18 550 6901	08.06
09 18 550 6902	08.08
09 18 550 6903	08.06
09 18 550 6904	08.08
09 18 550 6906	08.18
09 18 550 6907	08.18
09 18 550 6911	08.06
09 18 550 6912	08.08
09 18 550 6913	08.06
09 18 550 6914	08.08
09 18 550 6916	08.18
09 18 550 6917	08.18
09 18 550 6921	08.06
09 18 550 6922	08.08
09 18 550 6923	08.06
09 18 550 6924	08.08
09 18 550 6926	08.18
09 18 550 6927	08.18
09 18 550 6953	08.12
09 18 550 6963	08.12
09 18 550 6973	08.12
09 18 550 7004	08.10
09 18 550 7014	08.10
09 18 550 7024	08.10
09 18 550 7322	08.15
09 18 550 7323	08.14
09 18 550 7324	08.15
09 18 550 7329	08.35
09 18 550 7803	08.22
09 18 550 7804	08.22
09 18 550 7813	08.22
09 18 550 7814	08.22
09 18 550 7901	08.06
09 18 550 7902	08.08
09 18 550 7903	08.06
09 18 550 7904	08.08
09 18 550 7906	08.18
09 18 550 7907	08.18
09 18 550 7911	08.06
09 18 550 7912	08.08
09 18 550 7913	08.06
09 18 550 7914	08.08
09 18 550 7916	08.18
09 18 550 7917	08.18
09 18 550 7921	08.06
09 18 550 7922	08.08
09 18 550 7923	08.06
09 18 550 7924	08.08
09 18 550 7926	08.18
09 18 550 7927	08.18
09 18 550 7953	08.12
09 18 550 7963	08.12
09 18 550 7973	08.12
09 18 550 9002	08.23
09 18 560 5004	08.10
09 18 560 5014	08.10
09 18 560 5024	08.10
09 18 560 5322	08.15
09 18 560 5323	08.14
09 18 560 5324	08.15
09 18 560 5329	08.35
09 18 560 5803	08.22
09 18 560 5804	08.22
09 18 560 5813	08.22

List of part numbers

Part number	Page
09 18 560 5814	08.22
09 18 560 5901	08.06
09 18 560 5902	08.08
09 18 560 5903	08.06
09 18 560 5904	08.08
09 18 560 5906	08.18
09 18 560 5907	08.18
09 18 560 5911	08.06
09 18 560 5912	08.08
09 18 560 5913	08.06
09 18 560 5914	08.08
09 18 560 5916	08.18
09 18 560 5917	08.18
09 18 560 5921	08.06
09 18 560 5922	08.08
09 18 560 5923	08.06
09 18 560 5924	08.08
09 18 560 5926	08.18
09 18 560 5927	08.18
09 18 560 5953	08.12
09 18 560 5963	08.12
09 18 560 5973	08.12
09 18 560 6004	08.10
09 18 560 6014	08.10
09 18 560 6024	08.10
09 18 560 6322	08.15
09 18 560 6323	08.14
09 18 560 6324	08.15
09 18 560 6329	08.35
09 18 560 6803	08.22
09 18 560 6804	08.22
09 18 560 6813	08.22
09 18 560 6814	08.22
09 18 560 6901	08.06
09 18 560 6902	08.08
09 18 560 6903	08.06
09 18 560 6904	08.08
09 18 560 6906	08.18
09 18 560 6907	08.18
09 18 560 6911	08.06
09 18 560 6912	08.08
09 18 560 6913	08.06
09 18 560 6914	08.08
09 18 560 6916	08.18
09 18 560 6917	08.18
09 18 560 6921	08.06
09 18 560 6922	08.08
09 18 560 6923	08.06
09 18 560 6924	08.08
09 18 560 6926	08.18
09 18 560 6927	08.18
09 18 560 6953	08.12
09 18 560 6963	08.12
09 18 560 6973	08.12
09 18 560 7004	08.10
09 18 560 7014	08.10
09 18 560 7024	08.10
09 18 560 7322	08.15
09 18 560 7323	08.14
09 18 560 7324	08.15
09 18 560 7329	08.35
09 18 560 7803	08.22
09 18 560 7804	08.22
09 18 560 7813	08.22
09 18 560 7814	08.22
09 18 560 7901	08.06
09 18 560 7902	08.08
09 18 560 7903	08.06
09 18 560 7904	08.08
09 18 560 7906	08.18
09 18 560 7907	08.18
09 18 560 7911	08.06
09 18 560 7912	08.08
09 18 560 7913	08.06
09 18 560 7914	08.08
09 18 560 7916	08.18
09 18 560 7917	08.18
09 18 560 7921	08.06
09 18 560 7922	08.08
09 18 560 7923	08.06
09 18 560 7924	08.08
09 18 560 7926	08.18
09 18 560 7927	08.18
09 18 560 7953	08.12
09 18 560 7963	08.12
09 18 560 7973	08.12
09 18 560 9002	08.23
09 18 564 5004	08.10
09 18 564 5014	08.10
09 18 564 5024	08.10
09 18 564 5322	08.15
09 18 564 5323	08.14
09 18 564 5324	08.15
09 18 564 5329	08.35
09 18 564 5803	08.22
09 18 564 5804	08.22
09 18 564 5813	08.22
09 18 564 5814	08.22
09 18 564 5901	08.06
09 18 564 5902	08.08
09 18 564 5903	08.06
09 18 564 5904	08.08
09 18 564 5906	08.18
09 18 564 5907	08.18
09 18 564 5911	08.06
09 18 564 5912	08.08
09 18 564 5913	08.06
09 18 564 5914	08.08
09 18 564 5916	08.18
09 18 564 5917	08.18
09 18 564 5921	08.06
09 18 564 5922	08.08
09 18 564 5923	08.06
09 18 564 5924	08.08
09 18 564 5926	08.18
09 18 564 5927	08.18
09 18 564 5953	08.12
09 18 564 5963	08.12
09 18 564 5973	08.12
09 18 564 6004	08.10
09 18 564 6014	08.10
09 18 564 6024	08.10
09 18 564 6322	08.15
09 18 564 6323	08.14
09 18 564 6324	08.15
09 18 564 6329	08.35
09 18 564 6803	08.22
09 18 564 6804	08.22
09 18 564 6813	08.22
09 18 564 6814	08.22
09 18 564 6901	08.06
09 18 564 6902	08.08
09 18 564 6903	08.06
09 18 564 6904	08.08
09 18 564 6906	08.18
09 18 564 6907	08.18
09 18 564 6911	08.06
09 18 564 6912	08.08
09 18 564 6913	08.06
09 18 564 6914	08.08
09 18 564 6916	08.18
09 18 564 6917	08.18
09 18 564 6921	08.06
09 18 564 6922	08.08
09 18 564 6923	08.06
09 18 564 6924	08.08
09 18 564 6926	08.18
09 18 564 6927	08.18
09 18 564 6953	08.12
09 18 564 6963	08.12
09 18 564 6973	08.12
09 18 564 7004	08.10
09 18 564 7014	08.10
09 18 564 7024	08.10
09 18 564 7322	08.15
09 18 564 7323	08.14
09 18 564 7324	08.15
09 18 564 7329	08.35
09 18 564 7803	08.22
09 18 564 7804	08.22
09 18 564 7813	08.22
09 18 564 7814	08.22
09 18 564 7901	08.06
09 18 564 7902	08.08
09 18 564 7903	08.06
09 18 564 7904	08.08
09 18 564 7906	08.18
09 18 564 7907	08.18
09 18 564 7911	08.06
09 18 564 7912	08.08
09 18 564 7913	08.06
09 18 564 7914	08.08
09 18 564 7916	08.18
09 18 564 7917	08.18
09 18 564 7921	08.06
09 18 564 7922	08.08
09 18 564 7923	08.06
09 18 564 7924	08.08
09 18 564 7926	08.18
09 18 564 7927	08.18
09 18 564 7953	08.12
09 18 564 7963	08.12
09 18 564 7973	08.12
09 18 564 9002	08.23
09 19 000 9903	08.48
09 19 000 9904	08.48
09 19 010 9643	08.29
09 19 016 9643	08.29
09 19 020 9643	08.29
09 19 026 9643	08.29
09 19 034 9643	08.29
09 19 040 9643	08.29
09 19 050 9643	08.29
09 19 506 5004	08.42
09 19 506 5014	08.42
09 19 506 5024	08.42
09 19 506 5323	08.46
09 19 506 5323 740	08.46
09 19 506 5323 741	08.46
09 19 506 5324	08.47
09 19 506 5324 740	08.47
09 19 506 5324 741	08.47
09 19 506 5903	08.38
09 19 506 5904	08.40
09 19 506 5913	08.38
09 19 506 5914	08.40
09 19 506 5923	08.38
09 19 506 5924	08.40
09 19 506 5953	08.44
09 19 506 5963	08.44
09 19 506 5973	08.44
09 19 506 6004	08.42
09 19 506 6014	08.42
09 19 506 6024	08.42
09 19 506 6323	08.46
09 19 506 6323 740	08.46
09 19 506 6323 741	08.46
09 19 506 6324	08.47
09 19 506 6324 740	08.47
09 19 506 6324 741	08.47
09 19 506 6903	08.38
09 19 506 6904	08.40
09 19 506 6913	08.38
09 19 506 6914	08.40
09 19 506 6923	08.38
09 19 506 6924	08.40
09 19 506 6953	08.44
09 19 506 6963	08.44
09 19 506 6973	08.44
09 19 506 7004	08.42
09 19 506 7014	08.42
09 19 506 7024	08.42
09 19 506 7323	08.46
09 19 506 7323 740	08.46
09 19 506 7323 741	08.46
09 19 506 7324	08.47
09 19 506 7324 740	08.47
09 19 506 7324 741	08.47
09 19 506 7903	08.38
09 19 506 7904	08.40
09 19 506 7913	08.38
09 19 506 7914	08.40
09 19 506 7923	08.38
09 19 506 7924	08.40
09 19 506 7953	08.44
09 19 506 7963	08.44
09 19 506 7973	08.44
09 19 510 5004	08.42
09 19 510 5014	08.42
09 19 510 5024	08.42
09 19 510 5323	08.46
09 19 510 5323 740	08.46
09 19 510 5323 741	08.46
09 19 510 5324	08.47
09 19 510 5324 740	08.47
09 19 510 5324 741	08.47
09 19 510 5903	08.38
09 19 510 5904	08.40
09 19 510 5913	08.38
09 19 510 5914	08.40
09 19 510 5923	08.38
09 19 510 5924	08.40
09 19 510 5953	08.44
09 19 510 5963	08.44
09 19 510 5973	08.44
09 19 510 6004	08.42
09 19 510 6014	08.42
09 19 510 6024	08.42
09 19 510 6323	08.46
09 19 510 6323 740	08.46
09 19 510 6323 741	08.46
09 19 510 6324	08.47
09 19 510 6324 740	08.47
09 19 510 6324 741	08.47
09 19 510 6903	08.38
09 19 510 6904	08.40
09 19 510 6913	08.38
09 19 510 6914	08.40
09 19 510 6923	08.38
09 19 510 6924	08.40
09 19 510 6953	08.44
09 19 510 6963	08.44
09 19 510 6973	08.44
09 19 510 7004	08.42
09 19 510 7014	08.42
09 19 510 7024	08.42
09 19 510 7323	08.46
09 19 510 7323 740	08.46
09 19 510 7323 741	08.46
09 19 510 7324	08.47
09 19 510 7324 740	08.47
09 19 510 7324 741	08.47
09 19 510 7903	08.38
09 19 510 7904	08.40
09 19 510 7913	08.38
09 19 510 7914	08.40
09 19 510 7923	08.38
09 19 510 7924	08.40
09 19 510 7953	08.44
09 19 510 7963	08.44
09 19 510 7973	08.44
09 19 514 5004	08.42
09 19 514 5014	08.42
09 19 514 5024	08.42
09 19 514 5323	08.46
09 19 514 5323 740	08.46
09 19 514 5323 741	08.46
09 19 514 5324	08.47
09 19 514 5324 740	08.47
09 19 514 5324 741	08.47
09 19 514 5903	08.38
09 19 514 5904	08.40
09 19 514 5913	08.38
09 19 514 5914	08.40
09 19 514 5923	08.38
09 19 514 5924	08.40
09 19 514 5953	08.44

List of part numbers

Part number	Page
09 19 514 5963	08.44
09 19 514 5973	08.44
09 19 514 6004	08.42
09 19 514 6014	08.42
09 19 514 6024	08.42
09 19 514 6323	08.46
09 19 514 6323 740	08.46
09 19 514 6323 741	08.46
09 19 514 6324	08.47
09 19 514 6324 740	08.47
09 19 514 6324 741	08.47
09 19 514 6903	08.38
09 19 514 6904	08.40
09 19 514 6913	08.38
09 19 514 6914	08.40
09 19 514 6923	08.38
09 19 514 6924	08.40
09 19 514 6953	08.44
09 19 514 6963	08.44
09 19 514 6973	08.44
09 19 514 7004	08.42
09 19 514 7014	08.42
09 19 514 7024	08.42
09 19 514 7323	08.46
09 19 514 7323 740	08.46
09 19 514 7323 741	08.46
09 19 514 7324	08.47
09 19 514 7324 740	08.47
09 19 514 7324 741	08.47
09 19 514 7903	08.38
09 19 514 7904	08.40
09 19 514 7913	08.38
09 19 514 7914	08.40
09 19 514 7923	08.38
09 19 514 7924	08.40
09 19 514 7953	08.44
09 19 514 7963	08.44
09 19 514 7973	08.44
09 19 516 5004	08.42
09 19 516 5014	08.42
09 19 516 5024	08.42
09 19 516 5323	08.46
09 19 516 5323 740	08.46
09 19 516 5323 741	08.46
09 19 516 5324	08.47
09 19 516 5324 740	08.47
09 19 516 5324 741	08.47
09 19 516 5903	08.38
09 19 516 5904	08.40
09 19 516 5913	08.38
09 19 516 5914	08.40
09 19 516 5923	08.38
09 19 516 5924	08.40
09 19 516 5953	08.44
09 19 516 5963	08.44
09 19 516 5973	08.44
09 19 516 6004	08.42
09 19 516 6014	08.42
09 19 516 6024	08.42
09 19 516 6323	08.46
09 19 516 6323 740	08.46
09 19 516 6323 741	08.46
09 19 516 6324	08.47
09 19 516 6324 740	08.47
09 19 516 6324 741	08.47
09 19 516 6903	08.38
09 19 516 6904	08.40
09 19 516 6913	08.38
09 19 516 6914	08.40
09 19 516 6923	08.38
09 19 516 6924	08.40
09 19 516 6953	08.44
09 19 516 6963	08.44
09 19 516 6973	08.44
09 19 516 7004	08.42
09 19 516 7014	08.42
09 19 516 7024	08.42
09 19 516 7323	08.46
09 19 516 7323 740	08.46
09 19 516 7323 741	08.46
09 19 516 7324	08.47
09 19 516 7324 740	08.47
09 19 516 7324 741	08.47
09 19 516 7903	08.38
09 19 516 7904	08.40
09 19 516 7913	08.38
09 19 516 7914	08.40
09 19 516 7923	08.38
09 19 516 7924	08.40
09 19 516 7953	08.44
09 19 516 7963	08.44
09 19 516 7973	08.44
09 19 520 5004	08.42
09 19 520 5014	08.42
09 19 520 5024	08.42
09 19 520 5323	08.46
09 19 520 5323 740	08.46
09 19 520 5323 741	08.46
09 19 520 5324	08.47
09 19 520 5324 740	08.47
09 19 520 5324 741	08.47
09 19 520 5903	08.38
09 19 520 5904	08.40
09 19 520 5913	08.38
09 19 520 5914	08.40
09 19 520 5923	08.38
09 19 520 5924	08.40
09 19 520 5953	08.44
09 19 520 5963	08.44
09 19 520 5973	08.44
09 19 520 6004	08.42
09 19 520 6014	08.42
09 19 520 6024	08.42
09 19 520 6323	08.46
09 19 520 6323 740	08.46
09 19 520 6323 741	08.46
09 19 520 6324	08.47
09 19 520 6324 740	08.47
09 19 520 6324 741	08.47
09 19 520 6903	08.38
09 19 520 6904	08.40
09 19 520 6913	08.38
09 19 520 6914	08.40
09 19 520 6923	08.38
09 19 520 6924	08.40
09 19 520 6953	08.44
09 19 520 6963	08.44
09 19 520 6973	08.44
09 19 520 7004	08.42
09 19 520 7014	08.42
09 19 520 7024	08.42
09 19 520 7323	08.46
09 19 520 7323 740	08.46
09 19 520 7323 741	08.46
09 19 520 7324	08.47
09 19 520 7324 740	08.47
09 19 520 7324 741	08.47
09 19 520 7903	08.38
09 19 520 7904	08.40
09 19 520 7913	08.38
09 19 520 7914	08.40
09 19 520 7923	08.38
09 19 520 7924	08.40
09 19 520 7953	08.44
09 19 520 7963	08.44
09 19 520 7973	08.44
09 19 524 5004	08.42
09 19 524 5014	08.42
09 19 524 5024	08.42
09 19 524 5903	08.38
09 19 524 5904	08.40
09 19 524 5913	08.38
09 19 524 5914	08.40
09 19 524 5923	08.38
09 19 524 5924	08.40
09 19 524 5953	08.44
09 19 524 5963	08.44
09 19 524 5973	08.44
09 19 524 6004	08.42
09 19 524 6014	08.42
09 19 524 6024	08.42
09 19 524 6903	08.38
09 19 524 6904	08.40
09 19 524 6913	08.38
09 19 524 6914	08.40
09 19 524 6923	08.38
09 19 524 6924	08.40
09 19 524 6953	08.44
09 19 524 6963	08.44
09 19 524 6973	08.44
09 19 524 7004	08.42
09 19 524 7014	08.42
09 19 524 7024	08.42
09 19 524 7903	08.38
09 19 524 7904	08.40
09 19 524 7913	08.38
09 19 524 7914	08.40
09 19 524 7923	08.38
09 19 524 7924	08.40
09 19 524 7953	08.44
09 19 524 7963	08.44
09 19 524 7973	08.44
09 19 526 5004	08.42
09 19 526 5014	08.42
09 19 526 5024	08.42
09 19 526 5323	08.46
09 19 526 5323 740	08.46
09 19 526 5323 741	08.46
09 19 526 5324	08.47
09 19 526 5324 740	08.47
09 19 526 5324 741	08.47
09 19 526 5903	08.38
09 19 526 5904	08.40
09 19 526 5913	08.38
09 19 526 5914	08.40
09 19 526 5923	08.38
09 19 526 5924	08.40
09 19 526 5953	08.44
09 19 526 5963	08.44
09 19 526 5973	08.44
09 19 526 6004	08.42
09 19 526 6014	08.42
09 19 526 6024	08.42
09 19 526 6323	08.46
09 19 526 6323 740	08.46
09 19 526 6323 741	08.46
09 19 526 6324	08.47
09 19 526 6324 740	08.47
09 19 526 6324 741	08.47
09 19 526 6903	08.38
09 19 526 6904	08.40
09 19 526 6913	08.38
09 19 526 6914	08.40
09 19 526 6923	08.38
09 19 526 6924	08.40
09 19 526 6953	08.44
09 19 526 6963	08.44
09 19 526 6973	08.44
09 19 526 7004	08.42
09 19 526 7014	08.42
09 19 526 7024	08.42
09 19 526 7323	08.46
09 19 526 7323 740	08.46
09 19 526 7323 741	08.46
09 19 526 7324	08.47
09 19 526 7324 740	08.47
09 19 526 7324 741	08.47
09 19 526 7903	08.38
09 19 526 7904	08.40
09 19 526 7913	08.38
09 19 526 7914	08.40
09 19 526 7923	08.38
09 19 526 7924	08.40
09 19 526 7953	08.44
09 19 526 7963	08.44
09 19 526 7973	08.44
09 19 530 5004	08.42
09 19 530 5014	08.42
09 19 530 5024	08.42
09 19 530 5323	08.46
09 19 530 5323 740	08.46
09 19 530 5323 741	08.46
09 19 530 5324	08.47
09 19 530 5324 740	08.47
09 19 530 5324 741	08.47
09 19 530 5903	08.38
09 19 530 5904	08.40
09 19 530 5913	08.38
09 19 530 5914	08.40
09 19 530 5923	08.38
09 19 530 5924	08.40
09 19 530 5953	08.44
09 19 530 5963	08.44
09 19 530 5973	08.44
09 19 530 6004	08.42
09 19 530 6014	08.42
09 19 530 6024	08.42
09 19 530 6323	08.46
09 19 530 6323 740	08.46
09 19 530 6323 741	08.46
09 19 530 6324	08.47
09 19 530 6324 740	08.47
09 19 530 6324 741	08.47
09 19 530 6903	08.38
09 19 530 6904	08.40
09 19 530 6913	08.38
09 19 530 6914	08.40
09 19 530 6923	08.38
09 19 530 6924	08.40
09 19 530 6953	08.44
09 19 530 6963	08.44
09 19 530 6973	08.44
09 19 530 7004	08.42
09 19 530 7014	08.42
09 19 530 7024	08.42
09 19 530 7323	08.46
09 19 530 7323 740	08.46
09 19 530 7323 741	08.46
09 19 530 7324	08.47
09 19 530 7324 740	08.47
09 19 530 7324 741	08.47
09 19 530 7903	08.38
09 19 530 7904	08.40
09 19 530 7913	08.38
09 19 530 7914	08.40
09 19 530 7923	08.38
09 19 530 7924	08.40
09 19 530 7953	08.44
09 19 530 7963	08.44
09 19 530 7973	08.44
09 19 534 5004	08.42
09 19 534 5014	08.42
09 19 534 5024	08.42
09 19 534 5323	08.46
09 19 534 5323 740	08.46
09 19 534 5323 741	08.46
09 19 534 5324	08.47
09 19 534 5324 740	08.47
09 19 534 5324 741	08.47
09 19 534 5903	08.38
09 19 534 5904	08.40
09 19 534 5913	08.38
09 19 534 5914	08.40
09 19 534 5923	08.38
09 19 534 5924	08.40
09 19 534 5953	08.44
09 19 534 5963	08.44
09 19 534 5973	08.44
09 19 534 6004	08.42
09 19 534 6014	08.42
09 19 534 6024	08.42
09 19 534 6323	08.46
09 19 534 6323 740	08.46
09 19 534 6323 741	08.46
09 19 534 6324	08.47
09 19 534 6324 740	08.47
09 19 534 6324 741	08.47
09 19 534 6903	08.38
09 19 534 6904	08.40
09 19 534 6913	08.38
09 19 534 6914	08.40
09 19 534 6923	08.38
09 19 534 6924	08.40
09 19 534 6953	08.44
09 19 534 6963	08.44
09 19 534 6973	08.44
09 19 534 7004	08.42
09 19 534 7014	08.42

List of part numbers

Part number	Page
09 19 534 7024	08.42
09 19 534 7323	08.46
09 19 534 7323 740	08.46
09 19 534 7323 741	08.46
09 19 534 7324	08.47
09 19 534 7324 740	08.47
09 19 534 7324 741	08.47
09 19 534 7903	08.38
09 19 534 7904	08.40
09 19 534 7913	08.38
09 19 534 7914	08.40
09 19 534 7923	08.38
09 19 534 7924	08.40
09 19 534 7953	08.44
09 19 534 7963	08.44
09 19 534 7973	08.44
09 19 540 5004	08.42
09 19 540 5014	08.42
09 19 540 5024	08.42
09 19 540 5323	08.46
09 19 540 5323 740	08.46
09 19 540 5323 741	08.46
09 19 540 5324	08.47
09 19 540 5324 740	08.47
09 19 540 5324 741	08.47
09 19 540 5903	08.38
09 19 540 5904	08.40
09 19 540 5913	08.38
09 19 540 5914	08.40
09 19 540 5923	08.38
09 19 540 5924	08.40
09 19 540 5953	08.44
09 19 540 5963	08.44
09 19 540 5973	08.44
09 19 540 6004	08.42
09 19 540 6014	08.42
09 19 540 6024	08.42
09 19 540 6323	08.46
09 19 540 6323 740	08.46
09 19 540 6323 741	08.46
09 19 540 6324	08.47
09 19 540 6324 740	08.47
09 19 540 6324 741	08.47
09 19 540 6903	08.38
09 19 540 6904	08.40
09 19 540 6913	08.38
09 19 540 6914	08.40
09 19 540 6923	08.38
09 19 540 6924	08.40
09 19 540 6953	08.44
09 19 540 6963	08.44
09 19 540 6973	08.44
09 19 540 7004	08.42
09 19 540 7014	08.42
09 19 540 7024	08.42
09 19 540 7323	08.46
09 19 540 7323 740	08.46
09 19 540 7323 741	08.46
09 19 540 7324	08.47
09 19 540 7324 740	08.47
09 19 540 7324 741	08.47
09 19 540 7903	08.38
09 19 540 7904	08.40
09 19 540 7913	08.38
09 19 540 7914	08.40
09 19 540 7923	08.38
09 19 540 7924	08.40
09 19 540 7953	08.44
09 19 540 7963	08.44
09 19 540 7973	08.44
09 19 550 5004	08.42
09 19 550 5014	08.42
09 19 550 5024	08.42
09 19 550 5323	08.46
09 19 550 5324	08.47
09 19 550 5903	08.38
09 19 550 5904	08.40
09 19 550 5913	08.38
09 19 550 5914	08.40
09 19 550 5923	08.38
09 19 550 5924	08.40
09 19 550 5953	08.44
09 19 550 5963	08.44
09 19 550 5973	08.44
09 19 550 6004	08.42
09 19 550 6014	08.42
09 19 550 6024	08.42
09 19 550 6323	08.46
09 19 550 6324	08.47
09 19 550 6903	08.38
09 19 550 6904	08.40
09 19 550 6913	08.38
09 19 550 6914	08.40
09 19 550 6923	08.38
09 19 550 6924	08.40
09 19 550 6953	08.44
09 19 550 6963	08.44
09 19 550 6973	08.44
09 19 550 7004	08.42
09 19 550 7014	08.42
09 19 550 7024	08.42
09 19 550 7323	08.46
09 19 550 7324	08.47
09 19 550 7903	08.38
09 19 550 7904	08.40
09 19 550 7913	08.38
09 19 550 7914	08.40
09 19 550 7923	08.38
09 19 550 7924	08.40
09 19 550 7953	08.44
09 19 550 7963	08.44
09 19 550 7973	08.44
09 19 560 5004	08.42
09 19 560 5014	08.42
09 19 560 5024	08.42
09 19 560 5323	08.46
09 19 560 5324	08.47
09 19 560 5903	08.38
09 19 560 5904	08.40
09 19 560 5913	08.38
09 19 560 5914	08.40
09 19 560 5923	08.38
09 19 560 5924	08.40
09 19 560 5953	08.44
09 19 560 5963	08.44
09 19 560 5973	08.44
09 19 560 6004	08.42
09 19 560 6014	08.42
09 19 560 6024	08.42
09 19 560 6323	08.46
09 19 560 6324	08.47
09 19 560 6903	08.38
09 19 560 6904	08.40
09 19 560 6913	08.38
09 19 560 6914	08.40
09 19 560 6923	08.38
09 19 560 6924	08.40
09 19 560 6953	08.44
09 19 560 6963	08.44
09 19 560 6973	08.44
09 19 560 7004	08.42
09 19 560 7014	08.42
09 19 560 7024	08.42
09 19 560 7323	08.46
09 19 560 7324	08.47
09 19 560 7903	08.38
09 19 560 7904	08.40
09 19 560 7913	08.38
09 19 560 7914	08.40
09 19 560 7923	08.38
09 19 560 7924	08.40
09 19 560 7953	08.44
09 19 560 7963	08.44
09 19 560 7973	08.44
09 19 564 5004	08.42
09 19 564 5014	08.42
09 19 564 5024	08.42
09 19 564 5323	08.46
09 19 564 5324	08.47
09 19 564 5903	08.38
09 19 564 5904	08.40
09 19 564 5913	08.38
09 19 564 5914	08.40
09 19 564 5923	08.38
09 19 564 5924	08.40
09 19 564 5953	08.44
09 19 564 5963	08.44
09 19 564 5973	08.44
09 19 564 6004	08.42
09 19 564 6014	08.42
09 19 564 6024	08.42
09 19 564 6323	08.46
09 19 564 6324	08.47
09 19 564 6903	08.38
09 19 564 6904	08.40
09 19 564 6913	08.38
09 19 564 6914	08.40
09 19 564 6923	08.38
09 19 564 6924	08.40
09 19 564 6953	08.44
09 19 564 6963	08.44
09 19 564 6973	08.44
09 19 564 7004	08.42
09 19 564 7014	08.42
09 19 564 7024	08.42
09 19 564 7323	08.46
09 19 564 7324	08.47
09 19 564 7903	08.38
09 19 564 7904	08.40
09 19 564 7913	08.38
09 19 564 7914	08.40
09 19 564 7923	08.38
09 19 564 7924	08.40
09 19 564 7953	08.44
09 19 564 7963	08.44
09 19 564 7973	08.44
09 20 003 0220	04.22
09 20 003 0227	04.22
09 20 003 0301	04.04
09 20 003 0301	04.22
09 20 003 0301	04.32
09 20 003 0301	04.34
09 20 003 0305	04.34
09 20 003 0306	04.04
09 20 003 0306	04.34
09 20 003 0320	04.22
09 20 003 0320	04.35
09 20 003 0327	04.04
09 20 003 0327	04.22
09 20 003 0327	04.35
09 20 003 0423	04.22
09 20 003 0426	04.22
09 20 003 0623	04.22
09 20 003 0626	04.22
09 20 003 0720	04.22
09 20 003 0727	04.22
09 20 003 0801	04.34
09 20 003 0820	04.35
09 20 003 0827	04.35
09 20 003 1250	04.22
09 20 003 1443	04.22
09 20 003 1643	04.22
09 20 003 1750	04.22
09 20 003 5407	04.35
09 20 003 5408	04.35
09 20 003 5421	04.34
09 20 003 5422	04.17
09 20 003 5422	04.34
09 20 003 5425	04.05
09 20 003 5425	04.16
09 20 003 5425	04.34
09 20 003 5426	04.34
09 20 003 5427	04.34
09 20 003 5428	04.34
09 20 003 5441	04.35
09 20 003 5442	04.17
09 20 003 5442	04.35
09 20 003 5445	04.35
09 20 003 5446	04.35
09 20 003 5447	04.35
09 20 003 5448	04.35
09 20 003 5449	04.05
09 20 003 5449	04.16
09 20 003 5449	04.35
09 30 006 0301	04.44
09 30 006 0301	04.46
09 30 010 0301	04.44
09 30 010 0301	04.46
09 30 016 0301	04.44
09 30 016 0301	04.46
09 30 024 0301	04.44
09 30 024 0301	04.46
09 32 000 6180	04.36
09 32 000 6280	04.36
09 32 000 6295	04.48
09 33 000 6180	04.38
09 33 000 6180	04.46
09 33 000 6195	04.30
09 33 000 6280	04.38
09 33 000 6280	04.46
09 33 000 6295	04.30
09 33 000 9996	04.46
09 33 006 2602	04.46
09 33 006 2702	04.46
09 33 010 2602	04.46
09 33 010 2702	04.46
09 33 016 2602	04.46
09 33 016 2702	04.46
09 33 024 2602	04.46
09 33 024 2702	04.46
09 35 000 6103	02.68
09 35 000 6104	02.68
09 35 000 6105	02.68
09 35 000 6106	02.68
09 35 000 6107	02.68
09 35 000 6190	02.61
09 35 000 6190	02.62
09 35 000 6190	02.63
09 35 000 6190	02.64
09 35 000 6190	02.65
09 35 000 6190	02.66
09 35 000 6190	02.67
09 35 000 6190	02.68
09 35 000 6190	02.69
09 35 000 6203	02.68
09 35 000 6204	02.68
09 35 000 6205	02.68
09 35 000 6206	02.68
09 35 000 6207	02.68
09 35 000 9913	02.57
09 35 000 9914	02.56
09 35 000 9914	02.57
09 35 000 9915	02.56
09 35 002 0301	02.37
09 35 002 0303	02.51
09 35 002 0303	02.59
09 35 002 0303	02.65
09 35 002 0321	02.33
09 35 002 0323	02.48
09 35 002 0323	02.59
09 35 002 0323	02.61
09 35 002 0431	02.46
09 35 002 0431	02.69
09 35 002 0433	02.46
09 35 002 0433	02.69
09 35 002 2101	01.06

List of part numbers

Part number	Page
09 35 002 2101	02.33
09 35 002 2101	02.37
09 35 002 2102	01.06
09 35 002 2102	02.33
09 35 002 2102	02.37
09 35 002 3003	02.61
09 35 002 3003	02.65
09 35 002 3004	02.61
09 35 002 3004	02.65
09 35 002 4002	02.49
09 35 002 4002	02.50
09 35 002 4002	02.52
09 35 002 4002	02.53
09 35 002 4003	02.49
09 35 002 4003	02.52
09 35 002 4003	02.54
09 35 002 5402	02.33
09 35 002 5402	02.37
09 35 002 5402	02.47
09 35 002 5402	02.48
09 35 002 5402	02.51
09 35 002 5402	02.61
09 35 002 5402	02.65
09 35 002 5402 XL	02.47
09 35 002 5403 XL	02.47
09 35 002 5404	02.47
09 35 002 5404 XL	02.47
09 35 002 5411	02.47
09 35 002 5411	02.50
09 35 002 5411	02.53
09 35 002 5411	02.54
09 35 002 5411	02.64
09 35 002 5411	02.67
09 35 002 5411	02.71
09 35 002 5411	02.75
09 35 002 5413	02.47
09 35 002 6001	02.59
09 35 002 6002	02.59
09 35 004 0321	02.70
09 35 004 3003	02.70
09 35 004 3003	02.72
09 35 004 3004	02.70
09 35 004 3004	02.72
09 35 004 5401	02.72
09 35 004 5411	02.70
09 35 012 0311	02.39
09 35 012 0311	02.59
09 35 012 0312	02.39
09 35 012 0312	02.59
09 35 012 0331	02.34
09 35 012 0331	02.46
09 35 012 0331	02.59
09 35 014 0301	02.72
09 35 221 0401	02.42
09 35 221 0421	02.35
09 35 221 0501	02.40
09 35 222 0421	02.35
09 35 225 0311	02.38
09 35 225 0312	02.38
09 35 225 0331	02.34
09 35 225 0401	02.42
09 35 225 0402	02.43
09 35 225 0403	02.43
09 35 225 0421	02.35
09 35 226 0401	02.42
09 35 226 0402	02.43
09 35 226 0403	02.43
09 35 226 0421	02.35
09 35 227 0401	02.44
09 35 227 0421	02.36
09 35 228 0421	02.35
09 35 231 0311	02.66
09 35 231 0312	02.66
09 35 231 0331	02.62
09 35 231 0331	02.69
09 35 231 0332	02.63
09 35 231 0401	02.67
09 35 231 0423	02.64
09 35 232 0311	02.66
09 35 232 0312	02.66
09 35 232 0331	02.62
09 35 232 0331	02.69
09 35 232 0332	02.63
09 35 232 0401	02.67
09 35 232 0421	02.64
09 35 232 0423	02.64
09 35 234 0311	02.66
09 35 234 0312	02.66
09 35 234 0331	02.62
09 35 234 0331	02.69
09 35 234 0332	02.63
09 35 234 0401	02.67
09 35 234 0421	02.64
09 35 241 0401	02.53
09 35 241 0402	02.53
09 35 241 0421	02.50
09 35 241 0422	02.50
09 35 241 0501	02.55
09 35 242 0313	02.52
09 35 242 0333	02.49
09 35 242 0401	02.54
09 35 261 0401	02.60
09 35 261 0421	02.60
09 35 262 0401	02.60
09 35 431 0331	02.70
09 35 431 0421	02.71
09 35 431 0501	02.73
09 35 433 0311	02.72
09 35 433 0401	02.75
09 35 434 0311	02.72
09 35 434 0401	02.75
09 37 003 0301	04.04
09 37 003 0306	04.04
09 37 003 5402	04.17
09 37 003 5405	04.05
09 37 003 5405	04.16
09 45 100 1520	04.08
09 45 100 1560	04.09
09 45 100 1720	04.17
09 45 100 1760	04.17
09 45 115 1100	04.07
09 45 115 1102	04.07
09 45 115 1104	04.07
09 45 115 1106	04.07
09 45 115 1520	04.08
09 45 115 1522	04.08
09 45 115 1560	04.09
09 45 115 1720	04.17
09 45 115 1760	04.17
09 45 125 1100	04.07
09 45 125 1104	04.07
09 45 125 1300	04.17
09 45 125 1520	04.08
09 45 125 1560	04.09
09 45 125 1720	04.17
09 45 125 1760	04.17
09 45 145 1100	02.08
09 45 145 1300	02.19
09 45 145 1520	02.08
09 45 145 1520 XL	02.08
09 45 145 1560	02.10
09 45 145 1560 XL	02.10
09 45 145 1902	02.25
09 45 145 1905	02.25
09 45 145 1912	02.25
09 45 145 1915	02.25
09 45 145 2902	02.25
09 45 145 2905	02.25
09 45 145 2912	02.25
09 45 145 2915	02.25
09 45 145 3902	02.25
09 45 145 3905	02.25
09 45 145 3912	02.25
09 45 145 3915	02.25
09 45 145 9010	02.21
09 45 151 1100	01.14
09 45 151 1108	01.14
09 45 151 1109	01.14
09 45 151 1120	01.15
09 45 151 1121	01.15
09 45 151 1122	01.16
09 45 151 1130	01.17
09 45 151 1520	01.18
09 45 151 1520 XL	01.18
09 45 151 1525	01.18
09 45 151 1560	01.19
09 45 151 1560 XL	01.19
09 45 151 1561	01.19
09 45 195 1100	02.08
09 45 195 1520	02.08
09 45 195 1560	02.10
09 45 200 1560	04.06
09 45 215 1100	04.05
09 45 215 1101	04.05
09 45 215 1102	04.05
09 45 215 1103	04.05
09 45 215 1107	04.05
09 45 215 1108	04.05
09 45 215 1109	04.05
09 45 215 1110	04.05
09 45 215 1301	04.16
09 45 215 1560	04.06
09 45 215 1561	04.06
09 45 215 1562	04.06
09 45 215 1760	04.16
09 45 215 1761	04.16
09 45 225 1100	04.05
09 45 225 1107	04.05
09 45 225 1108	04.05
09 45 225 1300	04.16
09 45 225 1560	04.06
09 45 245 1102	02.07
09 45 245 1130	02.07
09 45 245 1300	02.18
09 45 245 1310	02.18
09 45 245 1320	02.18
09 45 245 1560	02.07
09 45 245 1590	02.07
09 45 245 1902	02.24
09 45 245 1903	02.24
09 45 245 1904	02.24
09 45 245 1905	02.24
09 45 295 1130	02.07
09 45 345 0000	02.32
09 45 345 0001	02.32
09 45 345 1560	02.09
09 45 452 0000	01.38
09 45 452 0001	01.38
09 45 452 1000	01.39
09 45 452 1001	01.39
09 45 452 1010	01.39
09 45 452 1500	01.38
09 45 452 1501	01.38
09 45 452 1502	01.38
09 45 452 1504	01.38
09 45 452 1506	01.38
09 45 452 1509	01.38
09 45 452 1510	01.38
09 45 452 1511	01.38
09 45 452 1512	01.38
09 45 452 1513	01.38
09 45 452 1514	01.38
09 45 452 1515	01.38
09 45 452 1516	01.38
09 45 452 1517	01.38
09 45 452 1518	01.38
09 45 452 1530	01.38
09 45 452 1531	01.38
09 45 452 1532	01.38
09 45 452 1534	01.38
09 45 452 1536	01.38
09 45 452 1539	01.38
09 45 452 1540	01.38
09 45 452 1541	01.38
09 45 452 1542	01.38
09 45 452 1543	01.38
09 45 452 1544	01.38
09 45 452 1545	01.38
09 45 452 1546	01.38
09 45 452 1547	01.38
09 45 452 1548	01.38
09 45 452 1560	01.38
09 45 452 1561	01.38
09 45 452 1901	01.36
09 45 452 1902	01.36
09 45 452 1903	01.36
09 45 452 1904	01.36
09 45 452 1910	01.36
09 45 452 1911	01.36
09 45 452 1912	01.36
09 45 452 1913	01.36
09 45 452 1914	01.36
09 45 452 1915	01.36
09 45 452 1920	01.36
09 45 452 1921	01.36
09 45 452 1922	01.36
09 45 452 1923	01.36
09 45 452 1924	01.36
09 45 452 1925	01.36
09 45 452 1930	01.37
09 45 452 1931	01.37
09 45 452 1932	01.37
09 45 452 1933	01.37
09 45 452 1934	01.37
09 45 452 1935	01.37
09 45 452 1940	01.37
09 45 452 1950	01.37
09 45 452 1951	01.37
09 45 452 1952	01.37
09 45 452 1953	01.37
09 45 452 1954	01.37
09 45 452 1955	01.37
09 45 452 1960	01.36
09 45 452 1961	01.36
09 45 452 1962	01.36
09 45 452 1963	01.36
09 45 452 1964	01.36
09 45 452 1965	01.36
09 45 452 1970	01.37
09 45 452 1971	01.37
09 45 452 1972	01.37
09 45 452 1973	01.37
09 45 452 1974	01.37
09 45 452 1975	01.37
09 45 502 0000	01.40
09 45 502 0001	01.40
09 45 502 0002	01.40

List of part numbers

Part number	Page
09 45 502 0003	01.40
09 45 502 0004	01.40
09 45 502 0005	01.40
09 45 502 0006	01.40
09 45 515 0020	04.04
09 45 515 0022	04.04
09 45 515 0024	04.06
09 45 525 0021	04.16
09 45 525 0027	04.16
09 45 525 0028	04.16
09 45 525 0040	04.16
09 45 525 0041	04.16
09 45 541 1900	02.23
09 45 541 1902	02.23
09 45 541 1903	02.23
09 45 541 1906	02.23
09 45 541 1907	02.23
09 45 541 1910	02.23
09 45 545 0021	02.04
09 45 545 0023	02.04
09 45 545 0027	02.04
09 45 545 0027	02.22
09 45 545 0028	02.04
09 45 545 0028	02.22
09 45 545 0028	02.32
09 45 545 0029	02.04
09 45 545 0029	02.22
09 45 545 0030	02.04
09 45 545 0031	02.04
09 45 545 0032	02.04
09 45 545 0032	02.22
09 45 545 0033	02.04
09 45 545 0033	02.22
09 45 545 1120	01.11
09 45 545 1120	02.32
09 45 545 1120	02.34
09 45 545 1120	02.39
09 45 545 1120	02.46
09 45 545 1122	01.12
09 45 545 1130	01.09
09 45 545 1134	01.09
09 45 545 1135	01.09
09 45 545 1138	01.09
09 45 545 1300	02.18
09 45 545 1305	02.18
09 45 545 1320	02.18
09 45 545 1325	02.18
09 45 545 1560	01.10
09 45 545 1561	01.11
09 45 545 1561	02.32
09 45 545 1561	02.34
09 45 545 1561	02.39
09 45 545 1561	02.46
09 45 545 1562	01.11
09 45 545 1562	02.32
09 45 545 1562	02.34
09 45 545 1562	02.39
09 45 545 1562	02.46
09 45 545 1563	01.12
09 45 545 1563	01.30
09 45 545 1564	01.12
09 45 545 1564	01.30
09 45 545 1568	01.10
09 45 545 1569	01.13
09 45 545 9010	02.22
09 45 545 9010	02.32
09 45 545 9010	02.58
09 45 545 9011	02.22
09 45 545 9012	02.22
09 45 551 1100	01.04
09 45 551 1100	02.05
09 45 551 1100	04.04
09 45 551 1100	04.16
09 45 551 1101	01.04
09 45 551 1102	01.04
09 45 551 1102	02.05
09 45 551 1102	04.04
09 45 551 1103	01.04
09 45 551 1103	02.05
09 45 551 1110	01.04
09 45 551 1110	02.05
09 45 551 1110	04.04
09 45 551 1110	04.16
09 45 551 1119	01.07
09 45 551 1120	01.07
09 45 551 1122	01.05
09 45 551 1123	01.05
09 45 551 1124	01.05
09 45 551 1126	01.05
09 45 551 1128	01.05
09 45 551 1130	01.08
09 45 551 1131	01.08
09 45 551 1140	01.07
09 45 551 1141	01.07
09 45 551 1142	01.07
09 45 551 1143	01.07
09 45 551 1150	02.06
09 45 551 1151	02.06
09 45 551 1530	01.08
09 45 551 1531	01.08
09 45 551 1540	02.06
09 45 551 1541	02.06
09 45 551 1560	01.08
09 45 595 0030	02.04
09 45 595 0031	02.04
09 45 600 0300	04.18
09 45 600 0301	02.20
09 45 600 0302	04.19
09 45 600 0310	04.18
09 45 600 0320	04.18
09 45 600 0321	02.20
09 45 600 0330	04.18
09 45 600 0331	02.20
09 45 600 0332	04.19
09 45 600 0340	04.18
09 45 600 0341	02.20
09 45 600 0342	04.19
09 45 771 0023	01.21
09 45 771 0025	01.21
09 45 771 0027	01.21
09 45 771 0051	01.21
09 45 771 0053	01.21
09 45 771 1123	01.21
09 45 771 1125	01.21
09 45 771 1127	01.21
09 45 771 1151	01.21
09 45 771 1153	01.21
09 45 771 1164	01.21
09 45 771 1166	01.21
09 45 771 1168	01.21
09 45 771 1173	01.21
09 45 771 1175	01.21
09 45 800 0000	01.20
09 45 800 0001	01.20
09 45 800 0002	01.20
09 45 800 0004	01.20
09 45 800 0005	01.20
09 45 800 0025	01.18
09 45 800 0025	01.20
09 45 800 0520	01.18
09 45 800 0520	01.20
09 45 800 0520	02.08
09 45 800 0520	02.36
09 45 800 0520	02.44
09 45 800 0520	04.08
09 45 800 0520	04.11
09 45 800 0520	04.17
09 45 800 0530	01.17
09 45 820 0000	04.05
09 45 820 0000	04.07
09 45 820 0000	04.08
09 45 820 0000	04.09
09 45 840 0011	02.10
09 45 840 0013	02.10
09 45 840 0017	02.10
09 45 840 0018	02.10
09 45 840 0019	02.10
09 45 845 0003	02.31
09 45 845 0009	02.31
09 45 845 0009 024	02.31
09 45 845 0010	02.31
09 45 845 0011 024	02.31
09 45 845 0013	02.31
09 45 845 0014	02.31
09 45 845 0015	02.31
09 45 845 0019	02.31
09 45 845 0020	02.31
09 45 845 1300	02.19
09 45 850 0001	01.15
09 45 850 0001	01.16
09 45 850 0001	01.19
09 45 850 0001	01.23
09 45 850 0002	01.15
09 45 850 0002	01.16
09 45 850 0002	01.19
09 45 850 0002	01.23
09 45 850 0003	01.15
09 45 850 0003	01.16
09 45 850 0003	01.19
09 45 850 0003	01.23
09 45 850 0005	01.15
09 45 850 0005	01.16
09 45 850 0005	01.19
09 45 850 0005	01.23
09 45 850 0007	01.15
09 45 850 0007	01.16
09 45 850 0007	01.19
09 45 850 0007	01.23
09 45 850 0008	01.15
09 45 850 0008	01.16
09 45 850 0008	01.19
09 45 850 0008	01.23
09 45 850 0009	01.15
09 45 850 0009	01.16
09 45 850 0009	01.19
09 45 850 0009	01.23
09 45 850 0010	01.15
09 45 850 0010	01.16
09 45 850 0010	01.19
09 45 850 0010	01.23
09 45 851 0000	01.30
09 45 851 0001	01.30
09 46 145 3410	02.29
09 46 145 3411	02.29
09 46 145 4400	02.28
09 46 145 4401	02.28
09 46 195 4400	02.28
09 46 245 3410	02.29
09 46 245 3430	02.29
09 46 245 4000	02.27
09 46 245 4001	02.27
09 46 245 4030	02.27
09 46 245 4031	02.27
09 46 245 4400	02.27
09 46 245 4430	02.27
09 46 295 4031	02.27
09 46 295 4430	02.27
09 46 500 0401	02.28
09 46 500 0402	02.28
09 46 500 0403	02.28
09 46 500 0404	02.28
09 46 500 0405	02.28
09 46 500 0406	02.28
09 46 500 0407	02.28
09 46 500 0408	02.28
09 46 500 3400	02.29
09 46 500 3401	02.29
09 46 500 4400	02.27
09 46 500 4401	02.27
09 46 500 4402	02.27
09 46 800 0000	02.30
09 46 800 0010	02.30
09 46 800 0098	02.30
09 46 800 0099	02.30
09 46 840 0000	02.28
09 46 840 0000	02.29
09 47 030 0001	01.22
09 47 030 0002	01.22
09 47 030 0003	01.22
09 47 030 0004	01.22
09 47 030 0005	01.22
09 47 030 0007	01.22
09 47 030 0023	01.22
09 47 030 0024	01.22
09 47 030 0025	01.22
09 47 030 0026	01.22
09 47 030 0027	01.22
09 47 030 0029	01.22
09 47 030 0045	01.22
09 47 030 0046	01.22
09 47 030 0047	01.22
09 47 030 0048	01.22
09 47 030 0049	01.22
09 47 030 0051	01.22
09 47 030 0067	01.22
09 47 030 0068	01.22
09 47 030 0069	01.22
09 47 030 0070	01.22
09 47 030 0071	01.22
09 47 030 0073	01.22
09 47 040 0001	01.22
09 47 040 0002	01.22
09 47 040 0003	01.22
09 47 040 0004	01.22
09 47 040 0005	01.22
09 47 040 0007	01.22
09 47 040 0023	01.22
09 47 040 0024	01.22
09 47 040 0025	01.22
09 47 040 0026	01.22
09 47 040 0027	01.22
09 47 040 0029	01.22
09 47 040 0045	01.22
09 47 040 0046	01.22
09 47 040 0047	01.22
09 47 040 0048	01.22
09 47 040 0049	01.22
09 47 040 0051	01.22
09 47 040 0067	01.22
09 47 040 0068	01.22
09 47 040 0069	01.22
09 47 040 0070	01.22
09 47 040 0071	01.22
09 47 040 0073	01.22
09 47 050 0001	01.22
09 47 050 0002	01.22
09 47 050 0003	01.22
09 47 050 0004	01.22
09 47 050 0005	01.22
09 47 050 0007	01.22
09 47 050 0023	01.22
09 47 050 0024	01.22
09 47 050 0025	01.22
09 47 050 0026	01.22
09 47 050 0027	01.22
09 47 050 0029	01.22
09 47 050 0045	01.22
09 47 050 0046	01.22
09 47 050 0047	01.22
09 47 050 0048	01.22

List of part numbers

Part number	Page
09 47 050 0049	01.22
09 47 050 0051	01.22
09 47 050 0067	01.22
09 47 050 0068	01.22
09 47 050 0069	01.22
09 47 050 0070	01.22
09 47 050 0071	01.22
09 47 050 0073	01.22
09 47 060 0001	01.22
09 47 060 0002	01.22
09 47 060 0003	01.22
09 47 060 0004	01.22
09 47 060 0005	01.22
09 47 060 0007	01.22
09 47 060 0023	01.22
09 47 060 0024	01.22
09 47 060 0025	01.22
09 47 060 0026	01.22
09 47 060 0027	01.22
09 47 060 0029	01.22
09 47 060 0045	01.22
09 47 060 0046	01.22
09 47 060 0047	01.22
09 47 060 0048	01.22
09 47 060 0049	01.22
09 47 060 0051	01.22
09 47 060 0067	01.22
09 47 060 0068	01.22
09 47 060 0069	01.22
09 47 060 0070	01.22
09 47 060 0071	01.22
09 47 060 0073	01.22
09 47 343 4006	01.21
09 47 343 4009	01.21
09 47 343 4012	01.21
09 47 343 4018	01.21
09 47 343 4020	01.21
09 47 343 4034	01.21
09 47 343 4037	01.21
09 47 343 4040	01.21
09 47 343 4046	01.21
09 47 343 4048	01.21
09 47 343 4090	01.21
09 47 343 4093	01.21
09 47 343 4096	01.21
09 47 343 4102	01.21
09 47 343 4104	01.21
09 47 616 1005	02.20
09 47 616 1008	02.20
09 47 616 1010	02.20
09 47 616 1020	02.20
09 47 616 1030	02.20
09 47 616 1050	02.20
09 47 616 1100	02.20
09 47 616 1200	02.20
09 55 115 6611 741	05.190
09 55 115 6612 333	05.190
09 55 115 6612 741	05.190
09 55 115 6621 741	05.190
09 55 115 6622 333	05.190
09 55 115 6622 741	05.190
09 55 115 7611 741	05.190
09 55 115 7612 741	05.190
09 55 115 7621 741	05.190
09 55 115 7622 741	05.190
09 55 129 6811 741	05.190
09 55 129 6812 333	05.190
09 55 129 6812 741	05.190
09 55 129 6821 741	05.190
09 55 129 6822 333	05.190
09 55 129 6822 741	05.190
09 55 129 7811 741	05.190
09 55 129 7812 741	05.190
09 55 129 7821 741	05.190
09 55 129 7822 741	05.190
09 55 155 6611 741	05.192
09 55 155 6612 333	05.192
09 55 155 6612 741	05.192
09 55 155 6621 741	05.192
09 55 155 6622 333	05.192
09 55 155 6622 741	05.192
09 55 155 7611 741	05.192
09 55 155 7612 741	05.192
09 55 155 7621 741	05.192
09 55 155 7622 741	05.192
09 55 156 6611 741	05.186
09 55 156 6612 333	05.186
09 55 156 6612 741	05.186
09 55 156 6615 741	05.188
09 55 156 6616 333	05.188
09 55 156 6616 741	05.188
09 55 156 6619 741	05.188
09 55 156 6620 333	05.188
09 55 156 6620 741	05.188
09 55 156 6621 741	05.186
09 55 156 6622 333	05.186
09 55 156 6622 741	05.186
09 55 156 7611 741	05.186
09 55 156 7612 741	05.186
09 55 156 7615 741	05.188
09 55 156 7616 741	05.188
09 55 156 7619 741	05.188
09 55 156 7620 741	05.188
09 55 156 7621 741	05.186
09 55 156 7622 741	05.186
09 55 166 6811 741	05.186
09 55 166 6812 333	05.186
09 55 166 6812 741	05.186
09 55 166 6815 741	05.188
09 55 166 6816 333	05.188
09 55 166 6816 741	05.188
09 55 166 6819 741	05.188
09 55 166 6820 333	05.188
09 55 166 6820 741	05.188
09 55 166 6821 741	05.186
09 55 166 6822 333	05.186
09 55 166 6822 741	05.186
09 55 166 7811 741	05.186
09 55 166 7812 741	05.186
09 55 166 7815 741	05.188
09 55 166 7816 741	05.188
09 55 166 7819 741	05.188
09 55 166 7820 741	05.188
09 55 166 7821 741	05.186
09 55 166 7822 741	05.186
09 55 169 6811 741	05.192
09 55 169 6812 333	05.192
09 55 169 6812 741	05.192
09 55 169 6821 741	05.192
09 55 169 6822 333	05.192
09 55 169 6822 741	05.192
09 55 169 7811 741	05.192
09 55 169 7812 741	05.192
09 55 169 7821 741	05.192
09 55 169 7822 741	05.192
09 55 215 6611 741	05.190
09 55 215 6612 333	05.190
09 55 215 6612 741	05.190
09 55 215 6621 741	05.190
09 55 215 6622 333	05.190
09 55 215 6622 741	05.190
09 55 215 7611 741	05.190
09 55 215 7612 741	05.190
09 55 215 7621 741	05.190
09 55 215 7622 741	05.190
09 55 229 6811 741	05.190
09 55 229 6812 333	05.190
09 55 229 6812 741	05.190
09 55 229 6821 741	05.190
09 55 229 6822 333	05.190
09 55 229 6822 741	05.190
09 55 229 7811 741	05.190
09 55 229 7812 741	05.190
09 55 229 7821 741	05.190
09 55 229 7822 741	05.190
09 55 255 6611 741	05.192
09 55 255 6612 741	05.192
09 55 255 6621 741	05.192
09 55 255 6622 741	05.192
09 55 255 7611 741	05.192
09 55 255 7612 741	05.192
09 55 255 7621 741	05.192
09 55 255 7622 741	05.192
09 55 256 6611 741	05.186
09 55 256 6612 333	05.186
09 55 256 6612 741	05.186
09 55 256 6615 741	05.188
09 55 256 6616 333	05.188
09 55 256 6616 741	05.188
09 55 256 6619 741	05.188
09 55 256 6620 333	05.188
09 55 256 6620 741	05.188
09 55 256 6621 741	05.186
09 55 256 6622 333	05.186
09 55 256 6622 741	05.186
09 55 256 7611 741	05.186
09 55 256 7612 741	05.186
09 55 256 7615 741	05.188
09 55 256 7616 741	05.188
09 55 256 7619 741	05.188
09 55 256 7620 741	05.188
09 55 256 7621 741	05.186
09 55 256 7622 741	05.186
09 55 266 6811 741	05.186
09 55 266 6812 333	05.186
09 55 266 6812 741	05.186
09 55 266 6815 741	05.188
09 55 266 6816 333	05.188
09 55 266 6816 741	05.188
09 55 266 6819 741	05.188
09 55 266 6820 333	05.188
09 55 266 6820 741	05.188
09 55 266 6821 741	05.186
09 55 266 6822 333	05.186
09 55 266 6822 741	05.186
09 55 266 7811 741	05.186
09 55 266 7812 741	05.186
09 55 266 7815 741	05.188
09 55 266 7816 741	05.188
09 55 266 7819 741	05.188
09 55 266 7820 741	05.188
09 55 266 7821 741	05.186
09 55 266 7822 741	05.186
09 55 269 6811 741	05.192
09 55 269 6812 741	05.192
09 55 269 6821 741	05.192
09 55 269 6822 741	05.192
09 55 269 7811 741	05.192
09 55 269 7812 741	05.192
09 55 269 7821 741	05.192
09 55 269 7822 741	05.192
09 55 315 6611 741	05.190
09 55 315 6612 333	05.190
09 55 315 6612 741	05.190
09 55 315 6621 741	05.190
09 55 315 6622 333	05.190
09 55 315 6622 741	05.190
09 55 315 7611 741	05.190
09 55 315 7612 741	05.190
09 55 315 7621 741	05.190
09 55 315 7622 741	05.190
09 55 329 6811 741	05.190
09 55 329 6812 333	05.190
09 55 329 6812 741	05.190
09 55 329 6821 741	05.190
09 55 329 6822 333	05.190
09 55 329 6822 741	05.190
09 55 329 7811 741	05.190
09 55 329 7812 741	05.190
09 55 329 7821 741	05.190
09 55 329 7822 741	05.190
09 55 355 6611 741	05.192
09 55 355 6612 741	05.192
09 55 355 6621 741	05.192
09 55 355 6622 741	05.192
09 55 355 7611 741	05.192
09 55 355 7612 741	05.192
09 55 355 7621 741	05.192
09 55 355 7622 741	05.192
09 55 356 6611 741	05.186
09 55 356 6612 333	05.186
09 55 356 6612 741	05.186
09 55 356 6615 741	05.188
09 55 356 6616 333	05.188
09 55 356 6616 741	05.188
09 55 356 6619 741	05.188
09 55 356 6620 333	05.188
09 55 356 6620 741	05.188
09 55 356 6621 741	05.186
09 55 356 6622 333	05.186
09 55 356 6622 741	05.186
09 55 356 7611 741	05.186
09 55 356 7612 741	05.186
09 55 356 7615 741	05.188
09 55 356 7616 741	05.188
09 55 356 7619 741	05.188
09 55 356 7620 741	05.188
09 55 356 7621 741	05.186
09 55 356 7622 741	05.186
09 55 366 6811 741	05.186
09 55 366 6812 333	05.186
09 55 366 6812 741	05.186
09 55 366 6815 741	05.188
09 55 366 6816 333	05.188
09 55 366 6816 741	05.188
09 55 366 6819 741	05.188
09 55 366 6820 333	05.188
09 55 366 6820 741	05.188
09 55 366 6821 741	05.186
09 55 366 6822 333	05.186
09 55 366 6822 741	05.186
09 55 366 7811 741	05.186
09 55 366 7812 741	05.186
09 55 366 7815 741	05.188
09 55 366 7816 741	05.188
09 55 366 7819 741	05.188
09 55 366 7820 741	05.188
09 55 366 7821 741	05.186
09 55 366 7822 741	05.186
09 55 369 6811 741	05.192
09 55 369 6812 741	05.192
09 55 369 6821 741	05.192
09 55 369 6822 741	05.192
09 55 369 7811 741	05.192
09 55 369 7812 741	05.192
09 55 369 7821 741	05.192
09 55 369 7822 741	05.192
09 55 415 6611 741	05.190
09 55 415 6612 333	05.190
09 55 415 6612 741	05.190
09 55 415 6621 741	05.190
09 55 415 6622 333	05.190
09 55 415 6622 741	05.190
09 55 415 7611 741	05.190
09 55 415 7612 741	05.190
09 55 415 7621 741	05.190
09 55 415 7622 741	05.190
09 55 429 6811 741	05.190
09 55 429 6812 333	05.190
09 55 429 6812 741	05.190

List of part numbers

Part number	Page
09 55 429 6821 741	05.190
09 55 429 6822 333	05.190
09 55 429 6822 741	05.190
09 55 429 7811 741	05.190
09 55 429 7812 741	05.190
09 55 429 7821 741	05.190
09 55 429 7822 741	05.190
09 55 455 6611 741	05.192
09 55 455 6612 741	05.192
09 55 455 6621 741	05.192
09 55 455 6622 741	05.192
09 55 455 7611 741	05.192
09 55 455 7612 741	05.192
09 55 455 7621 741	05.192
09 55 455 7622 741	05.192
09 55 456 6611 741	05.186
09 55 456 6612 333	05.186
09 55 456 6612 741	05.186
09 55 456 6615 741	05.188
09 55 456 6616 333	05.188
09 55 456 6616 741	05.188
09 55 456 6619 741	05.188
09 55 456 6620 333	05.188
09 55 456 6620 741	05.188
09 55 456 6621 741	05.186
09 55 456 6622 333	05.186
09 55 456 6622 741	05.186
09 55 456 7611 741	05.186
09 55 456 7612 741	05.186
09 55 456 7615 741	05.188
09 55 456 7616 741	05.188
09 55 456 7619 741	05.188
09 55 456 7620 741	05.188
09 55 456 7621 741	05.186
09 55 456 7622 741	05.186
09 55 466 6811 741	05.186
09 55 466 6812 333	05.186
09 55 466 6812 741	05.186
09 55 466 6815 741	05.188
09 55 466 6816 333	05.188
09 55 466 6816 741	05.188
09 55 466 6819 741	05.188
09 55 466 6820 333	05.188
09 55 466 6820 741	05.188
09 55 466 6821 741	05.186
09 55 466 6822 333	05.186
09 55 466 6822 741	05.186
09 55 466 7811 741	05.186
09 55 466 7812 741	05.186
09 55 466 7815 741	05.188
09 55 466 7816 741	05.188
09 55 466 7819 741	05.188
09 55 466 7820 741	05.188
09 55 466 7821 741	05.186
09 55 466 7822 741	05.186
09 55 469 6811 741	05.192
09 55 469 6812 741	05.192
09 55 469 6821 741	05.192
09 55 469 6822 741	05.192
09 55 469 7811 741	05.192
09 55 469 7812 741	05.192
09 55 469 7821 741	05.192
09 55 469 7822 741	05.192
09 56 000 8155	05.40
09 56 000 8157	05.40
09 56 000 8165	05.40
09 56 000 8167	05.40
09 56 000 8175	05.40
09 56 000 8177	05.40
09 56 000 8255	05.40
09 56 000 8257	05.40
09 56 000 8265	05.40
09 56 000 8267	05.40
09 56 000 8275	05.40
09 56 000 8277	05.40
09 56 100 4701	05.39
09 56 100 4704	05.42
09 56 100 4715 050	05.42
09 56 100 5601	05.39
09 56 100 5604	05.42
09 56 100 5615 050	05.42
09 56 151 5500	05.47
09 56 151 5512	05.48
09 56 151 5513	05.48
09 56 151 7500	05.47
09 56 151 7512	05.48
09 56 151 7513	05.48
09 56 152 5612	05.44
09 56 152 5613	05.44
09 56 152 7612	05.44
09 56 152 7613	05.44
09 56 161 5700	05.47
09 56 161 5712	05.48
09 56 161 5713	05.48
09 56 161 7700	05.47
09 56 161 7712	05.48
09 56 161 7713	05.48
09 56 162 5812	05.44
09 56 162 5813	05.44
09 56 162 7812	05.44
09 56 162 7813	05.44
09 56 200 4701	05.39
09 56 200 4704	05.42
09 56 200 4715 050	05.42
09 56 200 5601	05.39
09 56 200 5604	05.42
09 56 200 5615 050	05.42
09 56 251 5500	05.47
09 56 251 5512	05.48
09 56 251 5513	05.48
09 56 251 7500	05.47
09 56 251 7512	05.48
09 56 251 7513	05.48
09 56 252 5612	05.44
09 56 252 5613	05.44
09 56 252 7612	05.44
09 56 252 7613	05.44
09 56 261 5700	05.47
09 56 261 5712	05.48
09 56 261 5713	05.48
09 56 261 7700	05.47
09 56 261 7712	05.48
09 56 261 7713	05.48
09 56 262 5812	05.44
09 56 262 5813	05.44
09 56 262 7812	05.44
09 56 262 7813	05.44
09 56 300 4701	05.39
09 56 300 4704	05.42
09 56 300 4715 050	05.42
09 56 300 5601	05.39
09 56 300 5604	05.42
09 56 300 5615 050	05.42
09 56 351 5500	05.47
09 56 351 5512	05.48
09 56 351 5513	05.48
09 56 351 7500	05.47
09 56 351 7512	05.48
09 56 351 7513	05.48
09 56 352 5612	05.44
09 56 352 5613	05.44
09 56 352 7612	05.44
09 56 352 7613	05.44
09 56 361 5700	05.47
09 56 361 5712	05.48
09 56 361 5713	05.48
09 56 361 7700	05.47
09 56 361 7712	05.48
09 56 361 7713	05.48
09 56 362 5812	05.44
09 56 362 5813	05.44
09 56 362 7812	05.44
09 56 362 7813	05.44
09 56 400 4701	05.39
09 56 400 4704	05.42
09 56 400 4715 050	05.42
09 56 400 5601	05.39
09 56 400 5604	05.42
09 56 400 5615 050	05.42
09 56 451 5500	05.47
09 56 451 5512	05.48
09 56 451 5513	05.48
09 56 451 7500	05.47
09 56 451 7512	05.48
09 56 451 7513	05.48
09 56 452 5612	05.44
09 56 452 5613	05.44
09 56 452 7612	05.44
09 56 452 7613	05.44
09 56 461 5700	05.47
09 56 461 5712	05.48
09 56 461 5713	05.48
09 56 461 7700	05.47
09 56 461 7712	05.48
09 56 461 7713	05.48
09 56 462 5812	05.44
09 56 462 5813	05.44
09 56 462 7812	05.44
09 56 462 7813	05.44
09 56 500 4701	05.39
09 56 500 4704	05.42
09 56 500 4715 050	05.42
09 56 500 5601	05.39
09 56 500 5604	05.42
09 56 500 5615 050	05.42
09 56 551 5500	05.47
09 56 551 5512	05.48
09 56 551 5513	05.48
09 56 551 7500	05.47
09 56 551 7512	05.48
09 56 551 7513	05.48
09 56 552 5612	05.44
09 56 552 5613	05.44
09 56 552 7612	05.44
09 56 552 7613	05.44
09 56 561 5700	05.47
09 56 561 5712	05.48
09 56 561 5713	05.48
09 56 561 7700	05.47
09 56 561 7712	05.48
09 56 561 7713	05.48
09 56 562 5812	05.44
09 56 562 5813	05.44
09 56 562 7812	05.44
09 56 562 7813	05.44
09 57 308 0500 000	04.11
09 57 308 0501 000	04.11
09 57 368 0500 000	04.11
09 57 368 0501 000	04.11
09 57 400 0001 000	02.12
09 57 400 0001 000	04.14
09 57 400 0002 000	02.12
09 57 400 0002 000	04.14
09 57 400 0003 000	02.12
09 57 400 0003 000	04.14
09 57 400 0004 000	02.12
09 57 400 0004 000	04.14
09 57 402 0500 000	02.11
09 57 402 0501 000	02.11
09 57 407 0001 000	04.10
09 57 407 0002 000	04.10
09 57 409 0500 000	02.11
09 57 409 0501 000	02.11
09 57 441 0500 000	02.11
09 57 441 0501 000	02.11
09 57 442 0502 001	02.11
09 57 442 0503 001	02.11
09 57 467 0004 000	04.10
09 57 467 0005 000	04.10
09 57 468 0500 000	02.11
09 57 468 0501 000	02.11
09 57 508 0500 000	04.13
09 57 508 0501 000	04.13
09 57 508 0510 000	04.13
09 57 508 0511 000	04.13
09 57 568 0500 000	04.13
09 57 568 0501 000	04.13
09 57 568 0510 000	04.13
09 57 568 0511 000	04.13
09 62 003 0304	04.30
09 64 100 7210	05.97
09 64 100 7220	05.97
09 64 100 7230	05.97
09 64 100 7240	05.97
09 64 111 7210	05.106
09 64 111 7217	05.108
09 64 111 7218	05.108
09 64 111 7220	05.106
09 64 111 7227	05.108
09 64 111 7228	05.108
09 64 111 7230	05.106
09 64 111 7237	05.108
09 64 111 7238	05.108
09 64 111 7240	05.106
09 64 111 7247	05.108
09 64 111 7248	05.108
09 64 111 7800	05.94
09 64 112 7210	05.98
09 64 112 7215	05.100
09 64 112 7216	05.100

List of part numbers

Part number	Page
09 64 112 7220	05.98
09 64 112 7225	05.100
09 64 112 7226	05.100
09 64 112 7230	05.98
09 64 112 7235	05.100
09 64 112 7236	05.100
09 64 112 7240	05.98
09 64 112 7245	05.100
09 64 112 7246	05.100
09 64 112 7800	05.92
09 64 113 7802	05.93
09 64 114 7212	05.102
09 64 114 7213	05.102
09 64 114 7214	05.104
09 64 114 7215	05.104
09 64 114 7222	05.102
09 64 114 7223	05.102
09 64 114 7224	05.104
09 64 114 7225	05.104
09 64 114 7232	05.102
09 64 114 7233	05.102
09 64 114 7234	05.104
09 64 114 7235	05.104
09 64 114 7242	05.102
09 64 114 7243	05.102
09 64 114 7244	05.104
09 64 114 7245	05.104
09 64 121 7210	05.106
09 64 121 7217	05.108
09 64 121 7218	05.108
09 64 121 7220	05.106
09 64 121 7227	05.108
09 64 121 7228	05.108
09 64 121 7230	05.106
09 64 121 7237	05.108
09 64 121 7238	05.108
09 64 121 7240	05.106
09 64 121 7247	05.108
09 64 121 7248	05.108
09 64 121 7800	05.94
09 64 122 7210	05.98
09 64 122 7215	05.100
09 64 122 7216	05.100
09 64 122 7220	05.98
09 64 122 7225	05.100
09 64 122 7226	05.100
09 64 122 7230	05.98
09 64 122 7235	05.100
09 64 122 7236	05.100
09 64 122 7240	05.98
09 64 122 7245	05.100
09 64 122 7246	05.100
09 64 122 7800	05.92
09 64 123 7802	05.93
09 64 124 7212	05.102
09 64 124 7213	05.102
09 64 124 7214	05.104
09 64 124 7215	05.104
09 64 124 7222	05.102
09 64 124 7223	05.102
09 64 124 7224	05.104
09 64 124 7225	05.104
09 64 124 7232	05.102
09 64 124 7233	05.102
09 64 124 7234	05.104
09 64 124 7235	05.104
09 64 124 7242	05.102
09 64 124 7243	05.102
09 64 124 7244	05.104
09 64 124 7245	05.104
09 64 200 7210	05.97
09 64 200 7220	05.97
09 64 200 7230	05.97
09 64 200 7240	05.97
09 64 211 7210	05.106
09 64 211 7217	05.108
09 64 211 7218	05.108
09 64 211 7220	05.106
09 64 211 7227	05.108
09 64 211 7228	05.108
09 64 211 7230	05.106
09 64 211 7237	05.108
09 64 211 7238	05.108
09 64 211 7240	05.106
09 64 211 7247	05.108
09 64 211 7248	05.108
09 64 211 7800	05.94
09 64 212 7210	05.98
09 64 212 7215	05.100
09 64 212 7216	05.100
09 64 212 7220	05.98
09 64 212 7225	05.100
09 64 212 7226	05.100
09 64 212 7230	05.98
09 64 212 7235	05.100
09 64 212 7236	05.100
09 64 212 7240	05.98
09 64 212 7245	05.100
09 64 212 7246	05.100
09 64 212 7800	05.92
09 64 213 7802	05.93
09 64 214 7212	05.102
09 64 214 7213	05.102
09 64 214 7214	05.104
09 64 214 7215	05.104
09 64 214 7222	05.102
09 64 214 7223	05.102
09 64 214 7224	05.104
09 64 214 7225	05.104
09 64 214 7232	05.102
09 64 214 7233	05.102
09 64 214 7234	05.104
09 64 214 7235	05.104
09 64 214 7242	05.102
09 64 214 7243	05.102
09 64 214 7244	05.104
09 64 214 7245	05.104
09 64 221 7210	05.106
09 64 221 7217	05.108
09 64 221 7218	05.108
09 64 221 7220	05.106
09 64 221 7227	05.108
09 64 221 7228	05.108
09 64 221 7230	05.106
09 64 221 7237	05.108
09 64 221 7238	05.108
09 64 221 7240	05.106
09 64 221 7247	05.108
09 64 221 7248	05.108
09 64 221 7800	05.94
09 64 222 7210	05.98
09 64 222 7215	05.100
09 64 222 7216	05.100
09 64 222 7220	05.98
09 64 222 7225	05.100
09 64 222 7226	05.100
09 64 222 7230	05.98
09 64 222 7235	05.100
09 64 222 7236	05.100
09 64 222 7240	05.98
09 64 222 7245	05.100
09 64 222 7246	05.100
09 64 222 7800	05.92
09 64 223 7802	05.93
09 64 224 7212	05.102
09 64 224 7213	05.102
09 64 224 7214	05.104
09 64 224 7215	05.104
09 64 224 7222	05.102
09 64 224 7223	05.102
09 64 224 7224	05.104
09 64 224 7225	05.104
09 64 224 7232	05.102
09 64 224 7233	05.102
09 64 224 7234	05.104
09 64 224 7235	05.104
09 64 224 7242	05.102
09 64 224 7243	05.102
09 64 224 7244	05.104
09 64 224 7245	05.104
09 64 300 7210	05.97
09 64 300 7220	05.97
09 64 300 7230	05.97
09 64 300 7240	05.97
09 64 311 7210	05.106
09 64 311 7217	05.108
09 64 311 7218	05.108
09 64 311 7220	05.106
09 64 311 7227	05.108
09 64 311 7228	05.108
09 64 311 7230	05.106
09 64 311 7237	05.108
09 64 311 7238	05.108
09 64 311 7240	05.106
09 64 311 7247	05.108
09 64 311 7248	05.108
09 64 311 7800	05.94
09 64 312 7210	05.98
09 64 312 7215	05.100
09 64 312 7216	05.100
09 64 312 7220	05.98
09 64 312 7225	05.100
09 64 312 7226	05.100
09 64 312 7230	05.98
09 64 312 7235	05.100
09 64 312 7236	05.100
09 64 312 7240	05.98
09 64 312 7245	05.100
09 64 312 7246	05.100
09 64 312 7800	05.92
09 64 313 7802	05.93
09 64 314 7212	05.102
09 64 314 7213	05.102
09 64 314 7214	05.104
09 64 314 7215	05.104
09 64 314 7222	05.102
09 64 314 7223	05.102
09 64 314 7224	05.104
09 64 314 7225	05.104
09 64 314 7232	05.102
09 64 314 7233	05.102
09 64 314 7234	05.104
09 64 314 7235	05.104
09 64 314 7242	05.102
09 64 314 7243	05.102
09 64 314 7244	05.104
09 64 314 7245	05.104
09 64 321 7210	05.106
09 64 321 7217	05.108
09 64 321 7218	05.108
09 64 321 7220	05.106
09 64 321 7227	05.108
09 64 321 7228	05.108
09 64 321 7230	05.106
09 64 321 7237	05.108
09 64 321 7238	05.108
09 64 321 7240	05.106
09 64 321 7247	05.108
09 64 321 7248	05.108
09 64 321 7800	05.94
09 64 322 7210	05.98
09 64 322 7215	05.100
09 64 322 7216	05.100
09 64 322 7220	05.98
09 64 322 7225	05.100
09 64 322 7226	05.100
09 64 322 7230	05.98
09 64 322 7235	05.100
09 64 322 7236	05.100
09 64 322 7240	05.98
09 64 322 7245	05.100
09 64 322 7246	05.100
09 64 322 7800	05.92
09 64 323 7802	05.93
09 64 324 7212	05.102
09 64 324 7213	05.102
09 64 324 7214	05.104
09 64 324 7215	05.104
09 64 324 7222	05.102
09 64 324 7223	05.102
09 64 324 7224	05.104
09 64 324 7225	05.104
09 64 324 7232	05.102
09 64 324 7233	05.102
09 64 324 7234	05.104
09 64 324 7235	05.104
09 64 324 7242	05.102
09 64 324 7243	05.102
09 64 324 7244	05.104
09 64 324 7245	05.104
09 64 400 7210	05.97
09 64 400 7220	05.97
09 64 400 7230	05.97
09 64 400 7240	05.97
09 64 411 7210	05.106
09 64 411 7217	05.108
09 64 411 7218	05.108
09 64 411 7220	05.106
09 64 411 7227	05.108
09 64 411 7228	05.108
09 64 411 7230	05.106
09 64 411 7237	05.108
09 64 411 7238	05.108
09 64 411 7240	05.106
09 64 411 7247	05.108
09 64 411 7248	05.108
09 64 411 7800	05.94
09 64 412 7210	05.98
09 64 412 7215	05.100
09 64 412 7216	05.100
09 64 412 7220	05.98
09 64 412 7225	05.100
09 64 412 7226	05.100
09 64 412 7230	05.98
09 64 412 7235	05.100
09 64 412 7236	05.100
09 64 412 7240	05.98
09 64 412 7245	05.100
09 64 412 7246	05.100
09 64 413 7802	05.93
09 64 414 7212	05.102
09 64 414 7213	05.102
09 64 414 7214	05.104
09 64 414 7215	05.104
09 64 414 7222	05.102
09 64 414 7223	05.102
09 64 414 7224	05.104
09 64 414 7225	05.104
09 64 414 7232	05.102
09 64 414 7233	05.102
09 64 414 7234	05.104
09 64 414 7235	05.104
09 64 414 7242	05.102
09 64 414 7243	05.102

List of part numbers

Part number	Page
09 64 414 7244	05.104
09 64 414 7245	05.104
09 64 421 7210	05.106
09 64 421 7217	05.108
09 64 421 7218	05.108
09 64 421 7220	05.106
09 64 421 7227	05.108
09 64 421 7228	05.108
09 64 421 7230	05.106
09 64 421 7237	05.108
09 64 421 7238	05.108
09 64 421 7240	05.106
09 64 421 7247	05.108
09 64 421 7248	05.108
09 64 421 7800	05.94
09 64 422 7210	05.98
09 64 422 7215	05.100
09 64 422 7216	05.100
09 64 422 7220	05.98
09 64 422 7225	05.100
09 64 422 7226	05.100
09 64 422 7230	05.98
09 64 422 7235	05.100
09 64 422 7236	05.100
09 64 422 7240	05.98
09 64 422 7245	05.100
09 64 422 7246	05.100
09 64 423 7802	05.93
09 64 424 7212	05.102
09 64 424 7213	05.102
09 64 424 7214	05.104
09 64 424 7215	05.104
09 64 424 7222	05.102
09 64 424 7223	05.102
09 64 424 7224	05.104
09 64 424 7225	05.104
09 64 424 7232	05.102
09 64 424 7233	05.102
09 64 424 7234	05.104
09 64 424 7235	05.104
09 64 424 7242	05.102
09 64 424 7243	05.102
09 64 424 7244	05.104
09 64 424 7245	05.104
09 65 121 6701	05.08
09 65 121 6702	05.08
09 65 121 6703	05.08
09 65 121 7701	05.08
09 65 121 7702	05.08
09 65 121 7703	05.08
09 65 122 6800	05.16
09 65 122 6801	05.16
09 65 122 6802	05.16
09 65 122 6803	05.16
09 65 122 7800	05.16
09 65 122 7801	05.16
09 65 122 7802	05.16
09 65 122 7803	05.16
09 65 123 6800	05.16
09 65 123 6801	05.16
09 65 123 6802	05.16
09 65 123 6803	05.16
09 65 123 7800	05.16
09 65 123 7801	05.16
09 65 123 7802	05.16
09 65 123 7803	05.16
09 65 129 6701	05.178
09 65 129 6702	05.178
09 65 129 6703	05.178
09 65 129 7701	05.178
09 65 129 7702	05.178
09 65 129 7703	05.178
09 65 161 6711	05.08
09 65 161 6712	05.08
09 65 161 6713	05.08
09 65 161 7711	05.08
09 65 161 7712	05.08
09 65 161 7713	05.08
09 65 162 6810	05.14
09 65 162 6811	05.14
09 65 162 6812	05.14
09 65 162 6813	05.14
09 65 162 6815	05.20
09 65 162 6816	05.20
09 65 162 6817	05.20
09 65 162 7810	05.14
09 65 162 7811	05.14
09 65 162 7812	05.14
09 65 162 7813	05.14
09 65 162 7815	05.20
09 65 162 7816	05.20
09 65 162 7817	05.20
09 65 163 6810	05.14
09 65 163 6811	05.14
09 65 163 6812	05.14
09 65 163 6813	05.14
09 65 163 7810	05.14
09 65 163 7811	05.14
09 65 163 7812	05.14
09 65 163 7813	05.14
09 65 166 6810	05.180
09 65 166 6811	05.180
09 65 166 6812	05.180
09 65 166 6813	05.180
09 65 166 6815	05.182
09 65 166 6816	05.182
09 65 166 6817	05.182
09 65 166 7810	05.180
09 65 166 7811	05.180
09 65 166 7812	05.180
09 65 166 7813	05.180
09 65 166 7815	05.182
09 65 166 7816	05.182
09 65 166 7817	05.182
09 65 167 6810	05.180
09 65 167 6811	05.180
09 65 167 6812	05.180
09 65 167 6813	05.180
09 65 167 7810	05.180
09 65 167 7811	05.180
09 65 167 7812	05.180
09 65 167 7813	05.180
09 65 169 6711	05.178
09 65 169 6712	05.178
09 65 169 6713	05.178
09 65 169 7711	05.178
09 65 169 7712	05.178
09 65 169 7713	05.178
09 65 221 6701	05.08
09 65 221 6702	05.08
09 65 221 6703	05.08
09 65 221 7701	05.08
09 65 221 7702	05.08
09 65 221 7703	05.08
09 65 222 6800	05.16
09 65 222 6801	05.16
09 65 222 6802	05.16
09 65 222 6803	05.16
09 65 222 7800	05.16
09 65 222 7801	05.16
09 65 222 7802	05.16
09 65 222 7803	05.16
09 65 223 6800	05.16
09 65 223 6801	05.16
09 65 223 6802	05.16
09 65 223 6803	05.16
09 65 223 7800	05.16
09 65 223 7801	05.16
09 65 223 7802	05.16
09 65 223 7803	05.16
09 65 229 6701	05.178
09 65 229 6702	05.178
09 65 229 6703	05.178
09 65 229 7701	05.178
09 65 229 7702	05.178
09 65 229 7703	05.178
09 65 261 6711	05.08
09 65 261 6712	05.08
09 65 261 6713	05.08
09 65 261 7711	05.08
09 65 261 7712	05.08
09 65 261 7713	05.08
09 65 262 6810	05.14
09 65 262 6811	05.14
09 65 262 6812	05.14
09 65 262 6813	05.14
09 65 262 6815	05.20
09 65 262 6816	05.20
09 65 262 6817	05.20
09 65 262 7810	05.14
09 65 262 7811	05.14
09 65 262 7812	05.14
09 65 262 7813	05.14
09 65 262 7815	05.20
09 65 262 7816	05.20
09 65 262 7817	05.20
09 65 263 6810	05.14
09 65 263 6811	05.14
09 65 263 6812	05.14
09 65 263 6813	05.14
09 65 263 7810	05.14
09 65 263 7811	05.14
09 65 263 7812	05.14
09 65 263 7813	05.14
09 65 266 6810	05.180
09 65 266 6811	05.180
09 65 266 6812	05.180
09 65 266 6813	05.180
09 65 266 6815	05.182
09 65 266 6816	05.182
09 65 266 6817	05.182
09 65 266 7810	05.180
09 65 266 7811	05.180
09 65 266 7812	05.180
09 65 266 7813	05.180
09 65 266 7815	05.182
09 65 266 7816	05.182
09 65 266 7817	05.182
09 65 267 6810	05.180
09 65 267 6811	05.180
09 65 267 6812	05.180
09 65 267 6813	05.180
09 65 267 7810	05.180
09 65 267 7811	05.180
09 65 267 7812	05.180
09 65 267 7813	05.180
09 65 269 6711	05.178
09 65 269 6712	05.178
09 65 269 6713	05.178
09 65 269 7711	05.178
09 65 269 7712	05.178
09 65 269 7713	05.178
09 65 321 6701	05.08
09 65 321 6702	05.08
09 65 321 6703	05.08
09 65 321 7701	05.08
09 65 321 7702	05.08
09 65 321 7703	05.08
09 65 322 6800	05.16
09 65 322 6801	05.16
09 65 322 6802	05.16
09 65 322 6803	05.16
09 65 322 7800	05.16
09 65 322 7801	05.16
09 65 322 7802	05.16
09 65 322 7803	05.16
09 65 323 6800	05.16
09 65 323 6801	05.16
09 65 323 6802	05.16
09 65 323 6803	05.16
09 65 323 7800	05.16
09 65 323 7801	05.16
09 65 323 7802	05.16
09 65 323 7803	05.16
09 65 329 6701	05.178
09 65 329 6702	05.178
09 65 329 6703	05.178
09 65 329 7701	05.178
09 65 329 7702	05.178
09 65 329 7703	05.178
09 65 361 6711	05.08
09 65 361 6712	05.08
09 65 361 6713	05.08
09 65 361 7711	05.08
09 65 361 7712	05.08
09 65 361 7713	05.08
09 65 362 6810	05.14
09 65 362 6811	05.14
09 65 362 6812	05.14
09 65 362 6813	05.14
09 65 362 6815	05.20
09 65 362 6816	05.20
09 65 362 6817	05.20
09 65 362 7810	05.14
09 65 362 7811	05.14
09 65 362 7812	05.14
09 65 362 7813	05.14
09 65 362 7815	05.20
09 65 362 7816	05.20
09 65 362 7817	05.20
09 65 363 6810	05.14
09 65 363 6811	05.14
09 65 363 6812	05.14
09 65 363 6813	05.14
09 65 363 7810	05.14
09 65 363 7811	05.14
09 65 363 7812	05.14
09 65 363 7813	05.14
09 65 366 6810	05.180
09 65 366 6811	05.180
09 65 366 6812	05.180
09 65 366 6813	05.180
09 65 366 6815	05.182
09 65 366 6816	05.182
09 65 366 6817	05.182
09 65 366 7810	05.180
09 65 366 7811	05.180
09 65 366 7812	05.180
09 65 366 7813	05.180
09 65 366 7815	05.182
09 65 366 7816	05.182
09 65 366 7817	05.182
09 65 367 6810	05.180
09 65 367 6811	05.180
09 65 367 6812	05.180
09 65 367 6813	05.180

List of part numbers

Part number	Page
09 65 367 7810	05.180
09 65 367 7811	05.180
09 65 367 7812	05.180
09 65 367 7813	05.180
09 65 369 6711	05.178
09 65 369 6712	05.178
09 65 369 6713	05.178
09 65 369 7711	05.178
09 65 369 7712	05.178
09 65 369 7713	05.178
09 65 421 6701	05.08
09 65 421 6702	05.08
09 65 421 6703	05.08
09 65 421 7701	05.08
09 65 421 7702	05.08
09 65 421 7703	05.08
09 65 422 6800	05.16
09 65 422 6801	05.16
09 65 422 6802	05.16
09 65 422 6803	05.16
09 65 422 7800	05.16
09 65 422 7801	05.16
09 65 422 7802	05.16
09 65 422 7803	05.16
09 65 423 6800	05.16
09 65 423 6801	05.16
09 65 423 6802	05.16
09 65 423 6803	05.16
09 65 423 7800	05.16
09 65 423 7801	05.16
09 65 423 7802	05.16
09 65 423 7803	05.16
09 65 429 6701	05.178
09 65 429 6702	05.178
09 65 429 6703	05.178
09 65 429 7701	05.178
09 65 429 7702	05.178
09 65 429 7703	05.178
09 65 461 6711	05.08
09 65 461 6712	05.08
09 65 461 6713	05.08
09 65 461 7711	05.08
09 65 461 7712	05.08
09 65 461 7713	05.08
09 65 462 6810	05.14
09 65 462 6811	05.14
09 65 462 6812	05.14
09 65 462 6813	05.14
09 65 462 6815	05.20
09 65 462 6816	05.20
09 65 462 6817	05.20
09 65 462 7810	05.14
09 65 462 7811	05.14
09 65 462 7812	05.14
09 65 462 7813	05.14
09 65 462 7815	05.20
09 65 462 7816	05.20
09 65 462 7817	05.20
09 65 463 6810	05.14
09 65 463 6811	05.14
09 65 463 6812	05.14
09 65 463 6813	05.14
09 65 463 7810	05.14
09 65 463 7811	05.14
09 65 463 7812	05.14
09 65 463 7813	05.14
09 65 466 6810	05.180
09 65 466 6811	05.180
09 65 466 6812	05.180
09 65 466 6813	05.180
09 65 466 6815	05.182
09 65 466 6816	05.182
09 65 466 6817	05.182
09 65 466 7810	05.180
09 65 466 7811	05.180
09 65 466 7812	05.180
09 65 466 7813	05.180
09 65 466 7815	05.182
09 65 466 7816	05.182
09 65 466 7817	05.182
09 65 467 6810	05.180
09 65 467 6811	05.180
09 65 467 6812	05.180
09 65 467 6813	05.180
09 65 467 7810	05.180
09 65 467 7811	05.180
09 65 467 7812	05.180
09 65 467 7813	05.180
09 65 469 6711	05.178
09 65 469 6712	05.178
09 65 469 6713	05.178
09 65 469 7711	05.178
09 65 469 7712	05.178
09 65 469 7713	05.178
09 66 000 9972	05.167
09 66 000 9974	05.167
09 66 108 0001	05.32
09 66 111 6501	05.08
09 66 111 6502	05.08
09 66 111 6503	05.08
09 66 111 7501	05.08
09 66 111 7502	05.08
09 66 111 7503	05.08
09 66 112 6600	05.16
09 66 112 6601	05.16
09 66 112 6602	05.16
09 66 112 6603	05.16
09 66 112 7600	05.16
09 66 112 7601	05.16
09 66 112 7602	05.16
09 66 112 7603	05.16
09 66 113 6600	05.16
09 66 113 6601	05.16
09 66 113 6602	05.16
09 66 113 6603	05.16
09 66 113 7600	05.16
09 66 113 7601	05.16
09 66 113 7602	05.16
09 66 113 7603	05.16
09 66 114 6500	05.174
09 66 114 6501	05.174
09 66 114 6502	05.174
09 66 114 6503	05.174
09 66 114 6504	05.174
09 66 114 6505	05.174
09 66 114 6506	05.174
09 66 114 6507	05.174
09 66 114 7500	05.174
09 66 114 7501	05.174
09 66 114 7502	05.174
09 66 114 7503	05.174
09 66 114 7504	05.174
09 66 114 7505	05.174
09 66 114 7506	05.174
09 66 114 7507	05.174
09 66 115 6501	05.178
09 66 115 6502	05.178
09 66 115 6503	05.178
09 66 115 7501	05.178
09 66 115 7502	05.178
09 66 115 7503	05.178
09 66 118 6500	05.32
09 66 118 6501	05.32
09 66 118 6502	05.32
09 66 118 7500	05.32
09 66 118 7501	05.32
09 66 118 7502	05.32
09 66 121 6701	05.07
09 66 121 6702	05.07
09 66 121 6703	05.07
09 66 121 7701	05.07
09 66 121 7702	05.07
09 66 121 7703	05.07
09 66 122 6801	05.12
09 66 122 6802	05.12
09 66 122 6803	05.12
09 66 122 7801	05.12
09 66 122 7802	05.12
09 66 122 7803	05.12
09 66 123 6801	05.12
09 66 123 6802	05.12
09 66 123 6803	05.12
09 66 123 7801	05.12
09 66 123 7802	05.12
09 66 123 7803	05.12
09 66 124 6704	05.174
09 66 124 6705	05.174
09 66 124 6706	05.174
09 66 124 6707	05.174
09 66 124 7704	05.174
09 66 124 7705	05.174
09 66 124 7706	05.174
09 66 124 7707	05.174
09 66 128 6700	05.32
09 66 128 6701	05.32
09 66 128 6702	05.32
09 66 128 7700	05.32
09 66 128 7701	05.32
09 66 128 7702	05.32
09 66 151 6511	05.08
09 66 151 6512	05.08
09 66 151 6513	05.08
09 66 151 7511	05.08
09 66 151 7512	05.08
09 66 151 7513	05.08
09 66 152 6610	05.14
09 66 152 6611	05.14
09 66 152 6612	05.14
09 66 152 6613	05.14
09 66 152 6615	05.20
09 66 152 6616	05.20
09 66 152 6617	05.20
09 66 152 7610	05.14
09 66 152 7611	05.14
09 66 152 7612	05.14
09 66 152 7613	05.14
09 66 152 7615	05.20
09 66 152 7616	05.20
09 66 152 7617	05.20
09 66 153 6610	05.14
09 66 153 6611	05.14
09 66 153 6612	05.14
09 66 153 6613	05.14
09 66 153 7610	05.14
09 66 153 7611	05.14
09 66 153 7612	05.14
09 66 153 7613	05.14
09 66 154 6511	05.172
09 66 154 6512	05.172
09 66 154 6513	05.172
09 66 154 6515	05.172
09 66 154 6516	05.172
09 66 154 6517	05.172
09 66 154 7511	05.172
09 66 154 7512	05.172
09 66 154 7513	05.172
09 66 154 7515	05.172
09 66 154 7516	05.172
09 66 154 7517	05.172
09 66 155 6511	05.178
09 66 155 6512	05.178
09 66 155 6513	05.178
09 66 155 7511	05.178
09 66 155 7512	05.178
09 66 155 7513	05.178
09 66 156 6610	05.180
09 66 156 6611	05.180
09 66 156 6612	05.180
09 66 156 6613	05.180
09 66 156 6615	05.182
09 66 156 6616	05.182
09 66 156 6617	05.182
09 66 156 7610	05.180
09 66 156 7611	05.180
09 66 156 7612	05.180
09 66 156 7613	05.180
09 66 156 7615	05.182
09 66 156 7616	05.182
09 66 156 7617	05.182
09 66 157 6610	05.180
09 66 157 6611	05.180
09 66 157 6612	05.180
09 66 157 6613	05.180
09 66 157 7610	05.180
09 66 157 7611	05.180
09 66 157 7612	05.180
09 66 157 7613	05.180
09 66 162 6811	05.12
09 66 162 6812	05.12
09 66 162 6813	05.12
09 66 162 6815	05.18
09 66 162 6816	05.18
09 66 162 6817	05.18
09 66 162 7811	05.12
09 66 162 7812	05.12
09 66 162 7813	05.12
09 66 162 7815	05.18
09 66 162 7816	05.18
09 66 162 7817	05.18
09 66 163 6811	05.12
09 66 163 6812	05.12
09 66 163 6813	05.12
09 66 163 7811	05.12
09 66 163 7812	05.12
09 66 163 7813	05.12
09 66 164 6715	05.172
09 66 164 6716	05.172
09 66 164 6717	05.172
09 66 164 7715	05.172
09 66 164 7716	05.172
09 66 164 7717	05.172
09 66 208 0001	05.32
09 66 211 6501	05.08
09 66 211 6502	05.08
09 66 211 6503	05.08
09 66 211 7501	05.08
09 66 211 7502	05.08
09 66 211 7503	05.08

List of part numbers

Part number	Page
09 66 212 6600	05.16
09 66 212 6601	05.16
09 66 212 6602	05.16
09 66 212 6603	05.16
09 66 212 7600	05.16
09 66 212 7601	05.16
09 66 212 7602	05.16
09 66 212 7603	05.16
09 66 213 6600	05.16
09 66 213 6601	05.16
09 66 213 6602	05.16
09 66 213 6603	05.16
09 66 213 7600	05.16
09 66 213 7601	05.16
09 66 213 7602	05.16
09 66 213 7603	05.16
09 66 214 6500	05.174
09 66 214 6501	05.174
09 66 214 6502	05.174
09 66 214 6503	05.174
09 66 214 6504	05.174
09 66 214 6505	05.174
09 66 214 6506	05.174
09 66 214 6507	05.174
09 66 214 7500	05.174
09 66 214 7501	05.174
09 66 214 7502	05.174
09 66 214 7503	05.174
09 66 214 7504	05.174
09 66 214 7505	05.174
09 66 214 7506	05.174
09 66 214 7507	05.174
09 66 215 6501	05.178
09 66 215 6502	05.178
09 66 215 6503	05.178
09 66 215 7501	05.178
09 66 215 7502	05.178
09 66 215 7503	05.178
09 66 218 6500	05.32
09 66 218 6501	05.32
09 66 218 6502	05.32
09 66 218 7500	05.32
09 66 218 7501	05.32
09 66 218 7502	05.32
09 66 221 6701	05.07
09 66 221 6702	05.07
09 66 221 6703	05.07
09 66 221 7701	05.07
09 66 221 7702	05.07
09 66 221 7703	05.07
09 66 222 6801	05.12
09 66 222 6802	05.12
09 66 222 6803	05.12
09 66 222 7801	05.12
09 66 222 7802	05.12
09 66 222 7803	05.12
09 66 223 6801	05.12
09 66 223 6802	05.12
09 66 223 6803	05.12
09 66 223 7801	05.12
09 66 223 7802	05.12
09 66 223 7803	05.12
09 66 224 6704	05.174
09 66 224 6705	05.174
09 66 224 6706	05.174
09 66 224 6707	05.174
09 66 224 7704	05.174
09 66 224 7705	05.174
09 66 224 7706	05.174
09 66 224 7707	05.174
09 66 228 6700	05.32
09 66 228 6701	05.32
09 66 228 6702	05.32
09 66 228 7700	05.32
09 66 228 7701	05.32
09 66 228 7702	05.32
09 66 251 6511	05.08
09 66 251 6512	05.08
09 66 251 6513	05.08
09 66 251 7511	05.08
09 66 251 7512	05.08
09 66 251 7513	05.08
09 66 252 6610	05.14
09 66 252 6611	05.14
09 66 252 6612	05.14
09 66 252 6613	05.14
09 66 252 6615	05.20
09 66 252 6616	05.20
09 66 252 6617	05.20
09 66 252 7610	05.14
09 66 252 7611	05.14
09 66 252 7612	05.14
09 66 252 7613	05.14
09 66 252 7615	05.20
09 66 252 7616	05.20
09 66 252 7617	05.20
09 66 253 6610	05.14
09 66 253 6611	05.14
09 66 253 6612	05.14
09 66 253 6613	05.14
09 66 253 7610	05.14
09 66 253 7611	05.14
09 66 253 7612	05.14
09 66 253 7613	05.14
09 66 254 6511	05.172
09 66 254 6512	05.172
09 66 254 6513	05.172
09 66 254 6515	05.172
09 66 254 6516	05.172
09 66 254 6517	05.172
09 66 254 7511	05.172
09 66 254 7512	05.172
09 66 254 7513	05.172
09 66 254 7515	05.172
09 66 254 7516	05.172
09 66 254 7517	05.172
09 66 255 6511	05.178
09 66 255 6512	05.178
09 66 255 6513	05.178
09 66 255 7511	05.178
09 66 255 7512	05.178
09 66 255 7513	05.178
09 66 256 6610	05.180
09 66 256 6611	05.180
09 66 256 6612	05.180
09 66 256 6613	05.180
09 66 256 6615	05.182
09 66 256 6616	05.182
09 66 256 6617	05.182
09 66 256 7610	05.180
09 66 256 7611	05.180
09 66 256 7612	05.180
09 66 256 7613	05.180
09 66 256 7615	05.182
09 66 256 7616	05.182
09 66 256 7617	05.182
09 66 257 6610	05.180
09 66 257 6611	05.180
09 66 257 6612	05.180
09 66 257 6613	05.180
09 66 257 7610	05.180
09 66 257 7611	05.180
09 66 257 7612	05.180
09 66 257 7613	05.180
09 66 262 6811	05.12
09 66 262 6812	05.12
09 66 262 6813	05.12
09 66 262 6815	05.18
09 66 262 6816	05.18
09 66 262 6817	05.18
09 66 262 7811	05.12
09 66 262 7812	05.12
09 66 262 7813	05.12
09 66 262 7815	05.18
09 66 262 7816	05.18
09 66 262 7817	05.18
09 66 263 6811	05.12
09 66 263 6812	05.12
09 66 263 6813	05.12
09 66 263 7811	05.12
09 66 263 7812	05.12
09 66 263 7813	05.12
09 66 264 6715	05.172
09 66 264 6716	05.172
09 66 264 6717	05.172
09 66 264 7715	05.172
09 66 264 7716	05.172
09 66 264 7717	05.172
09 66 308 0001	05.32
09 66 311 6501	05.08
09 66 311 6502	05.08
09 66 311 6503	05.08
09 66 311 7501	05.08
09 66 311 7502	05.08
09 66 311 7503	05.08
09 66 312 6600	05.16
09 66 312 6601	05.16
09 66 312 6602	05.16
09 66 312 6603	05.16
09 66 312 7600	05.16
09 66 312 7601	05.16
09 66 312 7602	05.16
09 66 312 7603	05.16
09 66 313 6600	05.16
09 66 313 6601	05.16
09 66 313 6602	05.16
09 66 313 6603	05.16
09 66 313 7600	05.16
09 66 313 7601	05.16
09 66 313 7602	05.16
09 66 313 7603	05.16
09 66 314 6500	05.174
09 66 314 6501	05.174
09 66 314 6502	05.174
09 66 314 6503	05.174
09 66 314 6504	05.174
09 66 314 6505	05.174
09 66 314 6506	05.174
09 66 314 6507	05.174
09 66 314 7500	05.174
09 66 314 7501	05.174
09 66 314 7502	05.174
09 66 314 7503	05.174
09 66 314 7504	05.174
09 66 314 7505	05.174
09 66 314 7506	05.174
09 66 314 7507	05.174
09 66 315 6501	05.178
09 66 315 6502	05.178
09 66 315 6503	05.178
09 66 315 7501	05.178
09 66 315 7502	05.178
09 66 315 7503	05.178
09 66 318 6500	05.32
09 66 318 6501	05.32
09 66 318 6502	05.32
09 66 318 7500	05.32
09 66 318 7501	05.32
09 66 318 7502	05.32
09 66 321 6701	05.07
09 66 321 6702	05.07
09 66 321 6703	05.07
09 66 321 7701	05.07
09 66 321 7702	05.07
09 66 321 7703	05.07
09 66 322 6801	05.12
09 66 322 6802	05.12
09 66 322 6803	05.12
09 66 322 7801	05.12
09 66 322 7802	05.12
09 66 322 7803	05.12
09 66 323 6801	05.12
09 66 323 6802	05.12
09 66 323 6803	05.12
09 66 323 7801	05.12
09 66 323 7802	05.12
09 66 323 7803	05.12
09 66 324 6704	05.174
09 66 324 6705	05.174
09 66 324 6706	05.174
09 66 324 6707	05.174
09 66 324 7704	05.174
09 66 324 7705	05.174
09 66 324 7706	05.174
09 66 324 7707	05.174
09 66 328 6700	05.32
09 66 328 6701	05.32
09 66 328 6702	05.32
09 66 328 7700	05.32
09 66 328 7701	05.32
09 66 328 7702	05.32
09 66 351 6511	05.08
09 66 351 6512	05.08
09 66 351 6513	05.08
09 66 351 7511	05.08
09 66 351 7512	05.08
09 66 351 7513	05.08
09 66 352 6610	05.14
09 66 352 6611	05.14
09 66 352 6612	05.14
09 66 352 6613	05.14
09 66 352 6615	05.20
09 66 352 6616	05.20
09 66 352 6617	05.20
09 66 352 7610	05.14
09 66 352 7611	05.14
09 66 352 7612	05.14
09 66 352 7613	05.14
09 66 352 7615	05.20
09 66 352 7616	05.20
09 66 352 7617	05.20
09 66 353 6610	05.14
09 66 353 6611	05.14
09 66 353 6612	05.14
09 66 353 6613	05.14
09 66 353 7610	05.14
09 66 353 7611	05.14
09 66 353 7612	05.14
09 66 353 7613	05.14
09 66 354 6511	05.172
09 66 354 6512	05.172
09 66 354 6513	05.172

List of part numbers

Part number	Page
09 66 354 6515	05.172
09 66 354 6516	05.172
09 66 354 6517	05.172
09 66 354 7511	05.172
09 66 354 7512	05.172
09 66 354 7513	05.172
09 66 354 7515	05.172
09 66 354 7516	05.172
09 66 354 7517	05.172
09 66 355 6511	05.178
09 66 355 6512	05.178
09 66 355 6513	05.178
09 66 355 7511	05.178
09 66 355 7512	05.178
09 66 355 7513	05.178
09 66 356 6610	05.180
09 66 356 6611	05.180
09 66 356 6612	05.180
09 66 356 6613	05.180
09 66 356 6615	05.182
09 66 356 6616	05.182
09 66 356 6617	05.182
09 66 356 7610	05.180
09 66 356 7611	05.180
09 66 356 7612	05.180
09 66 356 7613	05.180
09 66 356 7615	05.182
09 66 356 7616	05.182
09 66 356 7617	05.182
09 66 357 6610	05.180
09 66 357 6611	05.180
09 66 357 6612	05.180
09 66 357 6613	05.180
09 66 357 7610	05.180
09 66 357 7611	05.180
09 66 357 7612	05.180
09 66 357 7613	05.180
09 66 362 6811	05.12
09 66 362 6812	05.12
09 66 362 6813	05.12
09 66 362 6815	05.18
09 66 362 6816	05.18
09 66 362 6817	05.18
09 66 362 7811	05.12
09 66 362 7812	05.12
09 66 362 7813	05.12
09 66 362 7815	05.18
09 66 362 7816	05.18
09 66 362 7817	05.18
09 66 363 6811	05.12
09 66 363 6812	05.12
09 66 363 6813	05.12
09 66 363 7811	05.12
09 66 363 7812	05.12
09 66 363 7813	05.12
09 66 364 6715	05.172
09 66 364 6716	05.172
09 66 364 6717	05.172
09 66 364 7715	05.172
09 66 364 7716	05.172
09 66 364 7717	05.172
09 66 408 0001	05.32
09 66 411 6501	05.08
09 66 411 6502	05.08
09 66 411 6503	05.08
09 66 411 7501	05.08
09 66 411 7502	05.08
09 66 411 7503	05.08
09 66 412 6600	05.16
09 66 412 6601	05.16
09 66 412 6602	05.16
09 66 412 6603	05.16
09 66 412 7600	05.16
09 66 412 7601	05.16
09 66 412 7602	05.16
09 66 412 7603	05.16
09 66 413 6600	05.16
09 66 413 6601	05.16
09 66 413 6602	05.16
09 66 413 6603	05.16
09 66 413 7600	05.16
09 66 413 7601	05.16
09 66 413 7602	05.16
09 66 413 7603	05.16
09 66 414 6500	05.174
09 66 414 6501	05.174
09 66 414 6502	05.174
09 66 414 6503	05.174
09 66 414 6504	05.174
09 66 414 6505	05.174
09 66 414 6506	05.174
09 66 414 6507	05.174
09 66 414 7500	05.174
09 66 414 7501	05.174
09 66 414 7502	05.174
09 66 414 7503	05.174
09 66 414 7504	05.174
09 66 414 7505	05.174
09 66 414 7506	05.174
09 66 414 7507	05.174
09 66 415 6501	05.178
09 66 415 6502	05.178
09 66 415 6503	05.178
09 66 415 7501	05.178
09 66 415 7502	05.178
09 66 415 7503	05.178
09 66 418 6500	05.32
09 66 418 6501	05.32
09 66 418 6502	05.32
09 66 418 7500	05.32
09 66 418 7501	05.32
09 66 418 7502	05.32
09 66 421 6701	05.07
09 66 421 6702	05.07
09 66 421 6703	05.07
09 66 421 7701	05.07
09 66 421 7702	05.07
09 66 421 7703	05.07
09 66 422 6801	05.12
09 66 422 6802	05.12
09 66 422 6803	05.12
09 66 422 7801	05.12
09 66 422 7802	05.12
09 66 422 7803	05.12
09 66 423 6801	05.12
09 66 423 6802	05.12
09 66 423 6803	05.12
09 66 423 7801	05.12
09 66 423 7802	05.12
09 66 423 7803	05.12
09 66 428 6700	05.32
09 66 428 6701	05.32
09 66 428 6702	05.32
09 66 428 7700	05.32
09 66 428 7701	05.32
09 66 428 7702	05.32
09 66 451 6511	05.08
09 66 451 6512	05.08
09 66 451 6513	05.08
09 66 451 7511	05.08
09 66 451 7512	05.08
09 66 451 7513	05.08
09 66 452 6610	05.14
09 66 452 6611	05.14
09 66 452 6612	05.14
09 66 452 6613	05.14
09 66 452 6615	05.20
09 66 452 6616	05.20
09 66 452 6617	05.20
09 66 452 7610	05.14
09 66 452 7611	05.14
09 66 452 7612	05.14
09 66 452 7613	05.14
09 66 452 7615	05.20
09 66 452 7616	05.20
09 66 452 7617	05.20
09 66 453 6610	05.14
09 66 453 6611	05.14
09 66 453 6612	05.14
09 66 453 6613	05.14
09 66 453 7610	05.14
09 66 453 7611	05.14
09 66 453 7612	05.14
09 66 453 7613	05.14
09 66 454 6511	05.172
09 66 454 6512	05.172
09 66 454 6513	05.172
09 66 454 6515	05.172
09 66 454 6516	05.172
09 66 454 6517	05.172
09 66 454 7511	05.172
09 66 454 7512	05.172
09 66 454 7513	05.172
09 66 454 7515	05.172
09 66 454 7516	05.172
09 66 454 7517	05.172
09 66 455 6511	05.178
09 66 455 6512	05.178
09 66 455 6513	05.178
09 66 455 7511	05.178
09 66 455 7512	05.178
09 66 455 7513	05.178
09 66 456 6610	05.180
09 66 456 6611	05.180
09 66 456 6612	05.180
09 66 456 6613	05.180
09 66 456 6615	05.182
09 66 456 6616	05.182
09 66 456 6617	05.182
09 66 456 7610	05.180
09 66 456 7611	05.180
09 66 456 7612	05.180
09 66 456 7613	05.180
09 66 456 7615	05.182
09 66 456 7616	05.182
09 66 456 7617	05.182
09 66 457 6610	05.180
09 66 457 6611	05.180
09 66 457 6612	05.180
09 66 457 6613	05.180
09 66 457 7610	05.180
09 66 457 7611	05.180
09 66 457 7612	05.180
09 66 457 7613	05.180
09 66 462 6811	05.12
09 66 462 6812	05.12
09 66 462 6813	05.12
09 66 462 6815	05.18
09 66 462 6816	05.18
09 66 462 6817	05.18
09 66 462 7811	05.12
09 66 462 7812	05.12
09 66 462 7813	05.12
09 66 462 7815	05.18
09 66 462 7816	05.18
09 66 462 7817	05.18
09 66 463 6811	05.12
09 66 463 6812	05.12
09 66 463 6813	05.12
09 66 463 7811	05.12
09 66 463 7812	05.12
09 66 463 7813	05.12
09 66 511 6501	05.08
09 66 511 6502	05.08
09 66 511 6503	05.08
09 66 511 7501	05.08
09 66 511 7502	05.08
09 66 511 7503	05.08
09 66 512 6600	05.16
09 66 512 6601	05.16
09 66 512 6602	05.16
09 66 512 6603	05.16
09 66 512 7600	05.16
09 66 512 7601	05.16
09 66 512 7602	05.16
09 66 512 7603	05.16
09 66 514 6500	05.174
09 66 514 6501	05.174
09 66 514 6502	05.174
09 66 514 6503	05.174
09 66 514 7500	05.174
09 66 514 7501	05.174
09 66 514 7502	05.174
09 66 514 7503	05.174
09 66 521 6701	05.07
09 66 521 6702	05.07
09 66 521 6703	05.07
09 66 521 7701	05.07
09 66 521 7702	05.07
09 66 521 7703	05.07
09 66 522 6801	05.12
09 66 522 6802	05.12
09 66 522 6803	05.12
09 66 522 7801	05.12
09 66 522 7802	05.12
09 66 522 7803	05.12
09 66 523 6801	05.12
09 66 523 6802	05.12
09 66 523 6803	05.12
09 66 523 7801	05.12
09 66 523 7802	05.12
09 66 523 7803	05.12
09 66 552 6610	05.14
09 66 552 6611	05.14
09 66 552 6612	05.14
09 66 552 6613	05.14
09 66 552 6615	05.20
09 66 552 6616	05.20
09 66 552 6617	05.20
09 66 552 7610	05.14
09 66 552 7611	05.14
09 66 552 7612	05.14
09 66 552 7613	05.14
09 66 552 7615	05.20
09 66 552 7616	05.20
09 66 552 7617	05.20
09 66 554 6511	05.172
09 66 554 6512	05.172
09 66 554 6513	05.172
09 66 554 7511	05.172
09 66 554 7512	05.172
09 66 554 7513	05.172

List of part numbers

Part number	Page
09 66 562 6811	05.12
09 66 562 6812	05.12
09 66 562 6813	05.12
09 66 562 6815	05.18
09 66 562 6816	05.18
09 66 562 6817	05.18
09 66 562 7811	05.12
09 66 562 7812	05.12
09 66 562 7813	05.12
09 66 562 7815	05.18
09 66 562 7816	05.18
09 66 562 7817	05.18
09 66 563 6811	05.12
09 66 563 6812	05.12
09 66 563 6813	05.12
09 66 563 7811	05.12
09 66 563 7812	05.12
09 66 563 7813	05.12
09 67 000 3476	02.21
09 67 000 3476	02.60
09 67 000 3476	03.54
09 67 000 3476	03.76
09 67 000 3476	03.103
09 67 000 3476	05.27
09 67 000 3476	05.70
09 67 000 3576	02.22
09 67 000 3576	02.58
09 67 000 3576	03.54
09 67 000 3576	03.76
09 67 000 3576	03.103
09 67 000 3576	03.122
09 67 000 3576	05.27
09 67 000 3576	05.70
09 67 000 3676	05.27
09 67 000 3676	05.70
09 67 000 5476	03.54
09 67 000 5476	03.76
09 67 000 5476	03.103
09 67 000 5476	05.27
09 67 000 5476	05.70
09 67 000 5576	03.54
09 67 000 5576	03.76
09 67 000 5576	03.103
09 67 000 5576	03.122
09 67 000 5576	05.27
09 67 000 5576	05.70
09 67 000 5676	05.27
09 67 000 5676	05.70
09 67 000 7136	05.28
09 67 000 7137	05.28
09 67 000 7138	05.28
09 67 000 7146	05.28
09 67 000 7147	05.28
09 67 000 7148	05.28
09 67 000 7156	05.28
09 67 000 7157	05.28
09 67 000 7158	05.28
09 67 000 7166	05.28
09 67 000 7167	05.28
09 67 000 7168	05.28
09 67 000 7176	05.28
09 67 000 7177	05.28
09 67 000 7178	05.28
09 67 000 7236	05.30
09 67 000 7237	05.30
09 67 000 7238	05.30
09 67 000 7246	05.30
09 67 000 7247	05.30
09 67 000 7248	05.30
09 67 000 7256	05.30
09 67 000 7257	05.30
09 67 000 7258	05.30
09 67 000 7266	05.30
09 67 000 7267	05.30
09 67 000 7268	05.30
09 67 000 7276	05.30
09 67 000 7277	05.30
09 67 000 7278	05.30
09 67 000 7476	03.54
09 67 000 7476	03.76
09 67 000 7476	03.103
09 67 000 7476	05.27
09 67 000 7476	05.70
09 67 000 7576	03.54
09 67 000 7576	03.76
09 67 000 7576	03.103
09 67 000 7576	03.122
09 67 000 7576	05.27
09 67 000 7576	05.70
09 67 000 7676	05.27
09 67 000 7676	05.70
09 67 000 8136	05.28
09 67 000 8137	05.28
09 67 000 8138	05.28
09 67 000 8146	05.28
09 67 000 8147	05.28
09 67 000 8148	05.28
09 67 000 8156	05.28
09 67 000 8157	05.28
09 67 000 8158	05.28
09 67 000 8166	05.28
09 67 000 8167	05.28
09 67 000 8168	05.28
09 67 000 8176	05.28
09 67 000 8177	05.28
09 67 000 8178	02.22
09 67 000 8178	02.58
09 67 000 8178	05.28
09 67 000 8236	05.30
09 67 000 8237	05.30
09 67 000 8238	05.30
09 67 000 8246	05.30
09 67 000 8247	05.30
09 67 000 8248	05.30
09 67 000 8256	05.30
09 67 000 8257	05.30
09 67 000 8258	05.30
09 67 000 8266	05.30
09 67 000 8267	05.30
09 67 000 8268	05.30
09 67 000 8276	05.30
09 67 000 8277	05.30
09 67 000 8278	02.21
09 67 000 8278	02.60
09 67 000 8278	05.30
09 67 000 8476	02.21
09 67 000 8476	02.60
09 67 000 8476	03.54
09 67 000 8476	03.76
09 67 000 8476	03.103
09 67 000 8476	05.27
09 67 000 8476	05.70
09 67 000 8576	02.22
09 67 000 8576	02.58
09 67 000 8576	03.54
09 67 000 8576	03.76
09 67 000 8576	03.103
09 67 000 8576	03.122
09 67 000 8576	05.27
09 67 000 8576	05.70
09 67 000 8676	05.27
09 67 000 8676	05.70
09 67 000 9907	05.159
09 67 000 9914	05.159
09 67 000 9915	05.159
09 67 000 9916	05.159
09 67 000 9917	05.159
09 67 000 9918	05.159
09 67 000 9922	05.168
09 67 000 9924	05.168
09 67 000 9925	05.147
09 67 000 9930	05.147
09 67 000 9971	05.146
09 67 000 9972	05.167
09 67 000 9973	05.168
09 67 000 9974	05.167
09 67 001 9928	05.168
09 67 001 9941	05.167
09 67 001 9954	05.167
09 67 001 9957	05.167
09 67 001 9961	05.144
09 67 001 9965	05.146
09 67 001 9968	05.145
09 67 001 9969	05.168
09 67 001 9970	05.168
09 67 001 9971	05.159
09 67 001 9972	05.159
09 67 001 9973	05.159
09 67 001 9974	05.167
09 67 001 9976	05.167
09 67 001 9977	05.146
09 67 001 9978	05.146
09 67 001 9979	05.144
09 67 001 9980	05.145
09 67 001 9981	05.145
09 67 001 9985	05.168
09 67 001 9997	05.149
09 67 002 9001	05.137
09 67 002 9002	05.137
09 67 002 9003	05.137
09 67 002 9006	05.137
09 67 002 9007	05.137
09 67 002 9008	05.139
09 67 002 9009	05.139
09 67 002 9010	05.139
09 67 002 9011	05.139
09 67 002 9012	05.139
09 67 002 9013	05.139
09 67 002 9017	05.162
09 67 002 9018	05.162
09 67 002 9019	05.162
09 67 002 9020	05.162
09 67 002 9121 xx1	05.161
09 67 002 9121 xx2	05.161
09 67 002 9121 xx3	05.161
09 67 002 9121 xx4	05.161
09 67 002 9122 xx1	05.161
09 67 002 9122 xx2	05.161
09 67 002 9122 xx3	05.161
09 67 002 9122 xx4	05.161
09 67 002 9024	05.144
09 67 002 9028	05.149
09 67 002 9029	05.149
09 67 002 9030	05.168
09 67 002 9031	05.152
09 67 002 9032	05.152
09 67 002 9040	05.152
09 67 002 9041	05.152
09 67 002 9042	05.152
09 67 002 9044	05.152
09 67 002 9045	05.152
09 67 002 9050	05.137
09 67 002 9051	05.137
09 67 002 9052	05.137
09 67 002 9055	05.137
09 67 002 9056	05.137
09 67 002 9057	05.137
09 67 002 9060	05.137
09 67 002 9061	05.137
09 67 002 9062	05.137
09 67 002 9065	05.137
09 67 002 9066	05.137
09 67 002 9067	05.137
09 67 002 9075	05.145
09 67 002 9078	05.144
09 67 002 9081	05.144
09 67 002 9090	05.150
09 67 002 9091	05.150
09 67 002 9092	05.149
09 67 002 9094	05.149
09 67 002 9101	05.149
09 67 002 9102	05.144
09 67 002 9102	05.145
09 67 002 9103	05.144
09 67 002 9103	05.145
09 67 002 9104	05.144
09 67 002 9104	05.145
09 67 002 9105	05.145
09 67 002 9106	05.144
09 67 002 9119	05.145
09 67 002 9120	05.168
09 67 002 9123	05.161
09 67 002 9124	05.161
09 67 002 9125	05.161
09 67 002 9126	05.161
09 67 002 9129	05.161
09 67 002 9150	05.145
09 67 002 9151	05.145
09 67 002 9152	05.144
09 67 002 9161	05.145
09 67 002 9162	05.144
09 67 002 9163	05.144
09 67 002 9930	05.161
09 67 002 9931	05.161
09 67 002 9932	05.161
09 67 002 9933	05.161
09 67 002 9934	05.161
09 67 002 9935	05.161
09 67 002 9936	05.161
09 67 009 0320	05.151
09 67 009 0321	05.151
09 67 009 0322	05.152
09 67 009 0323	05.152
09 67 009 0333	05.149
09 67 009 0334	05.150
09 67 009 0335	05.150
09 67 009 0336	05.149
09 67 009 0338	05.151
09 67 009 0339	05.151
09 67 009 0343	05.149
09 67 009 0344	05.150
09 67 009 0348	05.149
09 67 009 0349	05.150
09 67 009 0411	05.157
09 67 009 0413	05.157
09 67 009 0421	05.147
09 67 009 0422	05.147
09 67 009 0423	05.147
09 67 009 0424	05.142
09 67 009 0424	05.144
09 67 009 0424	05.145
09 67 009 0425	05.142
09 67 009 0425	05.144
09 67 009 0425	05.145
09 67 009 0426	05.142
09 67 009 0426	05.144
09 67 009 0426	05.145
09 67 009 0427	05.142
09 67 009 0427	05.144
09 67 009 0427	05.145
09 67 009 0430	05.142
09 67 009 0430	05.144
09 67 009 0430	05.145
09 67 009 0431	05.142
09 67 009 0431	05.144
09 67 009 0431	05.145
09 67 009 0434	05.142
09 67 009 0434	05.144
09 67 009 0434	05.145
09 67 009 0435	05.142
09 67 009 0435	05.144
09 67 009 0435	05.145
09 67 009 0436	05.138
09 67 009 0437	05.138
09 67 009 0438	05.136
09 67 009 0439	05.136
09 67 009 0442	05.147
09 67 009 0443	05.147
09 67 009 0446	05.148
09 67 009 0448	05.148
09 67 009 0452	05.157
09 67 009 0453	05.157
09 67 009 0462	05.143
09 67 009 0462	05.144
09 67 009 0462	05.145
09 67 009 0463	05.143
09 67 009 0463	05.144
09 67 009 0463	05.145
09 67 009 0464	05.143
09 67 009 0464	05.144
09 67 009 0464	05.145
09 67 009 0465	05.143
09 67 009 0465	05.144
09 67 009 0465	05.145
09 67 009 0511	05.157
09 67 009 0513	05.157

List of part numbers

Part number	Page
09 67 009 0538	05.136
09 67 009 0539	05.136
09 67 009 0571	05.146
09 67 009 0573	05.146
09 67 009 0605	05.36
09 67 009 0611	05.169
09 67 009 0612	05.169
09 67 009 0613	05.169
09 67 009 0614	05.170
09 67 009 0615	05.170
09 67 009 0711	05.169
09 67 009 0712	05.169
09 67 009 0713	05.169
09 67 009 0714	05.170
09 67 009 0715	05.170
09 67 009 4701	05.26
09 67 009 4704	05.34
09 67 009 4715	05.34
09 67 009 4754	05.06
09 67 009 4755	05.06
09 67 009 5601	05.26
09 67 009 5604	05.34
09 67 009 5615	05.34
09 67 009 5654	05.06
09 67 009 5655	05.06
09 67 015 0320	05.151
09 67 015 0321	05.151
09 67 015 0322	05.152
09 67 015 0323	05.152
09 67 015 0333	05.149
09 67 015 0334	05.150
09 67 015 0335	05.150
09 67 015 0336	05.149
09 67 015 0338	05.151
09 67 015 0339	05.151
09 67 015 0343	05.149
09 67 015 0344	05.150
09 67 015 0348	05.149
09 67 015 0349	05.150
09 67 015 0411	05.157
09 67 015 0413	05.157
09 67 015 0421	05.147
09 67 015 0422	05.147
09 67 015 0423	05.147
09 67 015 0424	05.142
09 67 015 0424	05.144
09 67 015 0424	05.145
09 67 015 0425	05.142
09 67 015 0425	05.144
09 67 015 0425	05.145
09 67 015 0426	05.142
09 67 015 0426	05.144
09 67 015 0426	05.145
09 67 015 0427	05.142
09 67 015 0427	05.144
09 67 015 0427	05.145
09 67 015 0430	05.142
09 67 015 0430	05.144
09 67 015 0430	05.145
09 67 015 0431	05.142
09 67 015 0431	05.144
09 67 015 0431	05.145
09 67 015 0434	05.142
09 67 015 0434	05.144
09 67 015 0434	05.145
09 67 015 0435	05.142
09 67 015 0435	05.144
09 67 015 0435	05.145
09 67 015 0436	05.138
09 67 015 0437	05.138
09 67 015 0438	05.136
09 67 015 0439	05.136
09 67 015 0442	05.147
09 67 015 0443	05.147
09 67 015 0446	05.148
09 67 015 0448	05.148
09 67 015 0452	05.157
09 67 015 0453	05.157
09 67 015 0462	05.143
09 67 015 0462	05.144
09 67 015 0462	05.145
09 67 015 0463	05.143
09 67 015 0463	05.144
09 67 015 0463	05.145
09 67 015 0464	05.143
09 67 015 0464	05.144
09 67 015 0464	05.145
09 67 015 0465	05.143
09 67 015 0465	05.144
09 67 015 0465	05.145
09 67 015 0511	05.157
09 67 015 0513	05.157
09 67 015 0538	05.136
09 67 015 0539	05.136
09 67 015 0571	05.146
09 67 015 0573	05.146
09 67 015 0605	05.36
09 67 015 0611	05.169
09 67 015 0612	05.169
09 67 015 0613	05.169
09 67 015 0614	05.170
09 67 015 0615	05.170
09 67 015 0711	05.169
09 67 015 0712	05.169
09 67 015 0713	05.169
09 67 015 0714	05.170
09 67 015 0715	05.170
09 67 015 4701	05.26
09 67 015 4704	05.34
09 67 015 4715	05.34
09 67 015 4754	05.06
09 67 015 4755	05.06
09 67 015 5601	05.26
09 67 015 5604	05.34
09 67 015 5615	05.34
09 67 015 5654	05.06
09 67 015 5655	05.06
09 67 025 0320	05.151
09 67 025 0321	05.151
09 67 025 0322	05.152
09 67 025 0323	05.152
09 67 025 0333	05.149
09 67 025 0334	05.150
09 67 025 0335	05.150
09 67 025 0336	05.149
09 67 025 0338	05.151
09 67 025 0339	05.151
09 67 025 0343	05.149
09 67 025 0344	05.150
09 67 025 0348	05.149
09 67 025 0349	05.150
09 67 025 0411	05.157
09 67 025 0413	05.157
09 67 025 0421	05.147
09 67 025 0422	05.147
09 67 025 0423	05.147
09 67 025 0424	05.142
09 67 025 0424	05.144
09 67 025 0424	05.145
09 67 025 0425	05.142
09 67 025 0425	05.144
09 67 025 0425	05.145
09 67 025 0426	05.142
09 67 025 0426	05.144
09 67 025 0426	05.145
09 67 025 0427	05.142
09 67 025 0427	05.144
09 67 025 0427	05.145
09 67 025 0430	05.142
09 67 025 0430	05.144
09 67 025 0430	05.145
09 67 025 0431	05.142
09 67 025 0431	05.144
09 67 025 0431	05.145
09 67 025 0434	05.142
09 67 025 0434	05.144
09 67 025 0434	05.145
09 67 025 0435	05.142
09 67 025 0435	05.144
09 67 025 0435	05.145
09 67 025 0436	05.138
09 67 025 0437	05.138
09 67 025 0438	05.136
09 67 025 0439	05.136
09 67 025 0442	05.147
09 67 025 0443	05.147
09 67 025 0446	05.148
09 67 025 0448	05.148
09 67 025 0452	05.157
09 67 025 0453	05.157
09 67 025 0462	05.143
09 67 025 0462	05.144
09 67 025 0462	05.145
09 67 025 0463	05.143
09 67 025 0463	05.144
09 67 025 0463	05.145
09 67 025 0464	05.143
09 67 025 0464	05.144
09 67 025 0464	05.145
09 67 025 0465	05.143
09 67 025 0465	05.144
09 67 025 0465	05.145
09 67 025 0511	05.157
09 67 025 0513	05.157
09 67 025 0538	05.136
09 67 025 0539	05.136
09 67 025 0571	05.146
09 67 025 0573	05.146
09 67 025 0605	05.36
09 67 025 0611	05.169
09 67 025 0612	05.169
09 67 025 0613	05.169
09 67 025 0614	05.170
09 67 025 0615	05.170
09 67 025 0711	05.169
09 67 025 0712	05.169
09 67 025 0713	05.169
09 67 025 0714	05.170
09 67 025 0715	05.170
09 67 025 4701	05.26
09 67 025 4704	05.34
09 67 025 4715	05.34
09 67 025 4754	05.06
09 67 025 4755	05.06
09 67 025 5601	05.26
09 67 025 5604	05.34
09 67 025 5615	05.34
09 67 025 5654	05.06
09 67 025 5655	05.06
09 67 037 0320	05.151
09 67 037 0321	05.151
09 67 037 0322	05.152
09 67 037 0323	05.152
09 67 037 0333	05.149
09 67 037 0334	05.150
09 67 037 0335	05.150
09 67 037 0336	05.149
09 67 037 0338	05.151
09 67 037 0339	05.151
09 67 037 0343	05.149
09 67 037 0344	05.150
09 67 037 0348	05.149
09 67 037 0349	05.150
09 67 037 0411	05.157
09 67 037 0413	05.157
09 67 037 0421	05.147
09 67 037 0422	05.147
09 67 037 0423	05.147
09 67 037 0424	05.142
09 67 037 0424	05.144
09 67 037 0424	05.145
09 67 037 0425	05.142
09 67 037 0425	05.144
09 67 037 0425	05.145
09 67 037 0426	05.142
09 67 037 0426	05.144
09 67 037 0426	05.145
09 67 037 0427	05.142
09 67 037 0427	05.144
09 67 037 0427	05.145
09 67 037 0434	05.142
09 67 037 0434	05.144
09 67 037 0434	05.145
09 67 037 0435	05.142
09 67 037 0435	05.144
09 67 037 0435	05.145
09 67 037 0438	05.136
09 67 037 0439	05.136
09 67 037 0442	05.147
09 67 037 0443	05.147
09 67 037 0446	05.148
09 67 037 0448	05.148
09 67 037 0452	05.157
09 67 037 0453	05.157
09 67 037 0462	05.143
09 67 037 0462	05.144
09 67 037 0462	05.145
09 67 037 0463	05.143
09 67 037 0463	05.144
09 67 037 0463	05.145
09 67 037 0464	05.143
09 67 037 0464	05.144
09 67 037 0464	05.145
09 67 037 0465	05.143
09 67 037 0465	05.144
09 67 037 0465	05.145
09 67 037 0511	05.157
09 67 037 0513	05.157
09 67 037 0538	05.136
09 67 037 0539	05.136
09 67 037 0571	05.146
09 67 037 0573	05.146
09 67 037 0605	05.36
09 67 037 0611	05.169
09 67 037 0612	05.169
09 67 037 0613	05.169
09 67 037 0614	05.170
09 67 037 0615	05.170
09 67 037 0711	05.169
09 67 037 0712	05.169
09 67 037 0713	05.169
09 67 037 0714	05.170
09 67 037 0715	05.170
09 67 037 4701	05.26
09 67 037 4704	05.34
09 67 037 4715	05.34
09 67 037 4754	05.06
09 67 037 4755	05.06
09 67 037 5601	05.26
09 67 037 5604	05.34
09 67 037 5615	05.34
09 67 037 5654	05.06
09 67 037 5655	05.06
09 67 050 0320	05.151
09 67 050 0321	05.151
09 67 050 0322	05.152
09 67 050 0323	05.152
09 67 050 0333	05.149
09 67 050 0334	05.150
09 67 050 0335	05.150
09 67 050 0336	05.149
09 67 050 0338	05.151
09 67 050 0339	05.151
09 67 050 0343	05.149
09 67 050 0344	05.150
09 67 050 0348	05.149
09 67 050 0349	05.150
09 67 050 0411	05.157
09 67 050 0413	05.157
09 67 050 0423	05.147
09 67 050 0424	05.142
09 67 050 0424	05.144
09 67 050 0424	05.145
09 67 050 0426	05.142
09 67 050 0426	05.144
09 67 050 0426	05.145
09 67 050 0438	05.136
09 67 050 0439	05.136
09 67 050 0442	05.147
09 67 050 0443	05.147
09 67 050 0446	05.148
09 67 050 0448	05.148
09 67 050 0452	05.157
09 67 050 0453	05.157
09 67 050 0511	05.157
09 67 050 0513	05.157
09 67 050 0538	05.136
09 67 050 0539	05.136
09 67 050 0571	05.146
09 67 050 0573	05.146
09 67 050 0612	05.169

List of part numbers

Part number	Page
09 67 050 0613	05.169
09 67 050 0614	05.170
09 67 050 0615	05.170
09 67 050 0712	05.169
09 67 050 0713	05.169
09 67 050 0714	05.170
09 67 050 0715	05.170
09 67 050 4701	05.26
09 67 050 4704	05.34
09 67 050 4715	05.34
09 67 050 4754	05.06
09 67 050 4755	05.06
09 67 050 5601	05.26
09 67 050 5604	05.34
09 67 050 5615	05.34
09 67 050 5654	05.06
09 67 050 5655	05.06
09 67 209 4704	05.34
09 67 209 4715	05.34
09 67 209 5604	05.34
09 67 209 5615	05.34
09 67 215 4704	05.34
09 67 215 4715	05.34
09 67 215 5604	05.34
09 67 215 5615	05.34
09 67 225 4704	05.34
09 67 225 4715	05.34
09 67 225 5604	05.34
09 67 225 5615	05.34
09 67 237 4704	05.34
09 67 237 4715	05.34
09 67 237 5604	05.34
09 67 237 5615	05.34
09 67 250 4704	05.34
09 67 250 4715	05.34
09 67 250 5604	05.34
09 67 250 5615	05.34
09 67 409 4715	05.118
09 67 409 5615	05.118
09 67 415 4715	05.118
09 67 415 5615	05.118
09 67 425 4715	05.118
09 67 425 5615	05.118
09 67 437 4715	05.118
09 67 437 5615	05.118
09 67 450 4715	05.118
09 67 450 5615	05.118
09 67 509 6715	05.120
09 67 509 6758	05.132
09 67 509 6775	05.128
09 67 509 7615	05.120
09 67 509 7658	05.132
09 67 509 7675	05.128
09 67 509 8715	05.120
09 67 509 8758	05.132
09 67 509 8775	05.128
09 67 509 9615	05.120
09 67 509 9658	05.132
09 67 509 9675	05.128
09 67 515 6715	05.120
09 67 515 6758	05.132
09 67 515 6775	05.128
09 67 515 7615	05.120
09 67 515 7658	05.132
09 67 515 7675	05.128
09 67 515 8715	05.120
09 67 515 8758	05.132
09 67 515 8775	05.128
09 67 515 9615	05.120
09 67 515 9658	05.132
09 67 515 9675	05.128
09 67 525 6715	05.120
09 67 525 6758	05.132
09 67 525 6775	05.128
09 67 525 7615	05.120
09 67 525 7658	05.132
09 67 525 7675	05.128
09 67 525 8715	05.120
09 67 525 8758	05.132
09 67 525 8775	05.128
09 67 525 9615	05.120
09 67 525 9658	05.132
09 67 525 9675	05.128
09 67 609 6715	05.124
09 67 609 6758	05.134
09 67 609 6775	05.130
09 67 609 7615	05.124
09 67 609 7658	05.134
09 67 609 7675	05.130
09 67 609 8715	05.124
09 67 609 8758	05.134
09 67 609 8775	05.130
09 67 609 9615	05.124
09 67 609 9658	05.134
09 67 609 9675	05.130
09 67 615 6715	05.124
09 67 615 6758	05.134
09 67 615 6775	05.130
09 67 615 7615	05.124
09 67 615 7658	05.134
09 67 615 7675	05.130
09 67 615 8715	05.124
09 67 615 8758	05.134
09 67 615 8775	05.130
09 67 615 9615	05.124
09 67 615 9658	05.134
09 67 615 9675	05.130
09 67 625 6715	05.124
09 67 625 6758	05.134
09 67 625 6775	05.130
09 67 625 7615	05.124
09 67 625 7658	05.134
09 67 625 7675	05.130
09 67 625 8715	05.124
09 67 625 8758	05.134
09 67 625 8775	05.130
09 67 625 9615	05.124
09 67 625 9658	05.134
09 67 625 9675	05.130
09 67 637 6715	05.124
09 67 637 6758	05.134
09 67 637 6775	05.130
09 67 637 7615	05.124
09 67 637 7658	05.134
09 67 637 7675	05.130
09 67 637 8715	05.124
09 67 637 8758	05.134
09 67 637 8775	05.130
09 67 637 9615	05.124
09 67 637 9658	05.134
09 67 637 9675	05.130
09 67 650 6715	05.124
09 67 650 6758	05.134
09 67 650 6775	05.130
09 67 650 7615	05.124
09 67 650 7658	05.134
09 67 650 7675	05.130
09 67 650 8715	05.124
09 67 650 8758	05.134
09 67 650 8775	05.130
09 67 650 9615	05.124
09 67 650 9658	05.134
09 67 650 9675	05.130
09 67 709 6715	05.122
09 67 709 7615	05.122
09 67 709 8715	05.122
09 67 709 9615	05.122
09 67 715 6715	05.122
09 67 715 7615	05.122
09 67 715 8715	05.122
09 67 715 9615	05.122
09 67 725 6715	05.122
09 67 725 7615	05.122
09 67 725 8715	05.122
09 67 725 9615	05.122
09 67 809 6715	05.126
09 67 809 7615	05.126
09 67 809 8715	05.126
09 67 809 9615	05.126
09 67 815 6715	05.126
09 67 815 7615	05.126
09 67 815 8715	05.126
09 67 815 9615	05.126
09 67 825 6715	05.126
09 67 825 7615	05.126
09 67 825 8715	05.126
09 67 825 9615	05.126
09 67 837 6715	05.126
09 67 837 7615	05.126
09 67 837 8715	05.126
09 67 837 9615	05.126
09 67 850 6715	05.126
09 67 850 7615	05.126
09 67 850 8715	05.126
09 67 850 9615	05.126
09 68 153 5611	05.22
09 68 153 5612	05.22
09 68 153 5613	05.22
09 68 153 7611	05.22
09 68 153 7612	05.22
09 68 153 7613	05.22
09 68 163 5811	05.22
09 68 163 5812	05.22
09 68 163 5813	05.22
09 68 163 7811	05.22
09 68 163 7812	05.22
09 68 163 7813	05.22
09 68 253 5611	05.22
09 68 253 5612	05.22
09 68 253 5613	05.22
09 68 253 7611	05.22
09 68 253 7612	05.22
09 68 253 7613	05.22
09 68 263 5811	05.22
09 68 263 5812	05.22
09 68 263 5813	05.22
09 68 263 7811	05.22
09 68 263 7812	05.22
09 68 263 7813	05.22
09 68 353 5611	05.22
09 68 353 5612	05.22
09 68 353 5613	05.22
09 68 353 7611	05.22
09 68 353 7612	05.22
09 68 353 7613	05.22
09 68 363 5811	05.22
09 68 363 5812	05.22
09 68 363 5813	05.22
09 68 363 7811	05.22
09 68 363 7812	05.22
09 68 363 7813	05.22
09 68 453 5611	05.22
09 68 453 5612	05.22
09 68 453 5613	05.22
09 68 453 7611	05.22
09 68 453 7612	05.22
09 68 453 7613	05.22
09 68 463 5811	05.22
09 68 463 5812	05.22
09 68 463 5813	05.22
09 68 463 7811	05.22
09 68 463 7812	05.22
09 68 463 7813	05.22
09 69 100 0022	05.63
09 69 100 0522	05.62
09 69 101 5051	05.58
09 69 101 7051	05.58
09 69 110 0022	05.63
09 69 110 0522	05.62
09 69 111 5051	05.58
09 69 111 7051	05.58
09 69 181 2550	05.71
09 69 181 5140	05.74
09 69 181 5141	05.74
09 69 181 5143	05.74
09 69 181 5230	05.74
09 69 181 5233	05.74
09 69 181 5420	05.72
09 69 181 5421	05.72
09 69 181 5422	05.72
09 69 181 5423	05.72
09 69 181 5821	05.72
09 69 181 5823	05.72
09 69 181 7140	05.74
09 69 181 7141	05.74
09 69 181 7143	05.74
09 69 181 7230	05.74
09 69 181 7233	05.74
09 69 181 7420	05.72
09 69 181 7421	05.72
09 69 181 7422	05.72
09 69 181 7423	05.72
09 69 181 7821	05.72
09 69 181 7823	05.72
09 69 182 2550	05.71
09 69 182 5140	05.74
09 69 182 5230	05.74
09 69 182 5232	05.74
09 69 182 5233	05.74
09 69 182 5420	05.72
09 69 182 5421	05.72
09 69 182 5422	05.72
09 69 182 5423	05.72
09 69 182 5821	05.72
09 69 182 5823	05.72
09 69 182 7140	05.74
09 69 182 7230	05.74
09 69 182 7232	05.74
09 69 182 7233	05.74
09 69 182 7420	05.72
09 69 182 7421	05.72
09 69 182 7422	05.72
09 69 182 7423	05.72

List of part numbers

Part number	Page
09 69 182 7821	05.72
09 69 182 7823	05.72
09 69 187 0060	05.77
09 69 187 0061	05.77
09 69 187 0062	05.77
09 69 187 0063	05.77
09 69 200 0033	05.62
09 69 200 0633	05.64
09 69 201 5072	05.55
09 69 201 5111	05.58
09 69 201 7072	05.55
09 69 201 7111	05.58
09 69 202 0072	05.65
09 69 202 0111	05.67
09 69 210 0033	05.62
09 69 210 0633	05.64
09 69 211 5072	05.55
09 69 211 5111	05.58
09 69 211 7072	05.55
09 69 211 7111	05.58
09 69 212 0072	05.65
09 69 212 0111	05.67
09 69 281 2550	05.71
09 69 281 5140	05.74
09 69 281 5141	05.74
09 69 281 5143	05.74
09 69 281 5230	05.74
09 69 281 5233	05.74
09 69 281 5420	05.72
09 69 281 5421	05.72
09 69 281 5422	05.72
09 69 281 5423	05.72
09 69 281 5821	05.72
09 69 281 5823	05.72
09 69 281 7140	05.74
09 69 281 7141	05.74
09 69 281 7143	05.74
09 69 281 7230	05.74
09 69 281 7233	05.74
09 69 281 7420	05.72
09 69 281 7421	05.72
09 69 281 7422	05.72
09 69 281 7423	05.72
09 69 281 7821	05.72
09 69 281 7823	05.72
09 69 282 2550	05.71
09 69 282 5140	05.74
09 69 282 5230	05.74
09 69 282 5232	05.74
09 69 282 5233	05.74
09 69 282 5420	05.72
09 69 282 5421	05.72
09 69 282 5422	05.72
09 69 282 5423	05.72
09 69 282 5821	05.72
09 69 282 5823	05.72
09 69 282 7140	05.74
09 69 282 7230	05.74
09 69 282 7232	05.74
09 69 282 7233	05.74
09 69 282 7420	05.72
09 69 282 7421	05.72
09 69 282 7422	05.72
09 69 282 7423	05.72
09 69 282 7821	05.72
09 69 282 7823	05.72
09 69 287 0060	05.77
09 69 287 0061	05.77
09 69 287 0062	05.77
09 69 287 0063	05.77
09 69 300 0055	05.62
09 69 301 5094	05.56
09 69 301 5133	05.56
09 69 301 5172	05.55
09 69 301 5211	05.58
09 69 301 7094	05.56
09 69 301 7133	05.56
09 69 301 7172	05.55
09 69 301 7211	05.58
09 69 302 0133	05.66
09 69 302 0172	05.65
09 69 302 0211	05.67
09 69 310 0055	05.62
09 69 311 5094	05.56
09 69 311 5133	05.56
09 69 311 5172	05.55
09 69 311 5211	05.58
09 69 311 7094	05.56
09 69 311 7133	05.56
09 69 311 7172	05.55
09 69 311 7211	05.58
09 69 312 0133	05.66
09 69 312 0172	05.65
09 69 312 0211	05.67
09 69 400 0077	05.62
09 69 400 0088	05.62
09 69 401 5136	05.59
09 69 401 5214	05.55
09 69 401 5253	05.56
09 69 401 5272	05.55
09 69 401 7136	05.59
09 69 401 7214	05.55
09 69 401 7253	05.56
09 69 401 7272	05.55
09 69 402 0214	05.65
09 69 402 0253	05.66
09 69 402 0272	05.65
09 69 410 0077	05.62
09 69 410 0088	05.62
09 69 411 5136	05.59
09 69 411 5214	05.55
09 69 411 5253	05.56
09 69 411 5272	05.55
09 69 411 7136	05.59
09 69 411 7214	05.55
09 69 411 7253	05.56
09 69 411 7272	05.55
09 69 412 0214	05.65
09 69 412 0253	05.66
09 69 412 0272	05.65
09 69 501 5247	05.60
09 69 501 5364	05.61
09 69 501 5432	05.61
09 69 501 7247	05.60
09 69 501 7364	05.61
09 69 501 7432	05.61
09 69 502 0364	05.68
09 69 511 5247	05.60
09 69 511 5364	05.61
09 69 511 5432	05.61
09 69 511 7247	05.60
09 69 511 7364	05.61
09 69 511 7432	05.61
09 69 512 0364	05.68
09 69 581 2550	05.71
09 69 681 2550	05.71
09 89 040 0000	20.38
09 98 000 3008	20.17
09 98 000 3009	20.17
09 98 000 3012	20.17
09 98 000 5000	20.17
09 98 000 6900	20.13
09 98 000 6901	20.13
09 98 000 6902	20.13
09 98 000 8000	20.15
09 98 000 8101	20.15
09 98 000 8102	20.15
09 98 000 8103	20.15
09 98 000 8104	20.15
09 98 000 8105	20.15
09 98 000 8106	20.15
09 98 000 8107	20.15
09 98 000 9001	20.11
09 98 000 9002	20.11
09 98 000 9003	20.11
09 98 300 8103	20.15
09 99 000 0004	20.03
09 99 000 0012	20.03
09 99 000 0021	20.02
09 99 000 0021	20.04
09 99 000 0052	20.03
09 99 000 0059	20.03
09 99 000 0059	20.05
09 99 000 0110	20.02
09 99 000 0110	20.04
09 99 000 0110	20.06
09 99 000 0114	20.44
09 99 000 0115	20.44
09 99 000 0116	20.44
09 99 000 0130	20.44
09 99 000 0131	20.44
09 99 000 0133	08.16
09 99 000 0133	08.20
09 99 000 0133	08.23
09 99 000 0133	08.48
09 99 000 0134	20.44
09 99 000 0135	20.44
09 99 000 0149	20.44
09 99 000 0150	20.44
09 99 000 0158	20.18
09 99 000 0169	20.18
09 99 000 0171	02.19
09 99 000 0171	20.18
09 99 000 0171	20.24
09 99 000 0175	02.19
09 99 000 0175	02.21
09 99 000 0175	02.22
09 99 000 0175	02.58
09 99 000 0175	02.60
09 99 000 0175	20.18
09 99 000 0179	20.44
09 99 000 0180	20.44
09 99 000 0185	20.39
09 99 000 0197	20.39
09 99 000 0201	20.37
09 99 000 0215	05.146
09 99 000 0216	05.146
09 99 000 0218	20.40
09 99 000 0220	20.40
09 99 000 0233	20.25
09 99 000 0235	20.25
09 99 000 0236	20.25
09 99 000 0237	20.25
09 99 000 0239	20.35
09 99 000 0244	20.37
09 99 000 0246	20.18
09 99 000 0249	20.18
09 99 000 0250	20.18
09 99 000 0251	20.18
09 99 000 0252	20.18
09 99 000 0253	20.18
09 99 000 0255	20.37
09 99 000 0255	20.39
09 99 000 0256	20.39
09 99 000 0261	20.37
09 99 000 0279	20.37
09 99 000 0282	20.37
09 99 000 0303	20.06
09 99 000 0304	20.06
09 99 000 0305	20.07
09 99 000 0319	02.68
09 99 000 0319	20.05
09 99 000 0367	20.05
09 99 000 0377	20.06
09 99 000 0380	03.19
09 99 000 0381	20.07
09 99 000 0382	03.54
09 99 000 0382	03.76
09 99 000 0384	03.54
09 99 000 0384	03.76
09 99 000 0384	03.103
09 99 000 0395	03.140
09 99 000 0406	20.40
09 99 000 0410	20.40
09 99 000 0414	20.40
09 99 000 0416	20.40
09 99 000 0420	20.40
09 99 000 0426	20.40
09 99 000 0434	20.40
09 99 000 0440	20.40
09 99 000 0450	20.40
09 99 000 0460	20.40
09 99 000 0464	20.40
09 99 000 0501	02.21
09 99 000 0501	02.22
09 99 000 0501	02.58
09 99 000 0501	02.60
09 99 000 0501	03.54
09 99 000 0501	03.76
09 99 000 0501	03.103
09 99 000 0501	03.114
09 99 000 0501	03.122
09 99 000 0501	20.20
09 99 000 0501	20.21
09 99 000 0501	20.22
09 99 000 0501	20.23
09 99 000 0503	20.21
09 99 000 0503	20.22
09 99 000 0504	20.21
09 99 000 0506	20.40
09 99 000 0507	20.22
09 99 000 0508	20.21
09 99 000 0508	20.22
09 99 000 0509	20.21
09 99 000 0510	20.40
09 99 000 0512	20.23
09 99 000 0513	02.19
09 99 000 0513	20.18
09 99 000 0514	20.40
09 99 000 0515	20.21
09 99 000 0516	20.40
09 99 000 0518	20.22
09 99 000 0519	20.21
09 99 000 0519	20.22
09 99 000 0520	20.40
09 99 000 0521	20.21
09 99 000 0522	20.21
09 99 000 0523	20.39
09 99 000 0525	03.114
09 99 000 0525	03.122
09 99 000 0526	20.40
09 99 000 0531	02.21

List of part numbers

Part number	Page
09 99 000 0531	02.22
09 99 000 0531	02.58
09 99 000 0531	02.60
09 99 000 0531	03.54
09 99 000 0531	03.76
09 99 000 0531	03.103
09 99 000 0531	03.122
09 99 000 0531	20.20
09 99 000 0531	20.21
09 99 000 0533	20.23
09 99 000 0534	20.40
09 99 000 0535	02.19
09 99 000 0535	20.18
09 99 000 0540	20.40
09 99 000 0550	20.40
09 99 000 0560	20.40
09 99 000 0564	20.40
09 99 000 0597	20.18
09 99 000 0600	20.39
09 99 000 0628	20.18
09 99 000 0646	03.54
09 99 000 0646	03.103
09 99 000 0646	03.114
09 99 000 0646	03.123
09 99 000 0710	20.40
09 99 000 0714	20.40
09 99 000 0716	20.40
09 99 000 0720	20.40
09 99 000 0726	20.40
09 99 000 0734	20.40
09 99 000 0740	20.40
09 99 000 0750	20.40
09 99 000 0760	20.40
09 99 000 0764	20.40
09 99 000 0810	20.02
09 99 000 0810	20.04
09 99 000 0810	20.06
09 99 000 0811	20.02
09 99 000 0811	20.04
09 99 000 0811	20.06
09 99 000 0812	20.02
09 99 000 0812	20.04
09 99 000 0812	20.06
09 99 000 0813	20.02
09 99 000 0813	20.04
09 99 000 0813	20.06
09 99 000 0814	20.06
09 99 000 0886	02.68
09 99 000 0888	02.68
09 99 000 0888	20.02
09 99 000 0888	20.04
09 99 000 0888	20.06
09 99 600 0201	20.44
09 99 600 0709	20.39
09 99 600 0715	20.39
09 99 600 0725	20.39
10 12 005 1002	04.16
10 12 005 1004	04.16
10 12 005 2001	04.17
14 01 021 3101 000	15.06
14 01 021 3101 333	15.06
14 01 021 3102 000	15.06
14 01 021 3102 333	15.06
14 01 031 3101 000	15.06
14 01 031 3101 333	15.06
14 01 031 3102 000	15.06
14 01 031 3102 333	15.06
14 01 041 3101 000	15.06
14 01 041 3101 333	15.06
14 01 041 3102 000	15.06
14 01 041 3102 333	15.06
14 01 051 3101 000	15.06
14 01 051 3101 333	15.06
14 01 051 3102 000	15.06
14 01 051 3102 333	15.06
14 01 061 3101 000	15.06
14 01 061 3101 333	15.06
14 01 061 3102 000	15.06
14 01 061 3102 333	15.06
14 01 071 3101 000	15.06
14 01 071 3101 333	15.06
14 01 071 3102 000	15.06
14 01 071 3102 333	15.06
14 01 081 3101 000	15.06
14 01 081 3101 333	15.06
14 01 081 3102 000	15.06
14 01 081 3102 333	15.06
14 01 091 3101 000	15.06
14 01 091 3101 333	15.06
14 01 091 3102 000	15.06
14 01 091 3102 333	15.06
14 01 101 3101 000	15.06
14 01 101 3101 333	15.06
14 01 101 3102 000	15.06
14 01 101 3102 333	15.06
14 01 111 3101 000	15.06
14 01 111 3101 333	15.06
14 01 111 3102 000	15.06
14 01 111 3102 333	15.06
14 01 121 3101 000	15.06
14 01 121 3101 333	15.06
14 01 121 3102 000	15.06
14 01 121 3102 333	15.06
14 02 021 4101 000	15.12
14 02 021 4101 333	15.12
14 02 021 4402 000	15.14
14 02 021 4402 333	15.14
14 02 021 5101 000	15.12
14 02 021 5101 333	15.12
14 02 021 5402 000	15.14
14 02 021 5402 333	15.14
14 02 021 6101 000	15.30
14 02 021 6101 333	15.30
14 02 021 6402 000	15.34
14 02 021 6402 333	15.34
14 02 021 6404 000	15.32
14 02 021 6404 333	15.32
14 02 022 5402 000	15.48
14 02 022 7402 000	15.48
14 02 031 4101 000	15.12
14 02 031 4101 333	15.12
14 02 031 4402 000	15.14
14 02 031 4402 333	15.14
14 02 031 5101 000	15.12
14 02 031 5101 333	15.12
14 02 031 5402 000	15.14
14 02 031 5402 333	15.14
14 02 031 6101 000	15.30
14 02 031 6101 333	15.30
14 02 031 6402 000	15.34
14 02 031 6402 333	15.34
14 02 031 6404 000	15.32
14 02 031 6404 333	15.32
14 02 032 5402 000	15.48
14 02 032 7402 000	15.48
14 02 041 4101 000	15.12
14 02 041 4101 333	15.12
14 02 041 4402 000	15.14
14 02 041 4402 333	15.14
14 02 041 5101 000	15.12
14 02 041 5101 333	15.12
14 02 041 5402 000	15.14
14 02 041 5402 333	15.14
14 02 041 6101 000	15.30
14 02 041 6101 333	15.30
14 02 041 6402 000	15.34
14 02 041 6402 333	15.34
14 02 041 6404 000	15.32
14 02 041 6404 333	15.32
14 02 042 5402 000	15.48
14 02 042 7402 000	15.48
14 02 051 4101 000	15.12
14 02 051 4101 333	15.12
14 02 051 4402 000	15.14
14 02 051 4402 333	15.14
14 02 051 5101 000	15.12
14 02 051 5101 333	15.12
14 02 051 5402 000	15.14
14 02 051 5402 333	15.14
14 02 051 6402 000	15.34
14 02 051 6402 333	15.34
14 02 051 6404 000	15.32
14 02 051 6404 333	15.32
14 02 061 4101 000	15.12
14 02 061 4101 333	15.12
14 02 061 4402 000	15.14
14 02 061 4402 333	15.14
14 02 061 5101 000	15.12
14 02 061 5101 333	15.12
14 02 061 5402 000	15.14
14 02 061 5402 333	15.14
14 02 061 6402 000	15.34
14 02 061 6402 333	15.34
14 02 061 6404 000	15.32
14 02 061 6404 333	15.32
14 02 071 4101 000	15.12
14 02 071 4101 333	15.12
14 02 071 4402 000	15.14
14 02 071 4402 333	15.14
14 02 071 5101 000	15.12
14 02 071 5101 333	15.12
14 02 071 5402 000	15.14
14 02 071 5402 333	15.14
14 02 071 6402 000	15.34
14 02 071 6402 333	15.34
14 02 071 6404 000	15.32
14 02 071 6404 333	15.32
14 02 081 4101 000	15.12
14 02 081 4101 333	15.12
14 02 081 4402 000	15.14
14 02 081 4402 333	15.14
14 02 081 5101 000	15.12
14 02 081 5101 333	15.12
14 02 081 5402 000	15.14
14 02 081 5402 333	15.14
14 02 081 6402 000	15.34
14 02 081 6402 333	15.34
14 02 081 6404 000	15.32
14 02 081 6404 333	15.32
14 02 091 4101 000	15.12
14 02 091 4101 333	15.12
14 02 091 4402 000	15.14
14 02 091 4402 333	15.14
14 02 091 5101 000	15.12
14 02 091 5101 333	15.12
14 02 091 5402 000	15.14
14 02 091 5402 333	15.14
14 02 091 6402 000	15.34
14 02 091 6402 333	15.34
14 02 101 4101 000	15.12
14 02 101 4101 333	15.12
14 02 101 4402 000	15.14
14 02 101 4402 333	15.14
14 02 101 5101 000	15.12
14 02 101 5101 333	15.12
14 02 101 5402 000	15.14
14 02 101 5402 333	15.14
14 02 101 6402 000	15.34
14 02 101 6402 333	15.34
14 02 111 4101 000	15.12
14 02 111 4101 333	15.12
14 02 111 4402 000	15.14
14 02 111 4402 333	15.14
14 02 111 5101 000	15.12
14 02 111 5101 333	15.12
14 02 111 5402 000	15.14
14 02 111 5402 333	15.14
14 02 111 6402 000	15.34
14 02 111 6402 333	15.34
14 02 121 4101 000	15.12
14 02 121 4101 333	15.12
14 02 121 4402 000	15.14
14 02 121 4402 333	15.14
14 02 121 5101 000	15.12
14 02 121 5101 333	15.12
14 02 121 5402 000	15.14
14 02 121 5402 333	15.14
14 02 121 6402 000	15.34
14 02 121 6402 333	15.34
14 02 131 4101 000	15.12
14 02 131 4101 333	15.12
14 02 131 5101 000	15.12
14 02 131 5101 333	15.12
14 02 141 4101 000	15.12
14 02 141 4101 333	15.12
14 02 141 5101 000	15.12
14 02 141 5101 333	15.12
14 02 151 4101 000	15.12
14 02 151 4101 333	15.12
14 02 151 5101 000	15.12
14 02 151 5101 333	15.12
14 02 161 4101 000	15.12
14 02 161 4101 333	15.12
14 02 161 5101 000	15.12
14 02 161 5101 333	15.12
14 03 021 6101 000	15.28
14 03 031 6101 000	15.28
14 03 041 6101 000	15.28
14 03 051 6101 000	15.28
14 03 061 6101 000	15.28
14 03 071 6101 000	15.28
14 03 081 6101 000	15.28
14 03 091 6101 000	15.28
14 03 101 6101 000	15.28
14 03 111 6101 000	15.28
14 03 121 6101 000	15.28

List of part numbers

Part number	Page
14 03 131 6101 000	15.28
14 03 141 6101 000	15.28
14 03 151 6101 000	15.28
14 03 161 6101 000	15.28
14 03 171 6101 000	15.28
14 03 181 6101 000	15.28
14 11 021 3001 000	15.10
14 11 021 3001 333	15.10
14 11 021 3002 000	15.10
14 11 021 3002 333	15.10
14 11 031 3001 000	15.10
14 11 031 3001 333	15.10
14 11 031 3002 000	15.10
14 11 031 3002 333	15.10
14 11 041 0002 000	15.04
14 11 041 0002 333	15.04
14 11 041 3001 000	15.10
14 11 041 3001 333	15.10
14 11 041 3002 000	15.10
14 11 041 3002 333	15.10
14 11 051 3001 000	15.10
14 11 051 3001 333	15.10
14 11 051 3002 000	15.10
14 11 051 3002 333	15.10
14 11 061 3001 000	15.10
14 11 061 3001 333	15.10
14 11 061 3002 000	15.10
14 11 061 3002 333	15.10
14 11 071 3001 000	15.10
14 11 071 3001 333	15.10
14 11 071 3002 000	15.10
14 11 071 3002 333	15.10
14 11 081 3001 000	15.10
14 11 081 3001 333	15.10
14 11 081 3002 000	15.10
14 11 081 3002 333	15.10
14 11 091 3001 000	15.10
14 11 091 3001 333	15.10
14 11 091 3002 000	15.10
14 11 091 3002 333	15.10
14 11 101 3001 000	15.10
14 11 101 3001 333	15.10
14 11 101 3002 000	15.10
14 11 101 3002 333	15.10
14 11 111 3001 000	15.10
14 11 111 3001 333	15.10
14 11 111 3002 000	15.10
14 11 111 3002 333	15.10
14 11 121 3001 000	15.10
14 11 121 3001 333	15.10
14 11 121 3002 000	15.10
14 11 121 3002 333	15.10
14 12 021 4001 000	15.24
14 12 021 4001 333	15.24
14 12 021 4002 000	15.24
14 12 021 4002 333	15.24
14 12 021 4005 000	15.26
14 12 021 4005 333	15.26
14 12 021 4006 000	15.26
14 12 021 4006 333	15.26
14 12 021 5001 000	15.24
14 12 021 5001 333	15.24
14 12 021 5002 000	15.24
14 12 021 5002 333	15.24
14 12 021 5005 000	15.26
14 12 021 5005 333	15.26
14 12 021 5006 000	15.26
14 12 021 5006 333	15.26
14 12 021 6001 000	15.44
14 12 021 6001 333	15.44
14 12 021 6002 000	15.44
14 12 021 6002 333	15.44
14 12 021 7001 000	15.44
14 12 021 7001 333	15.44
14 12 021 7002 000	15.44
14 12 021 7002 333	15.44
14 12 021 7005 000	15.46
14 12 021 7005 333	15.46
14 12 021 7006 000	15.46
14 12 021 7006 333	15.46
14 12 031 4001 000	15.24
14 12 031 4001 333	15.24
14 12 031 4002 000	15.24
14 12 031 4002 333	15.24
14 12 031 4005 000	15.26
14 12 031 4005 333	15.26
14 12 031 4006 000	15.26
14 12 031 4006 333	15.26
14 12 031 5001 000	15.24
14 12 031 5001 333	15.24
14 12 031 5002 000	15.24
14 12 031 5002 333	15.24
14 12 031 5005 000	15.26
14 12 031 5005 333	15.26
14 12 031 5006 000	15.26
14 12 031 5006 333	15.26
14 12 031 6001 000	15.44
14 12 031 6001 333	15.44
14 12 031 6002 000	15.44
14 12 031 6002 333	15.44
14 12 031 7001 000	15.44
14 12 031 7001 333	15.44
14 12 031 7002 000	15.44
14 12 031 7002 333	15.44
14 12 031 7005 000	15.46
14 12 031 7005 333	15.46
14 12 031 7006 000	15.46
14 12 031 7006 333	15.46
14 12 041 4001 000	15.24
14 12 041 4001 333	15.24
14 12 041 4002 000	15.24
14 12 041 4002 333	15.24
14 12 041 4005 000	15.26
14 12 041 4005 333	15.26
14 12 041 4006 000	15.26
14 12 041 4006 333	15.26
14 12 041 5001 000	15.24
14 12 041 5001 333	15.24
14 12 041 5002 000	15.24
14 12 041 5002 333	15.24
14 12 041 5005 000	15.26
14 12 041 5005 333	15.26
14 12 041 5006 000	15.26
14 12 041 5006 333	15.26
14 12 041 6001 000	15.44
14 12 041 6001 333	15.44
14 12 041 6002 000	15.44
14 12 041 6002 333	15.44
14 12 041 7001 000	15.44
14 12 041 7001 333	15.44
14 12 041 7002 000	15.44
14 12 041 7002 333	15.44
14 12 041 7005 000	15.46
14 12 041 7005 333	15.46
14 12 041 7006 000	15.46
14 12 041 7006 333	15.46
14 12 051 4001 000	15.24
14 12 051 4001 333	15.24
14 12 051 4002 000	15.24
14 12 051 4002 333	15.24
14 12 051 4005 000	15.26
14 12 051 4005 333	15.26
14 12 051 4006 000	15.26
14 12 051 4006 333	15.26
14 12 051 5001 000	15.24
14 12 051 5001 333	15.24
14 12 051 5002 000	15.24
14 12 051 5002 333	15.24
14 12 051 5005 000	15.26
14 12 051 5005 333	15.26
14 12 051 5006 000	15.26
14 12 051 5006 333	15.26
14 12 051 6001 000	15.44
14 12 051 6001 333	15.44
14 12 051 6002 000	15.44
14 12 051 6002 333	15.44
14 12 051 7001 000	15.44
14 12 051 7001 333	15.44
14 12 051 7002 000	15.44
14 12 051 7002 333	15.44
14 12 051 7005 000	15.46
14 12 051 7005 333	15.46
14 12 051 7006 000	15.46
14 12 051 7006 333	15.46
14 12 061 4001 000	15.24
14 12 061 4001 333	15.24
14 12 061 4002 000	15.24
14 12 061 4002 333	15.24
14 12 061 4005 000	15.26
14 12 061 4005 333	15.26
14 12 061 4006 000	15.26
14 12 061 4006 333	15.26
14 12 061 5001 000	15.24
14 12 061 5001 333	15.24
14 12 061 5002 000	15.24
14 12 061 5002 333	15.24
14 12 061 5005 000	15.26
14 12 061 5005 333	15.26
14 12 061 5006 000	15.26
14 12 061 5006 333	15.26
14 12 061 6001 000	15.44
14 12 061 6001 333	15.44
14 12 061 6002 000	15.44
14 12 061 6002 333	15.44
14 12 061 7001 000	15.44
14 12 061 7001 333	15.44
14 12 061 7002 000	15.44
14 12 061 7002 333	15.44
14 12 061 7005 000	15.46
14 12 061 7005 333	15.46
14 12 061 7006 000	15.46
14 12 061 7006 333	15.46
14 12 071 4001 000	15.24
14 12 071 4001 333	15.24
14 12 071 4002 000	15.24
14 12 071 4002 333	15.24
14 12 071 4005 000	15.26
14 12 071 4005 333	15.26
14 12 071 4006 000	15.26
14 12 071 4006 333	15.26
14 12 071 5001 000	15.24
14 12 071 5001 333	15.24
14 12 071 5002 000	15.24
14 12 071 5002 333	15.24
14 12 071 5005 000	15.26
14 12 071 5005 333	15.26
14 12 071 5006 000	15.26
14 12 071 5006 333	15.26
14 12 071 6001 000	15.44
14 12 071 6001 333	15.44
14 12 071 6002 000	15.44
14 12 071 6002 333	15.44
14 12 071 7001 000	15.44
14 12 071 7001 333	15.44
14 12 071 7002 000	15.44
14 12 071 7002 333	15.44
14 12 071 7005 000	15.46
14 12 071 7005 333	15.46
14 12 071 7006 000	15.46
14 12 071 7006 333	15.46
14 12 081 4001 000	15.24
14 12 081 4001 333	15.24
14 12 081 4002 000	15.24
14 12 081 4002 333	15.24
14 12 081 4005 000	15.26
14 12 081 4005 333	15.26
14 12 081 4006 000	15.26
14 12 081 4006 333	15.26
14 12 081 5001 000	15.24
14 12 081 5001 333	15.24
14 12 081 5002 000	15.24
14 12 081 5002 333	15.24
14 12 081 5005 000	15.26
14 12 081 5005 333	15.26
14 12 081 5006 000	15.26
14 12 081 5006 333	15.26
14 12 081 6001 000	15.44
14 12 081 6001 333	15.44
14 12 081 6002 000	15.44
14 12 081 6002 333	15.44
14 12 081 7001 000	15.44
14 12 081 7001 333	15.44
14 12 081 7002 000	15.44
14 12 081 7002 333	15.44
14 12 081 7005 000	15.46
14 12 081 7005 333	15.46
14 12 081 7006 000	15.46
14 12 081 7006 333	15.46
14 12 091 4001 000	15.24
14 12 091 4001 333	15.24
14 12 091 4002 000	15.24
14 12 091 4002 333	15.24
14 12 091 4005 000	15.26
14 12 091 4005 333	15.26
14 12 091 4006 000	15.26
14 12 091 4006 333	15.26
14 12 091 5001 000	15.24
14 12 091 5001 333	15.24
14 12 091 5002 000	15.24
14 12 091 5002 333	15.24
14 12 091 5005 000	15.26
14 12 091 5005 333	15.26
14 12 091 5006 000	15.26
14 12 091 5006 333	15.26
14 12 091 6001 000	15.44
14 12 091 6001 333	15.44
14 12 091 6002 000	15.44
14 12 091 6002 333	15.44
14 12 091 7001 000	15.44
14 12 091 7001 333	15.44
14 12 091 7002 000	15.44
14 12 091 7002 333	15.44
14 12 091 7005 000	15.46
14 12 091 7005 333	15.46
14 12 091 7006 000	15.46
14 12 091 7006 333	15.46
14 12 101 4001 000	15.24
14 12 101 4001 333	15.24
14 12 101 4002 000	15.24
14 12 101 4002 333	15.24
14 12 101 4005 000	15.26
14 12 101 4005 333	15.26
14 12 101 4006 000	15.26
14 12 101 4006 333	15.26
14 12 101 5001 000	15.24
14 12 101 5001 333	15.24
14 12 101 5002 000	15.24
14 12 101 5002 333	15.24
14 12 101 5005 000	15.26
14 12 101 5005 333	15.26
14 12 101 5006 000	15.26
14 12 101 5006 333	15.26
14 12 101 6001 000	15.44
14 12 101 6001 333	15.44
14 12 101 6002 000	15.44
14 12 101 6002 333	15.44

List of part numbers

Part number	Page
14 12 101 7001 000	15.44
14 12 101 7001 333	15.44
14 12 101 7002 000	15.44
14 12 101 7002 333	15.44
14 12 101 7005 000	15.46
14 12 101 7005 333	15.46
14 12 101 7006 000	15.46
14 12 101 7006 333	15.46
14 12 111 4001 000	15.24
14 12 111 4001 333	15.24
14 12 111 4002 000	15.24
14 12 111 4002 333	15.24
14 12 111 4005 000	15.26
14 12 111 4005 333	15.26
14 12 111 4006 000	15.26
14 12 111 4006 333	15.26
14 12 111 5001 000	15.24
14 12 111 5001 333	15.24
14 12 111 5002 000	15.24
14 12 111 5002 333	15.24
14 12 111 5005 000	15.26
14 12 111 5005 333	15.26
14 12 111 5006 000	15.26
14 12 111 5006 333	15.26
14 12 111 6001 000	15.44
14 12 111 6001 333	15.44
14 12 111 6002 000	15.44
14 12 111 6002 333	15.44
14 12 111 7001 000	15.44
14 12 111 7001 333	15.44
14 12 111 7002 000	15.44
14 12 111 7002 333	15.44
14 12 111 7005 000	15.46
14 12 111 7005 333	15.46
14 12 111 7006 000	15.46
14 12 111 7006 333	15.46
14 12 121 4001 000	15.24
14 12 121 4001 333	15.24
14 12 121 4002 000	15.24
14 12 121 4002 333	15.24
14 12 121 4005 000	15.26
14 12 121 4005 333	15.26
14 12 121 4006 000	15.26
14 12 121 4006 333	15.26
14 12 121 5001 000	15.24
14 12 121 5001 333	15.24
14 12 121 5002 000	15.24
14 12 121 5002 333	15.24
14 12 121 5005 000	15.26
14 12 121 5005 333	15.26
14 12 121 5006 000	15.26
14 12 121 5006 333	15.26
14 12 121 6001 000	15.44
14 12 121 6001 333	15.44
14 12 121 6002 000	15.44
14 12 121 6002 333	15.44
14 12 121 7001 000	15.44
14 12 121 7001 333	15.44
14 12 121 7002 000	15.44
14 12 121 7002 333	15.44
14 12 121 7005 000	15.46
14 12 121 7005 333	15.46
14 12 121 7006 000	15.46
14 12 121 7006 333	15.46
14 12 131 4001 000	15.24
14 12 131 4001 333	15.24
14 12 131 4002 000	15.24
14 12 131 4002 333	15.24
14 12 131 4005 000	15.26
14 12 131 4005 333	15.26
14 12 131 4006 000	15.26
14 12 131 4006 333	15.26
14 12 131 5001 000	15.24
14 12 131 5001 333	15.24
14 12 131 5002 000	15.24
14 12 131 5002 333	15.24
14 12 131 5005 000	15.26
14 12 131 5005 333	15.26
14 12 131 5006 000	15.26
14 12 131 5006 333	15.26
14 12 131 6001 000	15.44
14 12 131 6001 333	15.44
14 12 131 6002 000	15.44
14 12 131 6002 333	15.44
14 12 131 7001 000	15.44
14 12 131 7001 333	15.44
14 12 131 7002 000	15.44
14 12 131 7002 333	15.44
14 12 131 7005 000	15.46
14 12 131 7005 333	15.46
14 12 131 7006 000	15.46
14 12 131 7006 333	15.46
14 12 141 4001 000	15.24
14 12 141 4001 333	15.24
14 12 141 4002 000	15.24
14 12 141 4002 333	15.24
14 12 141 4005 000	15.26
14 12 141 4005 333	15.26
14 12 141 4006 000	15.26
14 12 141 4006 333	15.26
14 12 141 5001 000	15.24
14 12 141 5001 333	15.24
14 12 141 5002 000	15.24
14 12 141 5002 333	15.24
14 12 141 5005 000	15.26
14 12 141 5005 333	15.26
14 12 141 5006 000	15.26
14 12 141 5006 333	15.26
14 12 141 6001 000	15.44
14 12 141 6001 333	15.44
14 12 141 6002 000	15.44
14 12 141 6002 333	15.44
14 12 141 7001 000	15.44
14 12 141 7001 333	15.44
14 12 141 7002 000	15.44
14 12 141 7002 333	15.44
14 12 141 7005 000	15.46
14 12 141 7005 333	15.46
14 12 141 7006 000	15.46
14 12 141 7006 333	15.46
14 12 151 4001 000	15.24
14 12 151 4001 333	15.24
14 12 151 4002 000	15.24
14 12 151 4002 333	15.24
14 12 151 4005 000	15.26
14 12 151 4005 333	15.26
14 12 151 4006 000	15.26
14 12 151 4006 333	15.26
14 12 151 5001 000	15.24
14 12 151 5001 333	15.24
14 12 151 5002 000	15.24
14 12 151 5002 333	15.24
14 12 151 5005 000	15.26
14 12 151 5005 333	15.26
14 12 151 5006 000	15.26
14 12 151 5006 333	15.26
14 12 151 6001 000	15.44
14 12 151 6001 333	15.44
14 12 151 6002 000	15.44
14 12 151 6002 333	15.44
14 12 151 7001 000	15.44
14 12 151 7001 333	15.44
14 12 151 7002 000	15.44
14 12 151 7002 333	15.44
14 12 151 7005 000	15.46
14 12 151 7005 333	15.46
14 12 151 7006 000	15.46
14 12 151 7006 333	15.46
14 12 161 4001 000	15.24
14 12 161 4001 333	15.24
14 12 161 4002 000	15.24
14 12 161 4002 333	15.24
14 12 161 4005 000	15.26
14 12 161 4005 333	15.26
14 12 161 4006 000	15.26
14 12 161 4006 333	15.26
14 12 161 5001 000	15.24
14 12 161 5001 333	15.24
14 12 161 5002 000	15.24
14 12 161 5002 333	15.24
14 12 161 5005 000	15.26
14 12 161 5005 333	15.26
14 12 161 5006 000	15.26
14 12 161 5006 333	15.26
14 12 161 6001 000	15.44
14 12 161 6001 333	15.44
14 12 161 6002 000	15.44
14 12 161 6002 333	15.44
14 12 161 7001 000	15.44
14 12 161 7001 333	15.44
14 12 161 7002 000	15.44
14 12 161 7002 333	15.44
14 12 161 7005 000	15.46
14 12 161 7005 333	15.46
14 12 161 7006 000	15.46
14 12 161 7006 333	15.46
14 12 171 4001 000	15.24
14 12 171 4001 333	15.24
14 12 171 4002 000	15.24
14 12 171 4002 333	15.24
14 12 171 4005 000	15.26
14 12 171 4005 333	15.26
14 12 171 4006 000	15.26
14 12 171 4006 333	15.26
14 12 171 5001 000	15.24
14 12 171 5001 333	15.24
14 12 171 5002 000	15.24
14 12 171 5002 333	15.24
14 12 171 5005 000	15.26
14 12 171 5005 333	15.26
14 12 171 5006 000	15.26
14 12 171 5006 333	15.26
14 12 171 6001 000	15.44
14 12 171 6001 333	15.44
14 12 171 6002 000	15.44
14 12 171 6002 333	15.44
14 12 171 7001 000	15.44
14 12 171 7001 333	15.44
14 12 171 7002 000	15.44
14 12 171 7002 333	15.44
14 12 171 7005 000	15.46
14 12 171 7005 333	15.46
14 12 171 7006 000	15.46
14 12 171 7006 333	15.46
14 12 181 4001 000	15.24
14 12 181 4001 333	15.24
14 12 181 4002 000	15.24
14 12 181 4002 333	15.24
14 12 181 4005 000	15.26
14 12 181 4005 333	15.26
14 12 181 4006 000	15.26
14 12 181 4006 333	15.26
14 12 181 5001 000	15.24
14 12 181 5001 333	15.24
14 12 181 5002 000	15.24
14 12 181 5002 333	15.24
14 12 181 5005 000	15.26
14 12 181 5005 333	15.26
14 12 181 5006 000	15.26
14 12 181 5006 333	15.26
14 12 181 6001 000	15.44
14 12 181 6001 333	15.44
14 12 181 6002 000	15.44
14 12 181 6002 333	15.44
14 12 181 7001 000	15.44
14 12 181 7001 333	15.44
14 12 181 7002 000	15.44
14 12 181 7002 333	15.44
14 12 181 7005 000	15.46
14 12 181 7005 333	15.46
14 12 181 7006 000	15.46
14 12 181 7006 333	15.46
14 12 191 4001 000	15.24
14 12 191 4001 333	15.24
14 12 191 4002 000	15.24
14 12 191 4002 333	15.24
14 12 191 4005 000	15.26
14 12 191 4005 333	15.26
14 12 191 4006 000	15.26
14 12 191 4006 333	15.26
14 12 191 5001 000	15.24
14 12 191 5001 333	15.24
14 12 191 5002 000	15.24
14 12 191 5002 333	15.24
14 12 191 5005 000	15.26
14 12 191 5005 333	15.26
14 12 191 5006 000	15.26
14 12 191 5006 333	15.26
14 12 191 6001 000	15.44
14 12 191 6001 333	15.44
14 12 191 6002 000	15.44
14 12 191 6002 333	15.44
14 12 191 7001 000	15.44
14 12 191 7001 333	15.44
14 12 191 7002 000	15.44
14 12 191 7002 333	15.44
14 12 201 4001 000	15.24
14 12 201 4001 333	15.24
14 12 201 4002 000	15.24
14 12 201 4002 333	15.24
14 12 201 4005 000	15.26
14 12 201 4005 333	15.26
14 12 201 4006 000	15.26
14 12 201 4006 333	15.26
14 12 201 5001 000	15.24
14 12 201 5001 333	15.24
14 12 201 5002 000	15.24
14 12 201 5002 333	15.24
14 12 201 5005 000	15.26
14 12 201 5005 333	15.26
14 12 201 5006 000	15.26
14 12 201 5006 333	15.26
14 12 201 6001 000	15.44
14 12 201 6001 333	15.44
14 12 201 7001 000	15.44
14 12 201 7001 333	15.44
14 12 201 7002 000	15.44
14 12 201 7002 333	15.44
14 12 211 4001 000	15.24
14 12 211 4001 333	15.24
14 12 211 4002 000	15.24
14 12 211 4002 333	15.24
14 12 211 4005 000	15.26
14 12 211 4005 333	15.26
14 12 211 4006 000	15.26
14 12 211 4006 333	15.26
14 12 211 5001 000	15.24
14 12 211 5001 333	15.24
14 12 211 5002 000	15.24
14 12 211 5002 333	15.24
14 12 211 5005 000	15.26
14 12 211 5005 333	15.26
14 12 211 5006 000	15.26
14 12 211 5006 333	15.26
14 12 221 4001 000	15.24
14 12 221 4001 333	15.24
14 12 221 4002 000	15.24
14 12 221 4002 333	15.24
14 12 221 4005 000	15.26
14 12 221 4005 333	15.26
14 12 221 4006 000	15.26
14 12 221 4006 333	15.26
14 12 221 5001 000	15.24
14 12 221 5001 333	15.24
14 12 221 5002 000	15.24
14 12 221 5002 333	15.24
14 12 221 5005 000	15.26
14 12 221 5005 333	15.26
14 12 221 5006 000	15.26
14 12 221 5006 333	15.26
14 12 231 4001 000	15.24
14 12 231 4001 333	15.24
14 12 231 4002 000	15.24
14 12 231 4002 333	15.24
14 12 231 5001 000	15.24
14 12 231 5001 333	15.24
14 12 231 5002 000	15.24
14 12 231 5002 333	15.24

List of part numbers

Part number	Page
14 12 241 4001 000	15.24
14 12 241 4001 333	15.24
14 12 241 4002 000	15.24
14 12 241 4002 333	15.24
14 12 241 5001 000	15.24
14 12 241 5001 333	15.24
14 12 241 5002 000	15.24
14 12 241 5002 333	15.24
14 12 251 4001 000	15.24
14 12 251 4001 333	15.24
14 12 251 4002 000	15.24
14 12 251 4002 333	15.24
14 12 251 5001 000	15.24
14 12 251 5001 333	15.24
14 12 251 5002 000	15.24
14 12 251 5002 333	15.24
14 13 021 4001 000	15.22
14 13 021 6001 000	15.42
14 13 021 7001 000	15.42
14 13 031 4001 000	15.22
14 13 031 6001 000	15.42
14 13 031 7001 000	15.42
14 13 041 4001 000	15.22
14 13 041 6001 000	15.42
14 13 041 7001 000	15.42
14 13 051 4001 000	15.22
14 13 051 6001 000	15.42
14 13 051 7001 000	15.42
14 13 061 4001 000	15.22
14 13 061 6001 000	15.42
14 13 061 7001 000	15.42
14 13 071 4001 000	15.22
14 13 071 6001 000	15.42
14 13 071 7001 000	15.42
14 13 081 4001 000	15.22
14 13 081 6001 000	15.42
14 13 081 7001 000	15.42
14 13 091 4001 000	15.22
14 13 091 6001 000	15.42
14 13 091 7001 000	15.42
14 13 101 4001 000	15.22
14 13 101 6001 000	15.42
14 13 101 7001 000	15.42
14 13 111 4001 000	15.22
14 13 111 6001 000	15.42
14 13 111 7001 000	15.42
14 13 121 4001 000	15.22
14 13 121 6001 000	15.42
14 13 121 7001 000	15.42
14 31 021 3101 000	15.08
14 31 021 4102 000	15.16
14 31 021 4106 000	15.18
14 31 021 4401 000	15.20
14 31 021 4402 000	15.20
14 31 021 5102 000	15.16
14 31 021 5106 000	15.18
14 31 021 5401 000	15.20
14 31 021 5402 000	15.20
14 31 021 6102 000	15.36
14 31 021 6402 000	15.40
14 31 021 7102 000	15.36
14 31 021 7106 000	15.38
14 31 021 7401 000	15.40
14 31 021 7402 000	15.40
14 31 031 3101 000	15.08
14 31 031 4102 000	15.16
14 31 031 4106 000	15.18
14 31 031 4401 000	15.20
14 31 031 4402 000	15.20
14 31 031 5102 000	15.16
14 31 031 5106 000	15.18
14 31 031 5401 000	15.20
14 31 031 5402 000	15.20
14 31 031 6102 000	15.36
14 31 031 6402 000	15.40
14 31 031 7102 000	15.36
14 31 031 7106 000	15.38
14 31 031 7401 000	15.40
14 31 031 7402 000	15.40
14 31 041 0301 000	15.04
14 31 041 3101 000	15.08
14 31 041 4102 000	15.16
14 31 041 4106 000	15.18
14 31 041 4401 000	15.20
14 31 041 4402 000	15.20
14 31 041 5102 000	15.16
14 31 041 5106 000	15.18
14 31 041 5401 000	15.20
14 31 041 5402 000	15.20
14 31 041 6102 000	15.36
14 31 041 6402 000	15.40
14 31 041 7102 000	15.36
14 31 041 7106 000	15.38
14 31 041 7401 000	15.40
14 31 041 7402 000	15.40
14 31 051 3101 000	15.08
14 31 051 4102 000	15.16
14 31 051 4106 000	15.18
14 31 051 4401 000	15.20
14 31 051 4402 000	15.20
14 31 051 5102 000	15.16
14 31 051 5106 000	15.18
14 31 051 5401 000	15.20
14 31 051 5402 000	15.20
14 31 051 6102 000	15.36
14 31 051 6402 000	15.40
14 31 051 7102 000	15.36
14 31 051 7106 000	15.38
14 31 051 7401 000	15.40
14 31 051 7402 000	15.40
14 31 061 3101 000	15.08
14 31 061 4102 000	15.16
14 31 061 4106 000	15.18
14 31 061 4401 000	15.20
14 31 061 4402 000	15.20
14 31 061 5102 000	15.16
14 31 061 5106 000	15.18
14 31 061 5401 000	15.20
14 31 061 5402 000	15.20
14 31 061 6102 000	15.36
14 31 061 6402 000	15.40
14 31 061 7102 000	15.36
14 31 061 7106 000	15.38
14 31 061 7401 000	15.40
14 31 061 7402 000	15.40
14 31 071 3101 000	15.08
14 31 071 4102 000	15.16
14 31 071 4106 000	15.18
14 31 071 4401 000	15.20
14 31 071 4402 000	15.20
14 31 071 5102 000	15.16
14 31 071 5106 000	15.18
14 31 071 5401 000	15.20
14 31 071 5402 000	15.20
14 31 071 6102 000	15.36
14 31 071 6402 000	15.40
14 31 071 7102 000	15.36
14 31 071 7106 000	15.38
14 31 071 7401 000	15.40
14 31 071 7402 000	15.40
14 31 081 3101 000	15.08
14 31 081 4102 000	15.16
14 31 081 4106 000	15.18
14 31 081 4401 000	15.20
14 31 081 4402 000	15.20
14 31 081 5102 000	15.16
14 31 081 5106 000	15.18
14 31 081 5401 000	15.20
14 31 081 5402 000	15.20
14 31 081 6102 000	15.36
14 31 081 6402 000	15.40
14 31 081 7102 000	15.36
14 31 081 7106 000	15.38
14 31 081 7401 000	15.40
14 31 081 7402 000	15.40
14 31 091 3101 000	15.08
14 31 091 4102 000	15.16
14 31 091 4106 000	15.18
14 31 091 4401 000	15.20
14 31 091 4402 000	15.20
14 31 091 5102 000	15.16
14 31 091 5106 000	15.18
14 31 091 5401 000	15.20
14 31 091 5402 000	15.20
14 31 091 6102 000	15.36
14 31 091 6402 000	15.40
14 31 091 7102 000	15.36
14 31 091 7106 000	15.38
14 31 091 7401 000	15.40
14 31 091 7402 000	15.40
14 31 101 3101 000	15.08
14 31 101 4102 000	15.16
14 31 101 4106 000	15.18
14 31 101 4401 000	15.20
14 31 101 4402 000	15.20
14 31 101 5102 000	15.16
14 31 101 5106 000	15.18
14 31 101 5401 000	15.20
14 31 101 5402 000	15.20
14 31 101 6102 000	15.36
14 31 101 6402 000	15.40
14 31 101 7102 000	15.36
14 31 101 7106 000	15.38
14 31 101 7401 000	15.40
14 31 101 7402 000	15.40
14 31 111 3101 000	15.08
14 31 111 4102 000	15.16
14 31 111 4106 000	15.18
14 31 111 4401 000	15.20
14 31 111 4402 000	15.20
14 31 111 5102 000	15.16
14 31 111 5106 000	15.18
14 31 111 5401 000	15.20
14 31 111 5402 000	15.20
14 31 111 6102 000	15.36
14 31 111 6402 000	15.40
14 31 111 7102 000	15.36
14 31 111 7106 000	15.38
14 31 111 7401 000	15.40
14 31 111 7402 000	15.40
14 31 121 3101 000	15.08
14 31 121 4102 000	15.16
14 31 121 4106 000	15.18
14 31 121 4401 000	15.20
14 31 121 4402 000	15.20
14 31 121 5102 000	15.16
14 31 121 5106 000	15.18
14 31 121 5401 000	15.20
14 31 121 5402 000	15.20
14 31 121 6102 000	15.36
14 31 121 6402 000	15.40
14 31 121 7102 000	15.36
14 31 121 7106 000	15.38
14 31 121 7401 000	15.40
14 31 121 7402 000	15.40
14 31 131 4102 000	15.16
14 31 131 4106 000	15.18
14 31 131 4401 000	15.20
14 31 131 4402 000	15.20
14 31 131 5102 000	15.16
14 31 131 5106 000	15.18
14 31 131 5401 000	15.20
14 31 131 5402 000	15.20
14 31 131 6102 000	15.36
14 31 131 6402 000	15.40
14 31 131 7102 000	15.36
14 31 131 7106 000	15.38
14 31 131 7401 000	15.40
14 31 131 7402 000	15.40
14 31 141 4102 000	15.16
14 31 141 4106 000	15.18
14 31 141 4401 000	15.20
14 31 141 4402 000	15.20
14 31 141 5102 000	15.16
14 31 141 5106 000	15.18
14 31 141 5401 000	15.20
14 31 141 5402 000	15.20
14 31 141 6102 000	15.36
14 31 141 6402 000	15.40
14 31 141 7102 000	15.36
14 31 141 7106 000	15.38
14 31 141 7401 000	15.40
14 31 141 7402 000	15.40
14 31 151 4102 000	15.16
14 31 151 4106 000	15.18
14 31 151 4401 000	15.20
14 31 151 4402 000	15.20
14 31 151 5102 000	15.16
14 31 151 5106 000	15.18
14 31 151 5401 000	15.20
14 31 151 5402 000	15.20
14 31 151 6102 000	15.36
14 31 151 6402 000	15.40
14 31 151 7102 000	15.36
14 31 151 7106 000	15.38
14 31 151 7401 000	15.40
14 31 151 7402 000	15.40
14 31 161 4102 000	15.16
14 31 161 4106 000	15.18
14 31 161 4401 000	15.20
14 31 161 4402 000	15.20
14 31 161 5102 000	15.16
14 31 161 5106 000	15.18
14 31 161 5401 000	15.20
14 31 161 5402 000	15.20
14 31 161 6102 000	15.36
14 31 161 6402 000	15.40
14 31 161 7102 000	15.36
14 31 161 7106 000	15.38
14 31 161 7401 000	15.40
14 31 161 7402 000	15.40
14 31 171 4102 000	15.16
14 31 171 4106 000	15.18
14 31 171 4401 000	15.20
14 31 171 4402 000	15.20
14 31 171 5102 000	15.16
14 31 171 5106 000	15.18
14 31 171 5402 000	15.20
14 31 171 6102 000	15.36
14 31 171 6402 000	15.40
14 31 171 7102 000	15.36
14 31 171 7106 000	15.38
14 31 171 7401 000	15.40
14 31 171 7402 000	15.40
14 31 181 4102 000	15.16
14 31 181 4106 000	15.18
14 31 181 4401 000	15.20

List of part numbers

Part number	Page
14 31 181 4402 000	15.20
14 31 181 5102 000	15.16
14 31 181 5106 000	15.18
14 31 181 5402 000	15.20
14 31 181 6102 000	15.36
14 31 181 6402 000	15.40
14 31 181 7102 000	15.36
14 31 181 7106 000	15.38
14 31 181 7401 000	15.40
14 31 181 7402 000	15.40
14 31 191 4102 000	15.16
14 31 191 4106 000	15.18
14 31 191 4401 000	15.20
14 31 191 4402 000	15.20
14 31 191 5102 000	15.16
14 31 191 5106 000	15.18
14 31 191 5402 000	15.20
14 31 191 6402 000	15.40
14 31 191 7401 000	15.40
14 31 191 7402 000	15.40
14 31 201 4102 000	15.16
14 31 201 4106 000	15.18
14 31 201 4401 000	15.20
14 31 201 4402 000	15.20
14 31 201 5102 000	15.16
14 31 201 5106 000	15.18
14 31 201 5402 000	15.20
14 31 201 6402 000	15.40
14 31 201 7401 000	15.40
14 31 201 7402 000	15.40
14 31 211 4106 000	15.18
14 31 211 4401 000	15.20
14 31 211 4402 000	15.20
14 31 211 5102 000	15.16
14 31 211 5106 000	15.18
14 31 211 5402 000	15.20
14 31 211 6402 000	15.40
14 31 211 7401 000	15.40
14 31 211 7402 000	15.40
14 31 221 4106 000	15.18
14 31 221 4401 000	15.20
14 31 221 4402 000	15.20
14 31 221 5102 000	15.16
14 31 221 5106 000	15.18
14 31 221 5402 000	15.20
14 31 221 6402 000	15.40
14 31 221 7401 000	15.40
14 31 221 7402 000	15.40
14 31 231 4401 000	15.20
14 31 231 4402 000	15.20
14 31 231 5102 000	15.16
14 31 231 5402 000	15.20
14 31 231 6402 000	15.40
14 31 231 7401 000	15.40
14 31 231 7402 000	15.40
14 31 241 4401 000	15.20
14 31 241 4402 000	15.20
14 31 241 5102 000	15.16
14 31 241 5402 000	15.20
14 31 241 6402 000	15.40
14 31 241 7401 000	15.40
14 31 241 7402 000	15.40
14 31 251 4401 000	15.20
14 31 251 4402 000	15.20
14 31 251 5102 000	15.16
14 31 251 5402 000	15.20
14 31 251 6402 000	15.40
14 31 251 7401 000	15.40
14 31 251 7402 000	15.40
14 95 000 0050 000	15.16
14 95 000 0050 000	15.18
14 95 000 0050 000	15.20
14 95 000 0051 000	15.42
14 95 000 0051 000	15.44
14 95 000 0051 000	15.46
14 95 000 0052 000	15.22
14 95 000 0052 000	15.24
14 95 000 0052 000	15.26
14 95 000 0052 000	15.36
14 95 000 0052 000	15.38
14 95 000 0052 000	15.40
14 99 000 0001	15.06
14 99 000 0001	15.08
14 99 000 0002	15.04
15 01 040 4601 040	13.06
15 01 040 4601 042	13.06
15 01 040 4601 333	13.06
15 02 100 4601 040	13.07
15 02 100 4601 042	13.07
15 02 100 4601 333	13.07
15 11 006 2601 000	14.08
15 11 006 2601 333	14.08
15 11 006 5601 000	14.08
15 11 006 5601 333	14.08
15 11 006 6601 000	14.08
15 11 006 6601 333	14.08
15 11 008 2601 000	14.08
15 11 008 2601 333	14.08
15 11 008 5601 000	14.08
15 11 008 5601 333	14.08
15 11 008 6601 000	14.08
15 11 008 6601 333	14.08
15 11 010 2601 000	14.08
15 11 010 2601 333	14.08
15 11 010 5601 000	14.08
15 11 010 5601 333	14.08
15 11 010 6601 000	14.08
15 11 010 6601 333	14.08
15 11 012 2601 000	14.08
15 11 012 2601 333	14.08
15 11 012 5601 000	14.08
15 11 012 5601 333	14.08
15 11 012 6601 000	14.08
15 11 012 6601 333	14.08
15 11 014 2601 000	14.08
15 11 014 2601 333	14.08
15 11 014 5601 000	14.08
15 11 014 5601 333	14.08
15 11 014 6601 000	14.08
15 11 014 6601 333	14.08
15 11 016 2601 000	14.08
15 11 016 2601 333	14.08
15 11 016 5601 000	14.08
15 11 016 5601 333	14.08
15 11 016 6601 000	14.08
15 11 016 6601 333	14.08
15 11 018 2601 000	14.08
15 11 018 2601 333	14.08
15 11 018 5601 000	14.08
15 11 018 5601 333	14.08
15 11 018 6601 000	14.08
15 11 018 6601 333	14.08
15 11 020 2601 000	14.08
15 11 020 2601 333	14.08
15 11 020 5601 000	14.08
15 11 020 5601 333	14.08
15 11 020 6601 000	14.08
15 11 020 6601 333	14.08
15 11 022 2601 000	14.08
15 11 022 2601 333	14.08
15 11 022 5601 000	14.08
15 11 022 5601 333	14.08
15 11 022 6601 000	14.08
15 11 022 6601 333	14.08
15 11 024 2601 000	14.08
15 11 024 2601 333	14.08
15 11 024 5601 000	14.08
15 11 024 5601 333	14.08
15 11 024 6601 000	14.08
15 11 024 6601 333	14.08
15 11 026 2601 000	14.08
15 11 026 2601 333	14.08
15 11 026 5601 000	14.08
15 11 026 5601 333	14.08
15 11 026 6601 000	14.08
15 11 026 6601 333	14.08
15 11 028 2601 000	14.08
15 11 028 2601 333	14.08
15 11 028 5601 000	14.08
15 11 028 5601 333	14.08
15 11 028 6601 000	14.08
15 11 028 6601 333	14.08
15 11 030 2601 000	14.08
15 11 030 2601 333	14.08
15 11 030 5601 000	14.08
15 11 030 5601 333	14.08
15 11 030 6601 000	14.08
15 11 030 6601 333	14.08
15 11 032 2601 000	14.08
15 11 032 2601 333	14.08
15 11 032 5601 000	14.08
15 11 032 5601 333	14.08
15 11 032 6601 000	14.08
15 11 032 6601 333	14.08
15 11 034 2601 000	14.08
15 11 034 2601 333	14.08
15 11 034 5601 000	14.08
15 11 034 5601 333	14.08
15 11 034 6601 000	14.08
15 11 034 6601 333	14.08
15 11 036 2601 000	14.08
15 11 036 2601 333	14.08
15 11 036 5601 000	14.08
15 11 036 5601 333	14.08
15 11 036 6601 000	14.08
15 11 036 6601 333	14.08
15 11 038 2601 000	14.08
15 11 038 2601 333	14.08
15 11 038 5601 000	14.08
15 11 038 5601 333	14.08
15 11 038 6601 000	14.08
15 11 038 6601 333	14.08
15 11 040 2601 000	14.08
15 11 040 2601 333	14.08
15 11 040 5601 000	14.08
15 11 040 5601 333	14.08
15 11 040 6601 000	14.08
15 11 040 6601 333	14.08
15 11 042 2601 000	14.08
15 11 042 2601 333	14.08
15 11 042 5601 000	14.08
15 11 042 5601 333	14.08
15 11 042 6601 000	14.08
15 11 042 6601 333	14.08
15 11 044 2601 000	14.08
15 11 044 2601 333	14.08
15 11 044 5601 000	14.08
15 11 044 5601 333	14.08
15 11 044 6601 000	14.08
15 11 044 6601 333	14.08
15 11 046 2601 000	14.08
15 11 046 2601 333	14.08
15 11 046 5601 000	14.08
15 11 046 5601 333	14.08
15 11 046 6601 000	14.08
15 11 046 6601 333	14.08
15 11 048 2601 000	14.08
15 11 048 2601 333	14.08
15 11 048 5601 000	14.08
15 11 048 5601 333	14.08
15 11 048 6601 000	14.08
15 11 048 6601 333	14.08
15 11 050 2601 000	14.08
15 11 050 2601 333	14.08
15 11 050 5601 000	14.08
15 11 050 5601 333	14.08
15 11 050 6601 000	14.08
15 11 050 6601 333	14.08
15 11 052 2601 000	14.08
15 11 052 2601 333	14.08
15 11 052 5601 000	14.08
15 11 052 5601 333	14.08
15 11 052 6601 000	14.08
15 11 052 6601 333	14.08
15 11 054 2601 000	14.08
15 11 054 2601 333	14.08
15 11 054 5601 000	14.08
15 11 054 5601 333	14.08
15 11 054 6601 000	14.08
15 11 054 6601 333	14.08
15 11 056 2601 000	14.08
15 11 056 2601 333	14.08
15 11 056 5601 000	14.08
15 11 056 5601 333	14.08
15 11 056 6601 000	14.08
15 11 056 6601 333	14.08
15 11 058 2601 000	14.08
15 11 058 2601 333	14.08
15 11 058 5601 000	14.08
15 11 058 5601 333	14.08
15 11 058 6601 000	14.08
15 11 058 6601 333	14.08
15 11 060 2601 000	14.08
15 11 060 2601 333	14.08
15 11 060 5601 000	14.08
15 11 060 5601 333	14.08
15 11 060 6601 000	14.08
15 11 060 6601 333	14.08
15 11 062 2601 000	14.08
15 11 062 2601 333	14.08
15 11 062 5601 000	14.08
15 11 062 5601 333	14.08
15 11 062 6601 000	14.08
15 11 062 6601 333	14.08
15 11 064 2601 000	14.08
15 11 064 2601 333	14.08
15 11 064 5601 000	14.08
15 11 064 5601 333	14.08

List of part numbers

Part number	Page
15 11 064 6601 000	14.08
15 11 064 6601 333	14.08
15 11 066 2601 000	14.08
15 11 066 2601 333	14.08
15 11 066 5601 000	14.08
15 11 066 5601 333	14.08
15 11 066 6601 000	14.08
15 11 066 6601 333	14.08
15 11 068 2601 000	14.08
15 11 068 2601 333	14.08
15 11 068 5601 000	14.08
15 11 068 5601 333	14.08
15 11 068 6601 000	14.08
15 11 068 6601 333	14.08
15 11 070 2601 000	14.08
15 11 070 2601 333	14.08
15 11 070 5601 000	14.08
15 11 070 5601 333	14.08
15 11 070 6601 000	14.08
15 11 070 6601 333	14.08
15 11 072 2601 000	14.08
15 11 072 2601 333	14.08
15 11 072 5601 000	14.08
15 11 072 5601 333	14.08
15 11 072 6601 000	14.08
15 11 072 6601 333	14.08
15 11 074 2601 000	14.08
15 11 074 2601 333	14.08
15 11 074 5601 000	14.08
15 11 074 5601 333	14.08
15 11 074 6601 000	14.08
15 11 074 6601 333	14.08
15 11 076 2601 000	14.08
15 11 076 2601 333	14.08
15 11 076 5601 000	14.08
15 11 076 5601 333	14.08
15 11 076 6601 000	14.08
15 11 076 6601 333	14.08
15 11 078 2601 000	14.08
15 11 078 2601 333	14.08
15 11 078 5601 000	14.08
15 11 078 5601 333	14.08
15 11 078 6601 000	14.08
15 11 078 6601 333	14.08
15 11 080 2601 000	14.08
15 11 080 2601 333	14.08
15 11 080 5601 000	14.08
15 11 080 5601 333	14.08
15 11 080 6601 000	14.08
15 11 080 6601 333	14.08
15 11 082 2601 000	14.08
15 11 082 2601 333	14.08
15 11 082 5601 000	14.08
15 11 082 5601 333	14.08
15 11 082 6601 000	14.08
15 11 082 6601 333	14.08
15 11 084 2601 000	14.08
15 11 084 2601 333	14.08
15 11 084 5601 000	14.08
15 11 084 5601 333	14.08
15 11 084 6601 000	14.08
15 11 084 6601 333	14.08
15 11 086 2601 000	14.08
15 11 086 2601 333	14.08
15 11 086 5601 000	14.08
15 11 086 5601 333	14.08
15 11 086 6601 000	14.08
15 11 086 6601 333	14.08
15 11 088 2601 000	14.08
15 11 088 2601 333	14.08
15 11 088 5601 000	14.08
15 11 088 5601 333	14.08
15 11 088 6601 000	14.08
15 11 088 6601 333	14.08
15 11 090 2601 000	14.08
15 11 090 2601 333	14.08
15 11 090 5601 000	14.08
15 11 090 5601 333	14.08
15 11 090 6601 000	14.08
15 11 090 6601 333	14.08
15 11 092 2601 000	14.08
15 11 092 2601 333	14.08
15 11 092 5601 000	14.08
15 11 092 5601 333	14.08
15 11 092 6601 000	14.08
15 11 092 6601 333	14.08
15 11 094 2601 000	14.08
15 11 094 2601 333	14.08
15 11 094 5601 000	14.08
15 11 094 5601 333	14.08
15 11 094 6601 000	14.08
15 11 094 6601 333	14.08
15 11 096 2601 000	14.08
15 11 096 2601 333	14.08
15 11 096 5601 000	14.08
15 11 096 5601 333	14.08
15 11 096 6601 000	14.08
15 11 096 6601 333	14.08
15 11 098 2601 000	14.08
15 11 098 2601 333	14.08
15 11 098 5601 000	14.08
15 11 098 5601 333	14.08
15 11 098 6601 000	14.08
15 11 098 6601 333	14.08
15 11 100 2601 000	14.08
15 11 100 2601 333	14.08
15 11 100 5601 000	14.08
15 11 100 5601 333	14.08
15 11 100 6601 000	14.08
15 11 100 6601 333	14.08
15 12 006 2601 000	14.08
15 12 006 2601 333	14.08
15 12 006 5601 000	14.08
15 12 006 5601 333	14.08
15 12 006 6601 000	14.08
15 12 006 6601 333	14.08
15 12 008 2601 000	14.08
15 12 008 2601 333	14.08
15 12 008 5601 000	14.08
15 12 008 5601 333	14.08
15 12 008 6601 000	14.08
15 12 008 6601 333	14.08
15 12 010 2601 000	14.08
15 12 010 2601 333	14.08
15 12 010 5601 000	14.08
15 12 010 5601 333	14.08
15 12 010 6601 000	14.08
15 12 010 6601 333	14.08
15 12 012 2601 000	14.08
15 12 012 2601 333	14.08
15 12 012 5601 000	14.08
15 12 012 5601 333	14.08
15 12 012 6601 000	14.08
15 12 012 6601 333	14.08
15 12 014 2601 000	14.08
15 12 014 2601 333	14.08
15 12 014 5601 000	14.08
15 12 014 5601 333	14.08
15 12 014 6601 000	14.08
15 12 014 6601 333	14.08
15 12 016 2601 000	14.08
15 12 016 2601 333	14.08
15 12 016 5601 000	14.08
15 12 016 5601 333	14.08
15 12 016 6601 000	14.08
15 12 016 6601 333	14.08
15 12 018 2601 000	14.08
15 12 018 2601 333	14.08
15 12 018 5601 000	14.08
15 12 018 5601 333	14.08
15 12 018 6601 000	14.08
15 12 018 6601 333	14.08
15 12 020 2601 000	14.08
15 12 020 2601 333	14.08
15 12 020 5601 000	14.08
15 12 020 5601 333	14.08
15 12 020 6601 000	14.08
15 12 020 6601 333	14.08
15 12 022 2601 000	14.08
15 12 022 2601 333	14.08
15 12 022 5601 000	14.08
15 12 022 5601 333	14.08
15 12 022 6601 000	14.08
15 12 022 6601 333	14.08
15 12 024 2601 000	14.08
15 12 024 2601 333	14.08
15 12 024 5601 000	14.08
15 12 024 5601 333	14.08
15 12 024 6601 000	14.08
15 12 024 6601 333	14.08
15 12 026 2601 000	14.08
15 12 026 2601 333	14.08
15 12 026 5601 000	14.08
15 12 026 5601 333	14.08
15 12 026 6601 000	14.08
15 12 026 6601 333	14.08
15 12 028 2601 000	14.08
15 12 028 2601 333	14.08
15 12 028 5601 000	14.08
15 12 028 5601 333	14.08
15 12 028 6601 000	14.08
15 12 028 6601 333	14.08
15 12 030 2601 000	14.08
15 12 030 2601 333	14.08
15 12 030 5601 000	14.08
15 12 030 5601 333	14.08
15 12 030 6601 000	14.08
15 12 030 6601 333	14.08
15 12 032 2601 000	14.08
15 12 032 2601 333	14.08
15 12 032 5601 000	14.08
15 12 032 5601 333	14.08
15 12 032 6601 000	14.08
15 12 032 6601 333	14.08
15 12 034 2601 000	14.08
15 12 034 2601 333	14.08
15 12 034 5601 000	14.08
15 12 034 5601 333	14.08
15 12 034 6601 000	14.08
15 12 034 6601 333	14.08
15 12 036 2601 000	14.08
15 12 036 2601 333	14.08
15 12 036 5601 000	14.08
15 12 036 5601 333	14.08
15 12 036 6601 000	14.08
15 12 036 6601 333	14.08
15 12 038 2601 000	14.08
15 12 038 2601 333	14.08
15 12 038 5601 000	14.08
15 12 038 5601 333	14.08
15 12 038 6601 000	14.08
15 12 038 6601 333	14.08
15 12 040 2601 000	14.08
15 12 040 2601 333	14.08
15 12 040 5601 000	14.08
15 12 040 5601 333	14.08
15 12 040 6601 000	14.08
15 12 040 6601 333	14.08
15 12 042 2601 000	14.08
15 12 042 2601 333	14.08
15 12 042 5601 000	14.08
15 12 042 5601 333	14.08
15 12 042 6601 000	14.08
15 12 042 6601 333	14.08
15 12 044 2601 000	14.08
15 12 044 2601 333	14.08
15 12 044 5601 000	14.08
15 12 044 5601 333	14.08
15 12 044 6601 000	14.08
15 12 044 6601 333	14.08
15 12 046 2601 000	14.08
15 12 046 2601 333	14.08
15 12 046 5601 000	14.08
15 12 046 5601 333	14.08
15 12 046 6601 000	14.08
15 12 046 6601 333	14.08
15 12 048 2601 000	14.08
15 12 048 2601 333	14.08
15 12 048 5601 000	14.08
15 12 048 5601 333	14.08
15 12 048 6601 000	14.08
15 12 048 6601 333	14.08
15 12 050 2601 000	14.08
15 12 050 2601 333	14.08
15 12 050 5601 000	14.08
15 12 050 5601 333	14.08
15 12 050 6601 000	14.08
15 12 050 6601 333	14.08
15 12 052 2601 000	14.08
15 12 052 2601 333	14.08
15 12 052 5601 000	14.08
15 12 052 5601 333	14.08
15 12 052 6601 000	14.08
15 12 052 6601 333	14.08
15 12 054 2601 000	14.08
15 12 054 2601 333	14.08
15 12 054 5601 000	14.08
15 12 054 5601 333	14.08
15 12 054 6601 000	14.08
15 12 054 6601 333	14.08
15 12 056 2601 000	14.08
15 12 056 2601 333	14.08
15 12 056 5601 000	14.08
15 12 056 5601 333	14.08
15 12 056 6601 000	14.08
15 12 056 6601 333	14.08
15 12 058 2601 000	14.08
15 12 058 2601 333	14.08

List of part numbers

Part number	Page
15 12 058 5601 000	14.08
15 12 058 5601 333	14.08
15 12 058 6601 000	14.08
15 12 058 6601 333	14.08
15 12 060 2601 000	14.08
15 12 060 2601 333	14.08
15 12 060 5601 000	14.08
15 12 060 5601 333	14.08
15 12 060 6601 000	14.08
15 12 060 6601 333	14.08
15 12 062 2601 000	14.08
15 12 062 2601 333	14.08
15 12 062 5601 000	14.08
15 12 062 5601 333	14.08
15 12 062 6601 000	14.08
15 12 062 6601 333	14.08
15 12 064 2601 000	14.08
15 12 064 2601 333	14.08
15 12 064 5601 000	14.08
15 12 064 5601 333	14.08
15 12 064 6601 000	14.08
15 12 064 6601 333	14.08
15 12 066 2601 000	14.08
15 12 066 2601 333	14.08
15 12 066 5601 000	14.08
15 12 066 5601 333	14.08
15 12 066 6601 000	14.08
15 12 066 6601 333	14.08
15 12 068 2601 000	14.08
15 12 068 2601 333	14.08
15 12 068 5601 000	14.08
15 12 068 5601 333	14.08
15 12 068 6601 000	14.08
15 12 068 6601 333	14.08
15 12 070 2601 000	14.08
15 12 070 2601 333	14.08
15 12 070 5601 000	14.08
15 12 070 5601 333	14.08
15 12 070 6601 000	14.08
15 12 070 6601 333	14.08
15 12 072 2601 000	14.08
15 12 072 2601 333	14.08
15 12 072 5601 000	14.08
15 12 072 5601 333	14.08
15 12 072 6601 000	14.08
15 12 072 6601 333	14.08
15 12 074 2601 000	14.08
15 12 074 2601 333	14.08
15 12 074 5601 000	14.08
15 12 074 5601 333	14.08
15 12 074 6601 000	14.08
15 12 074 6601 333	14.08
15 12 076 2601 000	14.08
15 12 076 2601 333	14.08
15 12 076 5601 000	14.08
15 12 076 5601 333	14.08
15 12 076 6601 000	14.08
15 12 076 6601 333	14.08
15 12 078 2601 000	14.08
15 12 078 2601 333	14.08
15 12 078 5601 000	14.08
15 12 078 5601 333	14.08
15 12 078 6601 000	14.08
15 12 078 6601 333	14.08
15 12 080 2601 000	14.08
15 12 080 2601 333	14.08
15 12 080 5601 000	14.08
15 12 080 5601 333	14.08
15 12 080 6601 000	14.08
15 12 080 6601 333	14.08
15 12 082 2601 000	14.08
15 12 082 2601 333	14.08
15 12 082 5601 000	14.08
15 12 082 5601 333	14.08
15 12 082 6601 000	14.08
15 12 082 6601 333	14.08
15 12 084 2601 000	14.08
15 12 084 2601 333	14.08
15 12 084 5601 000	14.08
15 12 084 5601 333	14.08
15 12 084 6601 000	14.08
15 12 084 6601 333	14.08
15 12 086 2601 000	14.08
15 12 086 2601 333	14.08
15 12 086 5601 000	14.08
15 12 086 5601 333	14.08
15 12 086 6601 000	14.08
15 12 086 6601 333	14.08
15 12 088 2601 000	14.08
15 12 088 2601 333	14.08
15 12 088 5601 000	14.08
15 12 088 5601 333	14.08
15 12 088 6601 000	14.08
15 12 088 6601 333	14.08
15 12 090 2601 000	14.08
15 12 090 2601 333	14.08
15 12 090 5601 000	14.08
15 12 090 5601 333	14.08
15 12 090 6601 000	14.08
15 12 090 6601 333	14.08
15 12 092 2601 000	14.08
15 12 092 2601 333	14.08
15 12 092 5601 000	14.08
15 12 092 5601 333	14.08
15 12 092 6601 000	14.08
15 12 092 6601 333	14.08
15 12 094 2601 000	14.08
15 12 094 2601 333	14.08
15 12 094 5601 000	14.08
15 12 094 5601 333	14.08
15 12 094 6601 000	14.08
15 12 094 6601 333	14.08
15 12 096 2601 000	14.08
15 12 096 2601 333	14.08
15 12 096 5601 000	14.08
15 12 096 5601 333	14.08
15 12 096 6601 000	14.08
15 12 096 6601 333	14.08
15 12 098 2601 000	14.08
15 12 098 2601 333	14.08
15 12 098 5601 000	14.08
15 12 098 5601 333	14.08
15 12 098 6601 000	14.08
15 12 098 6601 333	14.08
15 12 100 2601 000	14.08
15 12 100 2601 333	14.08
15 12 100 5601 000	14.08
15 12 100 5601 333	14.08
15 12 100 6601 000	14.08
15 12 100 6601 333	14.08
15 15 006 2601 000	14.12
15 15 006 2601 333	14.12
15 15 006 5601 000	14.12
15 15 006 5601 333	14.12
15 15 006 6601 000	14.12
15 15 006 6601 333	14.12
15 15 008 2601 000	14.12
15 15 008 2601 333	14.12
15 15 008 5601 000	14.12
15 15 008 5601 333	14.12
15 15 008 6601 000	14.12
15 15 008 6601 333	14.12
15 15 010 2601 000	14.12
15 15 010 2601 333	14.12
15 15 010 5601 000	14.12
15 15 010 5601 333	14.12
15 15 010 6601 000	14.12
15 15 010 6601 333	14.12
15 15 012 2601 000	14.12
15 15 012 2601 333	14.12
15 15 012 5601 000	14.12
15 15 012 5601 333	14.12
15 15 012 6601 000	14.12
15 15 012 6601 333	14.12
15 15 014 2601 000	14.12
15 15 014 2601 333	14.12
15 15 014 5601 000	14.12
15 15 014 5601 333	14.12
15 15 014 6601 000	14.12
15 15 014 6601 333	14.12
15 15 016 2601 000	14.12
15 15 016 2601 333	14.12
15 15 016 5601 000	14.12
15 15 016 5601 333	14.12
15 15 016 6601 000	14.12
15 15 016 6601 333	14.12
15 15 018 2601 000	14.12
15 15 018 2601 333	14.12
15 15 018 5601 000	14.12
15 15 018 5601 333	14.12
15 15 018 6601 000	14.12
15 15 018 6601 333	14.12
15 15 020 2601 000	14.12
15 15 020 2601 333	14.12
15 15 020 5601 000	14.12
15 15 020 5601 333	14.12
15 15 020 6601 000	14.12
15 15 020 6601 333	14.12
15 15 022 2601 000	14.12
15 15 022 2601 333	14.12
15 15 022 5601 000	14.12
15 15 022 5601 333	14.12
15 15 022 6601 000	14.12
15 15 022 6601 333	14.12
15 15 024 2601 000	14.12
15 15 024 2601 333	14.12
15 15 024 5601 000	14.12
15 15 024 5601 333	14.12
15 15 024 6601 000	14.12
15 15 024 6601 333	14.12
15 15 026 2601 000	14.12
15 15 026 2601 333	14.12
15 15 026 5601 000	14.12
15 15 026 5601 333	14.12
15 15 026 6601 000	14.12
15 15 026 6601 333	14.12
15 15 028 2601 000	14.12
15 15 028 2601 333	14.12
15 15 028 5601 000	14.12
15 15 028 5601 333	14.12
15 15 028 6601 000	14.12
15 15 028 6601 333	14.12
15 15 030 2601 000	14.12
15 15 030 2601 333	14.12
15 15 030 5601 000	14.12
15 15 030 5601 333	14.12
15 15 030 6601 000	14.12
15 15 030 6601 333	14.12
15 15 032 2601 000	14.12
15 15 032 2601 333	14.12
15 15 032 5601 000	14.12
15 15 032 5601 333	14.12
15 15 032 6601 000	14.12
15 15 032 6601 333	14.12
15 15 034 2601 000	14.12
15 15 034 2601 333	14.12
15 15 034 5601 000	14.12
15 15 034 5601 333	14.12
15 15 034 6601 000	14.12
15 15 034 6601 333	14.12
15 15 036 2601 000	14.12
15 15 036 2601 333	14.12
15 15 036 5601 000	14.12
15 15 036 5601 333	14.12
15 15 036 6601 000	14.12
15 15 036 6601 333	14.12
15 15 038 2601 000	14.12
15 15 038 2601 333	14.12
15 15 038 5601 000	14.12
15 15 038 5601 333	14.12
15 15 038 6601 000	14.12
15 15 038 6601 333	14.12
15 15 040 2601 000	14.12
15 15 040 2601 333	14.12
15 15 040 5601 000	14.12
15 15 040 5601 333	14.12
15 15 040 6601 000	14.12
15 15 040 6601 333	14.12
15 15 042 2601 000	14.12
15 15 042 2601 333	14.12
15 15 042 5601 000	14.12
15 15 042 5601 333	14.12
15 15 042 6601 000	14.12
15 15 042 6601 333	14.12
15 15 044 2601 000	14.12
15 15 044 2601 333	14.12
15 15 044 5601 000	14.12
15 15 044 5601 333	14.12
15 15 044 6601 000	14.12
15 15 044 6601 333	14.12
15 15 046 2601 000	14.12
15 15 046 2601 333	14.12
15 15 046 5601 000	14.12
15 15 046 5601 333	14.12
15 15 046 6601 000	14.12
15 15 046 6601 333	14.12
15 15 048 2601 000	14.12
15 15 048 2601 333	14.12
15 15 048 5601 000	14.12
15 15 048 5601 333	14.12
15 15 048 6601 000	14.12
15 15 048 6601 333	14.12
15 15 050 2601 000	14.12
15 15 050 2601 333	14.12
15 15 050 5601 000	14.12
15 15 050 5601 333	14.12
15 15 050 6601 000	14.12
15 15 050 6601 333	14.12

List of part numbers

Part number	Page
15 15 052 2601 000	14.12
15 15 052 2601 333	14.12
15 15 052 5601 000	14.12
15 15 052 5601 333	14.12
15 15 052 6601 000	14.12
15 15 052 6601 333	14.12
15 15 054 2601 000	14.12
15 15 054 2601 333	14.12
15 15 054 5601 000	14.12
15 15 054 5601 333	14.12
15 15 054 6601 000	14.12
15 15 054 6601 333	14.12
15 15 056 2601 000	14.12
15 15 056 2601 333	14.12
15 15 056 5601 000	14.12
15 15 056 5601 333	14.12
15 15 056 6601 000	14.12
15 15 056 6601 333	14.12
15 15 058 2601 000	14.12
15 15 058 2601 333	14.12
15 15 058 5601 000	14.12
15 15 058 5601 333	14.12
15 15 058 6601 000	14.12
15 15 058 6601 333	14.12
15 15 060 2601 000	14.12
15 15 060 2601 333	14.12
15 15 060 5601 000	14.12
15 15 060 5601 333	14.12
15 15 060 6601 000	14.12
15 15 060 6601 333	14.12
15 15 062 2601 000	14.12
15 15 062 2601 333	14.12
15 15 062 5601 000	14.12
15 15 062 5601 333	14.12
15 15 062 6601 000	14.12
15 15 062 6601 333	14.12
15 15 064 2601 000	14.12
15 15 064 2601 333	14.12
15 15 064 5601 000	14.12
15 15 064 5601 333	14.12
15 15 064 6601 000	14.12
15 15 064 6601 333	14.12
15 15 066 2601 000	14.12
15 15 066 2601 333	14.12
15 15 066 5601 000	14.12
15 15 066 5601 333	14.12
15 15 066 6601 000	14.12
15 15 066 6601 333	14.12
15 15 068 2601 000	14.12
15 15 068 2601 333	14.12
15 15 068 5601 000	14.12
15 15 068 5601 333	14.12
15 15 068 6601 000	14.12
15 15 068 6601 333	14.12
15 15 070 2601 000	14.12
15 15 070 2601 333	14.12
15 15 070 5601 000	14.12
15 15 070 5601 333	14.12
15 15 070 6601 000	14.12
15 15 070 6601 333	14.12
15 15 072 2601 000	14.12
15 15 072 2601 333	14.12
15 15 072 5601 000	14.12
15 15 072 5601 333	14.12
15 15 072 6601 000	14.12
15 15 072 6601 333	14.12
15 15 074 2601 000	14.12
15 15 074 2601 333	14.12
15 15 074 5601 000	14.12
15 15 074 5601 333	14.12
15 15 074 6601 000	14.12
15 15 074 6601 333	14.12
15 15 076 2601 000	14.12
15 15 076 2601 333	14.12
15 15 076 5601 000	14.12
15 15 076 5601 333	14.12
15 15 076 6601 000	14.12
15 15 076 6601 333	14.12
15 15 078 2601 000	14.12
15 15 078 2601 333	14.12
15 15 078 5601 000	14.12
15 15 078 5601 333	14.12
15 15 078 6601 000	14.12
15 15 078 6601 333	14.12
15 15 080 2601 000	14.12
15 15 080 2601 333	14.12
15 15 080 5601 000	14.12
15 15 080 5601 333	14.12
15 15 080 6601 000	14.12
15 15 080 6601 333	14.12
15 15 082 2601 000	14.12
15 15 082 2601 333	14.12
15 15 082 5601 000	14.12
15 15 082 5601 333	14.12
15 15 082 6601 000	14.12
15 15 082 6601 333	14.12
15 15 084 2601 000	14.12
15 15 084 2601 333	14.12
15 15 084 5601 000	14.12
15 15 084 5601 333	14.12
15 15 084 6601 000	14.12
15 15 084 6601 333	14.12
15 15 086 2601 000	14.12
15 15 086 2601 333	14.12
15 15 086 5601 000	14.12
15 15 086 5601 333	14.12
15 15 086 6601 000	14.12
15 15 086 6601 333	14.12
15 15 088 2601 000	14.12
15 15 088 2601 333	14.12
15 15 088 5601 000	14.12
15 15 088 5601 333	14.12
15 15 088 6601 000	14.12
15 15 088 6601 333	14.12
15 15 090 2601 000	14.12
15 15 090 2601 333	14.12
15 15 090 5601 000	14.12
15 15 090 5601 333	14.12
15 15 090 6601 000	14.12
15 15 090 6601 333	14.12
15 15 092 2601 000	14.12
15 15 092 2601 333	14.12
15 15 092 5601 000	14.12
15 15 092 5601 333	14.12
15 15 092 6601 000	14.12
15 15 092 6601 333	14.12
15 15 094 2601 000	14.12
15 15 094 2601 333	14.12
15 15 094 5601 000	14.12
15 15 094 5601 333	14.12
15 15 094 6601 000	14.12
15 15 094 6601 333	14.12
15 15 096 2601 000	14.12
15 15 096 2601 333	14.12
15 15 096 5601 000	14.12
15 15 096 5601 333	14.12
15 15 096 6601 000	14.12
15 15 096 6601 333	14.12
15 15 098 2601 000	14.12
15 15 098 2601 333	14.12
15 15 098 5601 000	14.12
15 15 098 5601 333	14.12
15 15 098 6601 000	14.12
15 15 098 6601 333	14.12
15 15 100 2601 000	14.12
15 15 100 2601 333	14.12
15 15 100 5601 000	14.12
15 15 100 5601 333	14.12
15 15 100 6601 000	14.12
15 15 100 6601 333	14.12
15 21 006 2601 000	14.10
15 21 006 2601 333	14.10
15 21 006 5601 000	14.10
15 21 006 5601 333	14.10
15 21 006 6601 000	14.10
15 21 006 6601 333	14.10
15 21 008 2601 000	14.10
15 21 008 2601 333	14.10
15 21 008 5601 000	14.10
15 21 008 5601 333	14.10
15 21 008 6601 000	14.10
15 21 008 6601 333	14.10
15 21 010 2601 000	14.10
15 21 010 2601 333	14.10
15 21 010 5601 000	14.10
15 21 010 5601 333	14.10
15 21 010 6601 000	14.10
15 21 010 6601 333	14.10
15 21 012 2601 000	14.10
15 21 012 2601 333	14.10
15 21 012 5601 000	14.10
15 21 012 5601 333	14.10
15 21 012 6601 000	14.10
15 21 012 6601 333	14.10
15 21 014 2601 000	14.10
15 21 014 2601 333	14.10
15 21 014 5601 000	14.10
15 21 014 5601 333	14.10
15 21 014 6601 000	14.10
15 21 014 6601 333	14.10
15 21 016 2601 000	14.10
15 21 016 2601 333	14.10
15 21 016 5601 000	14.10
15 21 016 5601 333	14.10
15 21 016 6601 000	14.10
15 21 016 6601 333	14.10
15 21 018 2601 000	14.10
15 21 018 2601 333	14.10
15 21 018 5601 000	14.10
15 21 018 5601 333	14.10
15 21 018 6601 000	14.10
15 21 018 6601 333	14.10
15 21 020 2601 000	14.10
15 21 020 2601 333	14.10
15 21 020 5601 000	14.10
15 21 020 5601 333	14.10
15 21 020 6601 000	14.10
15 21 020 6601 333	14.10
15 21 022 2601 000	14.10
15 21 022 2601 333	14.10
15 21 022 5601 000	14.10
15 21 022 5601 333	14.10
15 21 022 6601 000	14.10
15 21 022 6601 333	14.10
15 21 024 2601 000	14.10
15 21 024 2601 333	14.10
15 21 024 5601 000	14.10
15 21 024 5601 333	14.10
15 21 024 6601 000	14.10
15 21 024 6601 333	14.10
15 21 026 2601 000	14.10
15 21 026 2601 333	14.10
15 21 026 5601 000	14.10
15 21 026 5601 333	14.10
15 21 026 6601 000	14.10
15 21 026 6601 333	14.10
15 21 028 2601 000	14.10
15 21 028 2601 333	14.10
15 21 028 5601 000	14.10
15 21 028 5601 333	14.10
15 21 028 6601 000	14.10
15 21 028 6601 333	14.10
15 21 030 2601 000	14.10
15 21 030 2601 333	14.10
15 21 030 5601 000	14.10
15 21 030 5601 333	14.10
15 21 030 6601 000	14.10
15 21 030 6601 333	14.10
15 21 032 2601 000	14.10
15 21 032 2601 333	14.10
15 21 032 5601 000	14.10
15 21 032 5601 333	14.10
15 21 032 6601 000	14.10
15 21 032 6601 333	14.10
15 21 034 2601 000	14.10
15 21 034 2601 333	14.10
15 21 034 5601 000	14.10
15 21 034 5601 333	14.10
15 21 034 6601 000	14.10
15 21 034 6601 333	14.10
15 21 036 2601 000	14.10
15 21 036 2601 333	14.10
15 21 036 5601 000	14.10
15 21 036 5601 333	14.10
15 21 036 6601 000	14.10
15 21 036 6601 333	14.10
15 21 038 2601 000	14.10
15 21 038 2601 333	14.10
15 21 038 5601 000	14.10
15 21 038 5601 333	14.10
15 21 038 6601 000	14.10
15 21 038 6601 333	14.10
15 21 040 2601 000	14.10
15 21 040 2601 333	14.10
15 21 040 5601 000	14.10
15 21 040 5601 333	14.10
15 21 040 6601 000	14.10
15 21 040 6601 333	14.10
15 21 042 2601 000	14.10
15 21 042 2601 333	14.10
15 21 042 5601 000	14.10
15 21 042 5601 333	14.10
15 21 042 6601 000	14.10
15 21 042 6601 333	14.10
15 21 044 2601 000	14.10
15 21 044 2601 333	14.10
15 21 044 5601 000	14.10
15 21 044 5601 333	14.10
15 21 044 6601 000	14.10
15 21 044 6601 333	14.10

List of part numbers

Part number	Page
15 21 046 2601 000	14.10
15 21 046 2601 333	14.10
15 21 046 5601 000	14.10
15 21 046 5601 333	14.10
15 21 046 6601 000	14.10
15 21 046 6601 333	14.10
15 21 048 2601 000	14.10
15 21 048 2601 333	14.10
15 21 048 5601 000	14.10
15 21 048 5601 333	14.10
15 21 048 6601 000	14.10
15 21 048 6601 333	14.10
15 21 050 2601 000	14.10
15 21 050 2601 333	14.10
15 21 050 5601 000	14.10
15 21 050 5601 333	14.10
15 21 050 6601 000	14.10
15 21 050 6601 333	14.10
15 21 052 2601 000	14.10
15 21 052 2601 333	14.10
15 21 052 5601 000	14.10
15 21 052 5601 333	14.10
15 21 052 6601 000	14.10
15 21 052 6601 333	14.10
15 21 054 2601 000	14.10
15 21 054 2601 333	14.10
15 21 054 5601 000	14.10
15 21 054 5601 333	14.10
15 21 054 6601 000	14.10
15 21 054 6601 333	14.10
15 21 056 2601 000	14.10
15 21 056 2601 333	14.10
15 21 056 5601 000	14.10
15 21 056 5601 333	14.10
15 21 056 6601 000	14.10
15 21 056 6601 333	14.10
15 21 058 2601 000	14.10
15 21 058 2601 333	14.10
15 21 058 5601 000	14.10
15 21 058 5601 333	14.10
15 21 058 6601 000	14.10
15 21 058 6601 333	14.10
15 21 060 2601 000	14.10
15 21 060 2601 333	14.10
15 21 060 5601 000	14.10
15 21 060 5601 333	14.10
15 21 060 6601 000	14.10
15 21 060 6601 333	14.10
15 21 062 2601 000	14.10
15 21 062 2601 333	14.10
15 21 062 5601 000	14.10
15 21 062 5601 333	14.10
15 21 062 6601 000	14.10
15 21 062 6601 333	14.10

Part number	Page
15 21 064 2601 000	14.10
15 21 064 2601 333	14.10
15 21 064 5601 000	14.10
15 21 064 5601 333	14.10
15 21 064 6601 000	14.10
15 21 064 6601 333	14.10
15 21 066 2601 000	14.10
15 21 066 2601 333	14.10
15 21 066 5601 000	14.10
15 21 066 5601 333	14.10
15 21 066 6601 000	14.10
15 21 066 6601 333	14.10
15 21 068 2601 000	14.10
15 21 068 2601 333	14.10
15 21 068 5601 000	14.10
15 21 068 5601 333	14.10
15 21 068 6601 000	14.10
15 21 068 6601 333	14.10
15 21 070 2601 000	14.10
15 21 070 2601 333	14.10
15 21 070 5601 000	14.10
15 21 070 5601 333	14.10
15 21 070 6601 000	14.10
15 21 070 6601 333	14.10
15 21 072 2601 000	14.10
15 21 072 2601 333	14.10
15 21 072 5601 000	14.10
15 21 072 5601 333	14.10
15 21 072 6601 000	14.10
15 21 072 6601 333	14.10
15 21 074 2601 000	14.10
15 21 074 2601 333	14.10
15 21 074 5601 000	14.10
15 21 074 5601 333	14.10
15 21 074 6601 000	14.10
15 21 074 6601 333	14.10
15 21 076 2601 000	14.10
15 21 076 2601 333	14.10
15 21 076 5601 000	14.10
15 21 076 5601 333	14.10
15 21 076 6601 000	14.10
15 21 076 6601 333	14.10
15 21 078 2601 000	14.10
15 21 078 2601 333	14.10
15 21 078 5601 000	14.10
15 21 078 5601 333	14.10
15 21 078 6601 000	14.10
15 21 078 6601 333	14.10
15 21 080 2601 000	14.10
15 21 080 2601 333	14.10
15 21 080 5601 000	14.10
15 21 080 5601 333	14.10
15 21 080 6601 000	14.10
15 21 080 6601 333	14.10

Part number	Page
15 21 082 2601 000	14.10
15 21 082 2601 333	14.10
15 21 082 5601 000	14.10
15 21 082 5601 333	14.10
15 21 082 6601 000	14.10
15 21 082 6601 333	14.10
15 21 084 2601 000	14.10
15 21 084 2601 333	14.10
15 21 084 5601 000	14.10
15 21 084 5601 333	14.10
15 21 084 6601 000	14.10
15 21 084 6601 333	14.10
15 21 086 2601 000	14.10
15 21 086 2601 333	14.10
15 21 086 5601 000	14.10
15 21 086 5601 333	14.10
15 21 086 6601 000	14.10
15 21 086 6601 333	14.10
15 21 088 2601 000	14.10
15 21 088 2601 333	14.10
15 21 088 5601 000	14.10
15 21 088 5601 333	14.10
15 21 088 6601 000	14.10
15 21 088 6601 333	14.10
15 21 090 2601 000	14.10
15 21 090 2601 333	14.10
15 21 090 5601 000	14.10
15 21 090 5601 333	14.10
15 21 090 6601 000	14.10
15 21 090 6601 333	14.10
15 21 092 2601 000	14.10
15 21 092 2601 333	14.10
15 21 092 5601 000	14.10
15 21 092 5601 333	14.10
15 21 092 6601 000	14.10
15 21 092 6601 333	14.10
15 21 094 2601 000	14.10
15 21 094 2601 333	14.10
15 21 094 5601 000	14.10
15 21 094 5601 333	14.10
15 21 094 6601 000	14.10
15 21 094 6601 333	14.10
15 21 096 2601 000	14.10
15 21 096 2601 333	14.10
15 21 096 5601 000	14.10
15 21 096 5601 333	14.10
15 21 096 6601 000	14.10
15 21 096 6601 333	14.10
15 21 098 2601 000	14.10
15 21 098 2601 333	14.10
15 21 098 5601 000	14.10
15 21 098 5601 333	14.10
15 21 098 6601 000	14.10
15 21 098 6601 333	14.10

Part number	Page
15 21 100 2601 000	14.10
15 21 100 2601 333	14.10
15 21 100 5601 000	14.10
15 21 100 5601 333	14.10
15 21 100 6601 000	14.10
15 21 100 6601 333	14.10
15 22 006 2601 000	14.10
15 22 006 2601 333	14.10
15 22 006 5601 000	14.10
15 22 006 5601 333	14.10
15 22 006 6601 000	14.10
15 22 006 6601 333	14.10
15 22 008 2601 000	14.10
15 22 008 2601 333	14.10
15 22 008 5601 000	14.10
15 22 008 5601 333	14.10
15 22 008 6601 000	14.10
15 22 008 6601 333	14.10
15 22 010 2601 000	14.10
15 22 010 2601 333	14.10
15 22 010 5601 000	14.10
15 22 010 5601 333	14.10
15 22 010 6601 000	14.10
15 22 010 6601 333	14.10
15 22 012 2601 000	14.10
15 22 012 2601 333	14.10
15 22 012 5601 000	14.10
15 22 012 5601 333	14.10
15 22 012 6601 000	14.10
15 22 012 6601 333	14.10
15 22 014 2601 000	14.10
15 22 014 2601 333	14.10
15 22 014 5601 000	14.10
15 22 014 5601 333	14.10
15 22 014 6601 000	14.10
15 22 014 6601 333	14.10
15 22 016 2601 000	14.10
15 22 016 2601 333	14.10
15 22 016 5601 000	14.10
15 22 016 5601 333	14.10
15 22 016 6601 000	14.10
15 22 016 6601 333	14.10
15 22 018 2601 000	14.10
15 22 018 2601 333	14.10
15 22 018 5601 000	14.10
15 22 018 5601 333	14.10
15 22 018 6601 000	14.10
15 22 018 6601 333	14.10
15 22 020 2601 000	14.10
15 22 020 2601 333	14.10
15 22 020 5601 000	14.10
15 22 020 5601 333	14.10
15 22 020 6601 000	14.10
15 22 020 6601 333	14.10

Part number	Page
15 22 022 2601 000	14.10
15 22 022 2601 333	14.10
15 22 022 5601 000	14.10
15 22 022 5601 333	14.10
15 22 022 6601 000	14.10
15 22 022 6601 333	14.10
15 22 024 2601 000	14.10
15 22 024 2601 333	14.10
15 22 024 5601 000	14.10
15 22 024 5601 333	14.10
15 22 024 6601 000	14.10
15 22 024 6601 333	14.10
15 22 026 2601 000	14.10
15 22 026 2601 333	14.10
15 22 026 5601 000	14.10
15 22 026 5601 333	14.10
15 22 026 6601 000	14.10
15 22 026 6601 333	14.10
15 22 028 2601 000	14.10
15 22 028 2601 333	14.10
15 22 028 5601 000	14.10
15 22 028 5601 333	14.10
15 22 028 6601 000	14.10
15 22 028 6601 333	14.10
15 22 030 2601 000	14.10
15 22 030 2601 333	14.10
15 22 030 5601 000	14.10
15 22 030 5601 333	14.10
15 22 030 6601 000	14.10
15 22 030 6601 333	14.10
15 22 032 2601 000	14.10
15 22 032 2601 333	14.10
15 22 032 5601 000	14.10
15 22 032 5601 333	14.10
15 22 032 6601 000	14.10
15 22 032 6601 333	14.10
15 22 034 2601 000	14.10
15 22 034 2601 333	14.10
15 22 034 5601 000	14.10
15 22 034 5601 333	14.10
15 22 034 6601 000	14.10
15 22 034 6601 333	14.10
15 22 036 2601 000	14.10
15 22 036 2601 333	14.10
15 22 036 5601 000	14.10
15 22 036 5601 333	14.10
15 22 036 6601 000	14.10
15 22 036 6601 333	14.10
15 22 038 2601 000	14.10
15 22 038 2601 333	14.10
15 22 038 5601 000	14.10
15 22 038 5601 333	14.10
15 22 038 6601 000	14.10
15 22 038 6601 333	14.10

List of part numbers

Part number	Page
15 22 040 2601 000	14.10
15 22 040 2601 333	14.10
15 22 040 5601 000	14.10
15 22 040 5601 333	14.10
15 22 040 6601 000	14.10
15 22 040 6601 333	14.10
15 22 042 2601 000	14.10
15 22 042 2601 333	14.10
15 22 042 5601 000	14.10
15 22 042 5601 333	14.10
15 22 042 6601 000	14.10
15 22 042 6601 333	14.10
15 22 044 2601 000	14.10
15 22 044 2601 333	14.10
15 22 044 5601 000	14.10
15 22 044 5601 333	14.10
15 22 044 6601 000	14.10
15 22 044 6601 333	14.10
15 22 046 2601 000	14.10
15 22 046 2601 333	14.10
15 22 046 5601 000	14.10
15 22 046 5601 333	14.10
15 22 046 6601 000	14.10
15 22 046 6601 333	14.10
15 22 048 2601 000	14.10
15 22 048 2601 333	14.10
15 22 048 5601 000	14.10
15 22 048 5601 333	14.10
15 22 048 6601 000	14.10
15 22 048 6601 333	14.10
15 22 050 2601 000	14.10
15 22 050 2601 333	14.10
15 22 050 5601 000	14.10
15 22 050 5601 333	14.10
15 22 050 6601 000	14.10
15 22 050 6601 333	14.10
15 22 052 2601 000	14.10
15 22 052 2601 333	14.10
15 22 052 5601 000	14.10
15 22 052 5601 333	14.10
15 22 052 6601 000	14.10
15 22 052 6601 333	14.10
15 22 054 2601 000	14.10
15 22 054 2601 333	14.10
15 22 054 5601 000	14.10
15 22 054 5601 333	14.10
15 22 054 6601 000	14.10
15 22 054 6601 333	14.10
15 22 056 2601 000	14.10
15 22 056 2601 333	14.10
15 22 056 5601 000	14.10
15 22 056 5601 333	14.10
15 22 056 6601 000	14.10
15 22 056 6601 333	14.10
15 22 058 2601 000	14.10
15 22 058 2601 333	14.10
15 22 058 5601 000	14.10
15 22 058 5601 333	14.10
15 22 058 6601 000	14.10
15 22 058 6601 333	14.10
15 22 060 2601 000	14.10
15 22 060 2601 333	14.10
15 22 060 5601 000	14.10
15 22 060 5601 333	14.10
15 22 060 6601 000	14.10
15 22 060 6601 333	14.10
15 22 062 2601 000	14.10
15 22 062 2601 333	14.10
15 22 062 5601 000	14.10
15 22 062 5601 333	14.10
15 22 062 6601 000	14.10
15 22 062 6601 333	14.10
15 22 064 2601 000	14.10
15 22 064 2601 333	14.10
15 22 064 5601 000	14.10
15 22 064 5601 333	14.10
15 22 064 6601 000	14.10
15 22 064 6601 333	14.10
15 22 066 2601 000	14.10
15 22 066 2601 333	14.10
15 22 066 5601 000	14.10
15 22 066 5601 333	14.10
15 22 066 6601 000	14.10
15 22 066 6601 333	14.10
15 22 068 2601 000	14.10
15 22 068 2601 333	14.10
15 22 068 5601 000	14.10
15 22 068 5601 333	14.10
15 22 068 6601 000	14.10
15 22 068 6601 333	14.10
15 22 070 2601 000	14.10
15 22 070 2601 333	14.10
15 22 070 5601 000	14.10
15 22 070 5601 333	14.10
15 22 070 6601 000	14.10
15 22 070 6601 333	14.10
15 22 072 2601 000	14.10
15 22 072 2601 333	14.10
15 22 072 5601 000	14.10
15 22 072 5601 333	14.10
15 22 072 6601 000	14.10
15 22 072 6601 333	14.10
15 22 074 2601 000	14.10
15 22 074 2601 333	14.10
15 22 074 5601 000	14.10
15 22 074 5601 333	14.10
15 22 074 6601 000	14.10
15 22 074 6601 333	14.10
15 22 076 2601 000	14.10
15 22 076 2601 333	14.10
15 22 076 5601 000	14.10
15 22 076 5601 333	14.10
15 22 076 6601 000	14.10
15 22 076 6601 333	14.10
15 22 078 2601 000	14.10
15 22 078 2601 333	14.10
15 22 078 5601 000	14.10
15 22 078 5601 333	14.10
15 22 078 6601 000	14.10
15 22 078 6601 333	14.10
15 22 080 2601 000	14.10
15 22 080 2601 333	14.10
15 22 080 5601 000	14.10
15 22 080 5601 333	14.10
15 22 080 6601 000	14.10
15 22 080 6601 333	14.10
15 22 082 2601 000	14.10
15 22 082 2601 333	14.10
15 22 082 5601 000	14.10
15 22 082 5601 333	14.10
15 22 082 6601 000	14.10
15 22 082 6601 333	14.10
15 22 084 2601 000	14.10
15 22 084 2601 333	14.10
15 22 084 5601 000	14.10
15 22 084 5601 333	14.10
15 22 084 6601 000	14.10
15 22 084 6601 333	14.10
15 22 086 2601 000	14.10
15 22 086 2601 333	14.10
15 22 086 5601 000	14.10
15 22 086 5601 333	14.10
15 22 086 6601 000	14.10
15 22 086 6601 333	14.10
15 22 088 2601 000	14.10
15 22 088 2601 333	14.10
15 22 088 5601 000	14.10
15 22 088 5601 333	14.10
15 22 088 6601 000	14.10
15 22 088 6601 333	14.10
15 22 090 2601 000	14.10
15 22 090 2601 333	14.10
15 22 090 5601 000	14.10
15 22 090 5601 333	14.10
15 22 090 6601 000	14.10
15 22 090 6601 333	14.10
15 22 092 2601 000	14.10
15 22 092 2601 333	14.10
15 22 092 5601 000	14.10
15 22 092 5601 333	14.10
15 22 092 6601 000	14.10
15 22 092 6601 333	14.10
15 22 094 2601 000	14.10
15 22 094 2601 333	14.10
15 22 094 5601 000	14.10
15 22 094 5601 333	14.10
15 22 094 6601 000	14.10
15 22 094 6601 333	14.10
15 22 096 2601 000	14.10
15 22 096 2601 333	14.10
15 22 096 5601 000	14.10
15 22 096 5601 333	14.10
15 22 096 6601 000	14.10
15 22 096 6601 333	14.10
15 22 098 2601 000	14.10
15 22 098 2601 333	14.10
15 22 098 5601 000	14.10
15 22 098 5601 333	14.10
15 22 098 6601 000	14.10
15 22 098 6601 333	14.10
15 22 100 2601 000	14.10
15 22 100 2601 333	14.10
15 22 100 5601 000	14.10
15 22 100 5601 333	14.10
15 22 100 6601 000	14.10
15 22 100 6601 333	14.10
15 25 006 2601 000	14.14
15 25 006 2601 333	14.14
15 25 006 5601 000	14.14
15 25 006 5601 333	14.14
15 25 006 6601 000	14.14
15 25 006 6601 333	14.14
15 25 008 2601 000	14.14
15 25 008 2601 333	14.14
15 25 008 5601 000	14.14
15 25 008 5601 333	14.14
15 25 008 6601 000	14.14
15 25 008 6601 333	14.14
15 25 010 2601 000	14.14
15 25 010 2601 333	14.14
15 25 010 5601 000	14.14
15 25 010 5601 333	14.14
15 25 010 6601 000	14.14
15 25 010 6601 333	14.14
15 25 012 2601 000	14.14
15 25 012 2601 333	14.14
15 25 012 5601 000	14.14
15 25 012 5601 333	14.14
15 25 012 6601 000	14.14
15 25 012 6601 333	14.14
15 25 014 2601 000	14.14
15 25 014 2601 333	14.14
15 25 014 5601 000	14.14
15 25 014 5601 333	14.14
15 25 014 6601 000	14.14
15 25 014 6601 333	14.14
15 25 016 2601 000	14.14
15 25 016 2601 333	14.14
15 25 016 5601 000	14.14
15 25 016 5601 333	14.14
15 25 016 6601 000	14.14
15 25 016 6601 333	14.14
15 25 018 2601 000	14.14
15 25 018 2601 333	14.14
15 25 018 5601 000	14.14
15 25 018 5601 333	14.14
15 25 018 6601 000	14.14
15 25 018 6601 333	14.14
15 25 020 2601 000	14.14
15 25 020 2601 333	14.14
15 25 020 5601 000	14.14
15 25 020 5601 333	14.14
15 25 020 6601 000	14.14
15 25 020 6601 333	14.14
15 25 022 2601 000	14.14
15 25 022 2601 333	14.14
15 25 022 5601 000	14.14
15 25 022 5601 333	14.14
15 25 022 6601 000	14.14
15 25 022 6601 333	14.14
15 25 024 2601 000	14.14
15 25 024 2601 333	14.14
15 25 024 5601 000	14.14
15 25 024 5601 333	14.14
15 25 024 6601 000	14.14
15 25 024 6601 333	14.14
15 25 026 2601 000	14.14
15 25 026 2601 333	14.14
15 25 026 5601 000	14.14
15 25 026 5601 333	14.14
15 25 026 6601 000	14.14
15 25 026 6601 333	14.14
15 25 028 2601 000	14.14
15 25 028 2601 333	14.14
15 25 028 5601 000	14.14
15 25 028 5601 333	14.14
15 25 028 6601 000	14.14
15 25 028 6601 333	14.14
15 25 030 2601 000	14.14
15 25 030 2601 333	14.14
15 25 030 5601 000	14.14
15 25 030 5601 333	14.14
15 25 030 6601 000	14.14
15 25 030 6601 333	14.14
15 25 032 2601 000	14.14
15 25 032 2601 333	14.14
15 25 032 5601 000	14.14
15 25 032 5601 333	14.14
15 25 032 6601 000	14.14
15 25 032 6601 333	14.14

List of part numbers

Part number	Page
15 25 034 2601 000	14.14
15 25 034 2601 333	14.14
15 25 034 5601 000	14.14
15 25 034 5601 333	14.14
15 25 034 6601 000	14.14
15 25 034 6601 333	14.14
15 25 036 2601 000	14.14
15 25 036 2601 333	14.14
15 25 036 5601 000	14.14
15 25 036 5601 333	14.14
15 25 036 6601 000	14.14
15 25 036 6601 333	14.14
15 25 038 2601 000	14.14
15 25 038 2601 333	14.14
15 25 038 5601 000	14.14
15 25 038 5601 333	14.14
15 25 038 6601 000	14.14
15 25 038 6601 333	14.14
15 25 040 2601 000	14.14
15 25 040 2601 333	14.14
15 25 040 5601 000	14.14
15 25 040 5601 333	14.14
15 25 040 6601 000	14.14
15 25 040 6601 333	14.14
15 25 042 2601 000	14.14
15 25 042 2601 333	14.14
15 25 042 5601 000	14.14
15 25 042 5601 333	14.14
15 25 042 6601 000	14.14
15 25 042 6601 333	14.14
15 25 044 2601 000	14.14
15 25 044 2601 333	14.14
15 25 044 5601 000	14.14
15 25 044 5601 333	14.14
15 25 044 6601 000	14.14
15 25 044 6601 333	14.14
15 25 046 2601 000	14.14
15 25 046 2601 333	14.14
15 25 046 5601 000	14.14
15 25 046 5601 333	14.14
15 25 046 6601 000	14.14
15 25 046 6601 333	14.14
15 25 048 2601 000	14.14
15 25 048 2601 333	14.14
15 25 048 5601 000	14.14
15 25 048 5601 333	14.14
15 25 048 6601 000	14.14
15 25 048 6601 333	14.14
15 25 050 2601 000	14.14
15 25 050 2601 333	14.14
15 25 050 5601 000	14.14
15 25 050 5601 333	14.14
15 25 050 6601 000	14.14
15 25 050 6601 333	14.14
15 25 052 2601 000	14.14
15 25 052 2601 333	14.14
15 25 052 5601 000	14.14
15 25 052 5601 333	14.14
15 25 052 6601 000	14.14
15 25 052 6601 333	14.14
15 25 054 2601 000	14.14
15 25 054 2601 333	14.14
15 25 054 5601 000	14.14
15 25 054 5601 333	14.14
15 25 054 6601 000	14.14
15 25 054 6601 333	14.14
15 25 056 2601 000	14.14
15 25 056 2601 333	14.14
15 25 056 5601 000	14.14
15 25 056 5601 333	14.14
15 25 056 6601 000	14.14
15 25 056 6601 333	14.14
15 25 058 2601 000	14.14
15 25 058 2601 333	14.14
15 25 058 5601 000	14.14
15 25 058 5601 333	14.14
15 25 058 6601 000	14.14
15 25 058 6601 333	14.14
15 25 060 2601 000	14.14
15 25 060 2601 333	14.14
15 25 060 5601 000	14.14
15 25 060 5601 333	14.14
15 25 060 6601 000	14.14
15 25 060 6601 333	14.14
15 25 062 2601 000	14.14
15 25 062 2601 333	14.14
15 25 062 5601 000	14.14
15 25 062 5601 333	14.14
15 25 062 6601 000	14.14
15 25 062 6601 333	14.14
15 25 064 2601 000	14.14
15 25 064 2601 333	14.14
15 25 064 5601 000	14.14
15 25 064 5601 333	14.14
15 25 064 6601 000	14.14
15 25 064 6601 333	14.14
15 25 066 2601 000	14.14
15 25 066 2601 333	14.14
15 25 066 5601 000	14.14
15 25 066 5601 333	14.14
15 25 066 6601 000	14.14
15 25 066 6601 333	14.14
15 25 068 2601 000	14.14
15 25 068 2601 333	14.14
15 25 068 5601 000	14.14
15 25 068 5601 333	14.14
15 25 068 6601 000	14.14
15 25 068 6601 333	14.14
15 25 070 2601 000	14.14
15 25 070 2601 333	14.14
15 25 070 5601 000	14.14
15 25 070 5601 333	14.14
15 25 070 6601 000	14.14
15 25 070 6601 333	14.14
15 25 072 2601 000	14.14
15 25 072 2601 333	14.14
15 25 072 5601 000	14.14
15 25 072 5601 333	14.14
15 25 072 6601 000	14.14
15 25 072 6601 333	14.14
15 25 074 2601 000	14.14
15 25 074 2601 333	14.14
15 25 074 5601 000	14.14
15 25 074 5601 333	14.14
15 25 074 6601 000	14.14
15 25 074 6601 333	14.14
15 25 076 2601 000	14.14
15 25 076 2601 333	14.14
15 25 076 5601 000	14.14
15 25 076 5601 333	14.14
15 25 076 6601 000	14.14
15 25 076 6601 333	14.14
15 25 078 2601 000	14.14
15 25 078 2601 333	14.14
15 25 078 5601 000	14.14
15 25 078 5601 333	14.14
15 25 078 6601 000	14.14
15 25 078 6601 333	14.14
15 25 080 2601 000	14.14
15 25 080 2601 333	14.14
15 25 080 5601 000	14.14
15 25 080 5601 333	14.14
15 25 080 6601 000	14.14
15 25 080 6601 333	14.14
15 25 082 2601 000	14.14
15 25 082 2601 333	14.14
15 25 082 5601 000	14.14
15 25 082 5601 333	14.14
15 25 082 6601 000	14.14
15 25 082 6601 333	14.14
15 25 084 2601 000	14.14
15 25 084 2601 333	14.14
15 25 084 5601 000	14.14
15 25 084 5601 333	14.14
15 25 084 6601 000	14.14
15 25 084 6601 333	14.14
15 25 086 2601 000	14.14
15 25 086 2601 333	14.14
15 25 086 5601 000	14.14
15 25 086 5601 333	14.14
15 25 086 6601 000	14.14
15 25 086 6601 333	14.14
15 25 088 2601 000	14.14
15 25 088 2601 333	14.14
15 25 088 5601 000	14.14
15 25 088 5601 333	14.14
15 25 088 6601 000	14.14
15 25 088 6601 333	14.14
15 25 090 2601 000	14.14
15 25 090 2601 333	14.14
15 25 090 5601 000	14.14
15 25 090 5601 333	14.14
15 25 090 6601 000	14.14
15 25 090 6601 333	14.14
15 25 092 2601 000	14.14
15 25 092 2601 333	14.14
15 25 092 5601 000	14.14
15 25 092 5601 333	14.14
15 25 092 6601 000	14.14
15 25 092 6601 333	14.14
15 25 094 2601 000	14.14
15 25 094 2601 333	14.14
15 25 094 5601 000	14.14
15 25 094 5601 333	14.14
15 25 094 6601 000	14.14
15 25 094 6601 333	14.14
15 25 096 2601 000	14.14
15 25 096 2601 333	14.14
15 25 096 5601 000	14.14
15 25 096 5601 333	14.14
15 25 096 6601 000	14.14
15 25 096 6601 333	14.14
15 25 098 2601 000	14.14
15 25 098 2601 333	14.14
15 25 098 5601 000	14.14
15 25 098 5601 333	14.14
15 25 098 6601 000	14.14
15 25 098 6601 333	14.14
15 25 100 2601 000	14.14
15 25 100 2601 333	14.14
15 25 100 5601 000	14.14
15 25 100 5601 333	14.14
15 25 100 6601 000	14.14
15 25 100 6601 333	14.14
16 04 170 5104 000	12.09
16 04 170 5106 000	12.09
16 11 170 5202 000	12.13
16 11 170 5205 000	12.13
16 11 170 5206 000	12.13
16 11 170 5207 000	12.13
16 31 030 1201 000	12.11
16 31 034 1201 000	12.11
16 32 030 1101 000	12.11
16 32 034 1101 000	12.11
16 33 096 1201 000	12.15
16 34 096 1101 000	12.15
16 79 000 0010 000	12.16
16 99 000 0001 000	20.29
16 99 000 0002 000	20.29
16 99 000 0003 000	20.29
16 99 000 0004 000	20.29
16 99 000 0005 000	20.29
16 99 000 0006 000	20.29
16 99 000 0007 000	20.29
16 99 000 0008 000	20.29
16 99 000 0009 000	20.29
16 99 000 0010 000	20.29
16 99 000 0011 000	20.29
17 01 100 1001	11.14
17 01 100 1201	11.14
17 01 100 2001	11.14
17 01 100 2201	11.14
17 01 110 1201	11.12
17 01 110 1204	11.12
17 01 110 1402	11.13
17 01 110 2201	11.12
17 01 110 2204	11.12
17 01 110 2402	11.13
17 01 132 1007	11.12
17 01 132 1203	11.12
17 01 132 2203	11.12
17 01 132 2007	11.12
17 01 154 1001	11.13
17 01 154 1201	11.12
17 01 154 1203	11.13
17 01 154 1204	11.13
17 01 154 1205	11.12
17 01 154 1603	11.13
17 01 154 1604	11.13
17 01 154 2001	11.13
17 01 154 2201	11.12
17 01 154 2203	11.13
17 01 154 2204	11.13
17 01 154 2205	11.12

List of part numbers

Part number	Page
17 01 154 2603	11.13
17 01 154 2604	11.13
17 02 125 1201	11.15
17 02 125 1205	11.15
17 02 125 2201	11.15
17 02 125 2205	11.15
17 02 150 1201	11.15
17 02 150 2201	11.15
17 02 175 1006	11.15
17 02 175 1201	11.15
17 02 175 1202	11.15
17 02 175 2006	11.15
17 02 175 2201	11.15
17 02 175 2202	11.15
17 03 055 1201	11.22
17 03 055 1202	11.22
17 03 055 1401	11.22
17 03 055 2201	11.22
17 03 055 2202	11.22
17 03 055 2401	11.22
17 03 066 1001	11.22
17 03 066 2001	11.22
17 03 077 1001	11.23
17 03 077 1201	11.22
17 03 077 1202	11.22
17 03 077 1601	11.23
17 03 077 2001	11.23
17 03 077 2201	11.22
17 03 077 2202	11.22
17 03 077 2601	11.23
17 04 110 1201	11.16
17 04 110 2201	11.16
17 04 132 1001	11.16
17 04 132 2001	11.16
17 04 154 1002	11.16
17 04 154 1010	11.16
17 04 154 1201	11.16
17 04 154 1203	11.16
17 04 154 2002	11.16
17 04 154 2010	11.16
17 04 154 2201	11.16
17 04 154 2203	11.16
17 05 095 1201	11.17
17 05 095 1401	11.17
17 05 095 2201	11.17
17 05 095 2401	11.17
17 05 133 1005	11.17
17 05 133 1201	11.17
17 05 133 1203	11.17
17 05 133 1602	11.17
17 05 133 2005	11.17
17 05 133 2201	11.17
17 05 133 2203	11.17
17 05 133 2602	11.17
17 06 220 1201	11.28
17 06 220 1202	11.28
17 06 220 2201	11.28
17 06 220 2202	11.28
17 06 232 1201	11.28
17 06 232 2201	11.28
17 06 308 1001	11.29
17 06 308 1005	11.29
17 06 308 1201	11.28
17 06 308 1202	11.28
17 06 308 1203	11.28
17 06 308 2001	11.29
17 06 308 2005	11.29
17 06 308 2201	11.28
17 06 308 2202	11.28
17 06 308 2203	11.28
17 10 200 1201	11.34
17 10 200 2201	11.34
17 10 244 1001	11.34
17 10 244 1201	11.34
17 10 244 2001	11.34
17 10 244 2201	11.34
17 11 176 1201	11.32
17 11 176 2201	11.32
17 11 220 1001	11.32
17 11 220 1201	11.32
17 11 220 2001	11.32
17 11 220 2201	11.32
17 12 200 1201	11.33
17 12 200 2201	11.33
17 12 250 1001	11.33
17 12 250 1201	11.33
17 12 250 2001	11.33
17 12 250 2201	11.33
17 13 095 1201	11.21
17 13 095 2201	11.21
17 13 127 1201	11.21
17 13 127 1601	11.21
17 13 127 2201	11.21
17 13 127 2601	11.21
17 14 110 1201	11.20
17 14 110 2201	11.20
17 14 146 1201	11.20
17 14 146 1601	11.20
17 14 146 2201	11.20
17 14 146 2601	11.20
17 15 125 1201	11.19
17 15 125 2201	11.19
17 15 169 1003	11.19
17 15 169 1201	11.19
17 15 169 2003	11.19
17 15 169 2201	11.19
17 21 000 4102	11.24
17 21 000 4102	11.26
17 21 090 1103	11.24
17 21 090 2103	11.24
17 21 110 1101	11.24
17 21 110 1102	11.24
17 21 110 2101	11.24
17 21 110 2102	11.24
17 22 000 4102	11.25
17 22 125 1101	11.25
17 22 125 1102	11.25
17 22 125 2101	11.25
17 22 125 2102	11.25
17 23 000 4102	11.24
17 23 000 4102	11.27
17 23 000 4102	11.30
17 23 055 1101	11.27
17 23 055 1102	11.27
17 23 055 2101	11.27
17 23 055 2102	11.27
17 24 000 4102	11.25
17 24 000 4102	11.30
17 24 110 1101	11.25
17 24 110 1102	11.25
17 24 110 2101	11.25
17 24 110 2102	11.25
17 25 000 4102	11.25
17 25 095 1101	11.25
17 25 095 1102	11.25
17 25 095 2101	11.25
17 25 095 2102	11.25
17 26 000 4102	11.30
17 26 200 1103	11.30
17 26 200 2103	11.30
17 26 220 1101	11.30
17 26 220 1102	11.30
17 26 220 2101	11.30
17 26 220 2102	11.30
17 29 000 4102	11.24
17 29 000 4102	11.30
17 33 000 4102	11.26
17 33 095 1101	11.26
17 33 095 1102	11.26
17 33 095 2101	11.26
17 33 095 2102	11.26
17 34 000 4102	11.26
17 34 110 1101	11.26
17 34 110 1102	11.26
17 34 110 2101	11.26
17 34 110 2102	11.26
17 35 125 1101	11.26
17 35 125 1102	11.26
17 35 125 2101	11.26
17 35 125 2102	11.26
17 61 004 2101	11.38
17 61 004 2102	11.38
17 61 004 2103	11.38
17 61 004 2104	11.38
17 61 004 2801	11.39
17 61 004 2802	11.39
17 66 004 2201	11.40
17 70 000 1001	11.43
17 70 000 1002	11.43
17 70 000 1003	11.43
17 70 000 1004	11.43
17 70 000 2001	11.44
17 70 000 2002	11.44
17 70 000 2003	11.44
17 70 000 2004	11.44
17 70 000 3001	11.46
17 70 000 3002	11.46
17 70 000 3003	11.46
17 70 000 3004	11.46
17 70 000 4001	11.44
17 70 000 4002	11.44
17 70 000 4003	11.44
17 70 000 4004	11.44
17 70 000 5001	11.44
17 70 000 5002	11.44
17 70 000 5003	11.44
17 70 000 5004	11.44
17 70 000 6001	11.45
17 70 000 6002	11.45
17 70 000 6003	11.45
17 70 000 6004	11.45
17 70 000 7001	11.45
17 70 000 7002	11.45
17 70 000 7003	11.45
17 70 000 7004	11.45
17 70 000 8001	11.45
17 70 000 8002	11.45
17 70 000 8003	11.45
17 70 000 8004	11.45
17 79 000 0010	11.41
17 79 000 0011	11.41
17 79 000 0012	11.41
17 79 000 0013	11.41
17 79 000 0014	11.41
17 79 000 0015	11.41
17 79 000 0016	11.41
17 79 000 0018	11.41
17 79 000 0019	11.41
17 79 000 0020	11.41
17 79 000 0021	11.41
17 79 000 0022	11.41
17 79 000 0023	11.41
17 79 000 0024	11.41
17 79 000 0025	11.41
17 79 000 0026	11.41
17 79 000 0028	11.41
17 79 000 0029	11.41
17 79 000 0080	11.47
17 99 000 0001	20.34
17 99 000 0002	20.34
17 99 000 0003	20.34
17 99 000 0004	20.34
17 99 000 0005	20.34
17 99 000 0006	20.34
17 99 000 0007	20.34
17 99 000 0008	20.34
17 99 000 0009	20.34
17 99 000 0012	20.30
17 99 000 0013	20.30

List of part numbers

Part number	Page
17 99 000 0014	20.31
17 99 000 0015	20.31
17 99 000 0016	20.31
17 99 000 0017	20.31
17 99 000 0018	20.31
17 99 000 0019	20.31
17 99 000 0020	20.31
17 99 000 0021	20.31
17 99 000 0022	20.31
17 99 000 0023	20.31
17 99 000 0024	20.31
17 99 000 0025	20.31
17 99 000 0026	20.31
17 99 000 0027	20.31
17 99 000 0028	20.31
17 99 000 0029	20.32
17 99 000 0030	20.32
17 99 000 0031	20.32
17 99 000 0032	20.32
17 99 000 0033	20.32
17 99 000 0034	20.32
17 99 000 0035	20.32
17 99 000 0036	20.32
17 99 000 0037	20.32
17 99 000 0038	20.32
17 99 000 0039	20.32
17 99 000 0040	20.32
17 99 000 0041	20.32
17 99 000 0042	20.32
17 99 000 0043	20.32
17 99 000 0044	20.32
17 99 000 0045	20.32
17 99 000 0046	20.32
17 99 000 0047	20.32
17 99 000 0048	20.32
17 99 000 0049	20.32
17 99 000 0050	20.32
17 99 000 0051	20.32
17 99 000 0052	20.30
17 99 000 0053	20.30
17 99 000 0054	20.30
17 99 000 0055	20.30
17 99 000 0056	20.30
17 99 000 0057	20.30
17 99 000 0058	20.32
17 99 000 0059	20.32
17 99 000 0060	20.30
17 99 000 0061	20.30
17 99 000 0063	20.33
17 99 000 0065	20.33
17 99 000 0066	20.33
17 99 000 0068	20.33
17 99 000 0069	20.34
17 99 000 0070	20.34
17 99 000 0071	20.34
17 99 000 0072	20.34
17 99 000 0073	20.30
17 99 000 0074	20.30
17 99 000 0093	20.35
17 99 000 0094	20.35
17 99 000 0095	20.35
17 99 000 0102	20.35
17 99 000 0103	20.35

Part number	Page
19 00 000 5020	01.35
19 00 000 5079	01.35
19 12 000 5057	04.41
19 12 000 5058	04.41
19 12 000 5157	04.40
19 12 000 5158	04.40
19 12 008 0426	04.41
19 12 008 0429	04.40
19 12 008 0501	04.41
19 12 008 0502	04.41
19 12 008 0526	04.41
19 12 008 0729	04.42
19 12 708 0501	04.41
19 20 003 0220	04.22
19 20 003 0220	04.35
19 20 003 0227	04.22
19 20 003 0227	04.35
19 20 003 0420	04.35
19 20 003 0423	04.22
19 20 003 0427	04.22
19 20 003 0427	04.35
19 20 003 0620	04.35
19 20 003 0623	04.22
19 20 003 0627	04.22
19 20 003 0627	04.35
19 20 003 0720	04.22
19 20 003 0720	04.35
19 20 003 0727	04.22
19 20 003 0727	04.35
19 20 003 1150	04.34
19 20 003 1250	04.22
19 20 003 1250	04.34
19 20 003 1252	04.34
19 20 003 1440	04.34
19 20 003 1443	04.22
19 20 003 1640	04.34
19 20 003 1643	04.22
19 20 003 1750	04.22
19 20 003 1750	04.34
20 10 001 5211	02.54
20 10 001 5217	02.49
20 10 001 5217	02.50
20 10 001 5217	02.52
20 10 001 5217	02.53
20 10 125 5211	02.49
20 10 125 5211	02.50
20 10 125 5211	02.52
20 10 125 5211	02.53
20 10 230 5211	02.49
20 10 230 5211	02.50
20 10 230 5211	02.52
20 10 230 5211	02.53

Part number	Page
20 80 000 0003	01.26
20 80 001 9902	20.45
20 80 001 9911	02.57
20 80 001 9911	20.45
20 80 001 9912	20.45
20 80 001 9913	20.45
20 82 000 0001	01.23
20 82 000 0001	01.24
20 82 000 0001	01.28
20 82 000 0001	01.30
20 82 000 0001	01.32
20 82 000 0001	01.33
20 82 000 0001	01.34
20 82 000 0001	02.45
20 82 000 0001	03.87
20 82 000 0001	03.108
20 82 000 0002	01.24
20 82 000 0003	01.23
20 82 000 0003	01.24
20 82 000 0003	01.28
20 82 000 0003	01.32
20 82 000 0003	01.33
20 82 000 0003	01.34
20 82 000 0003	02.45
20 82 000 0003	03.87
20 82 000 0003	03.108
20 82 000 1210	01.33
20 82 000 1210	01.34
20 82 000 1210	03.87
20 82 000 1210	03.108
20 82 000 9901	01.23
20 82 000 9901	01.23
20 82 000 9901	01.28
20 82 000 9901	01.32
20 82 000 9901	01.33
20 82 000 9901	01.34
20 82 000 9901	01.35
20 82 000 9901	02.45
20 82 000 9901	03.87
20 82 000 9901	03.108
20 82 000 9915	01.24
20 82 000 9915	01.28
20 82 000 9915	01.35
20 82 000 9916	01.11
20 82 000 9916	01.12
20 82 000 9916	01.24
20 82 000 9916	01.28
20 82 000 9916	01.35
20 82 001 0001	01.24
20 82 001 0001	02.32
20 82 001 0001	02.34
20 82 001 0001	02.39
20 82 001 0001	02.46
20 82 001 0002	01.24
20 82 005 0001	01.33
20 82 005 0002	01.34
20 82 005 0002	03.108
20 82 005 1214	01.33
20 82 005 1214	03.87

Part number	Page
20 82 006 1218	01.34
20 82 006 1218	03.108
20 82 101 0001	01.32
20 82 101 0010	01.23
20 82 101 0220	01.26
20 82 102 0101	01.27
20 82 104 0001	02.45
20 82 104 0045	02.45
20 82 104 0101	01.27
20 82 400 0001	01.25
20 82 400 0002	01.29
20 82 405 0001	01.29
20 82 500 0001	01.28
20 82 500 0001	01.30
20 82 500 0002	01.28
20 82 500 0003	01.30
20 82 501 0001	01.28
20 82 501 0001	01.30
20 82 600 1002	01.31
20 82 600 1004	01.31
20 82 600 1006	01.31
20 82 600 1008	01.31
20 82 600 1010	01.31
20 82 600 1020	01.31
20 82 600 1030	01.31
20 82 600 1040	01.31
20 82 600 1050	01.31
20 82 600 1100	01.31
20 82 600 2002	01.31
20 82 600 2004	01.31
20 82 600 2006	01.31
20 82 600 2008	01.31
20 82 600 2010	01.31
20 82 600 2020	01.31
20 82 600 2030	01.31
20 82 600 2040	01.31
20 82 600 2050	01.31
20 82 600 2100	01.31
20 82 601 1002	01.31
20 82 601 1004	01.31
20 82 601 1006	01.31
20 82 601 1008	01.31
20 82 601 1010	01.31
20 82 601 1020	01.31
20 82 601 1030	01.31
20 82 601 1040	01.31
20 82 601 1050	01.31
20 82 601 1100	01.31
20 99 000 1031	20.45
20 99 000 1033	20.45
20 99 000 1035	20.45

Part number	Page
20 99 000 1041	20.45
20 99 000 1045	20.45
20 99 000 1046	20.45
20 99 000 1092	20.45
20 99 000 1093	20.45
20 99 000 1099	02.57
20 99 000 3013	02.57
20 99 000 3016	02.57
21 01 000 0003	03.55
21 01 000 0003	03.76
21 01 000 0003	03.104
21 01 000 0003	03.115
21 01 000 0003	03.124
21 01 000 0007	03.145
21 01 000 0008	03.145
21 01 000 0018	03.55
21 01 000 0018	03.78
21 01 000 0018	03.103
21 01 000 0018	03.114
21 01 000 0020	03.140
21 01 000 0030	03.56
21 01 000 0030	03.77
21 01 000 0030	03.104
21 01 000 0030	03.115
21 01 000 0030	03.124
21 01 000 0031	03.56
21 01 000 0031	03.77
21 01 000 0031	03.104
21 01 000 0031	03.115
21 01 000 0031	03.124
21 01 000 0033	03.56
21 01 000 0033	03.77
21 01 000 0033	03.104
21 01 000 0033	03.115
21 01 000 0036	03.97
21 01 000 0036	03.110
21 01 000 0038	03.56
21 01 000 0038	03.77
21 01 000 0038	03.104
21 01 000 0038	03.115
21 01 000 0039	03.145
21 01 010 0001	03.145
21 01 010 0006	03.145
21 01 010 2001	03.55
21 01 010 2005	03.19
21 01 010 2007	03.55
21 01 010 2007	03.78
21 01 010 2008	03.19
21 01 010 2011	03.55
21 01 010 2013	03.19
21 01 010 2015	03.55
21 01 010 2015	03.78
21 01 010 2016	03.19
21 01 010 2017	03.55
21 01 010 2017	03.78
21 01 010 2017	03.103
21 01 100 9014	03.114
21 01 100 9014	03.122
21 01 100 9019	03.114
21 01 100 9019	03.122

List of part numbers

Part number	Page
21 01 100 9020	03.54
21 01 100 9020	03.122
21 01 130 1013	03.144
21 01 130 1023	03.144
21 01 130 1223	03.144
21 01 130 3013	03.144
21 01 130 3023	03.144
21 01 130 3233	03.144
21 01 140 1023	03.144
21 01 140 1323	03.144
21 01 140 3023	03.144
21 01 140 3333	03.144
21 01 140 5081	03.26
21 01 140 5091	03.27
21 01 141 1023	03.144
21 01 141 1323	03.144
21 01 141 3023	03.144
21 01 141 3333	03.144
21 02 151 1305	03.12
21 02 151 1405	03.12
21 02 151 2305	03.13
21 02 151 2405	03.13
21 02 159 1305	03.11
21 02 357 6305	03.18
21 02 357 6405	03.18
21 02 454 7301	03.16
21 02 454 7302	03.16
21 02 454 7303	03.16
21 02 454 7304	03.16
21 02 454 7305	03.16
21 02 554 7301	03.17
21 02 554 7302	03.17
21 02 554 7303	03.17
21 02 554 7304	03.17
21 02 554 7305	03.17
21 03 030 1300	03.78
21 03 030 1400	03.54
21 03 111 1405	03.24
21 03 111 2405	03.25
21 03 112 1405	03.24
21 03 112 2405	03.25
21 03 121 1801	03.30
21 03 121 2801	03.31
21 03 212 1305	03.28
21 03 212 1306	03.28
21 03 212 1400	03.28
21 03 212 1407	03.28
21 03 212 2305	03.29
21 03 212 2306	03.29
21 03 212 2400	03.29
21 03 212 2407	03.29
21 03 221 1405	03.30
21 03 221 2405	03.31
21 03 222 2435	03.128
21 03 241 1301	03.60
21 03 241 2301	03.61
21 03 272 1505	03.28
21 03 272 2505	03.29
21 03 281 1405	03.82
21 03 281 2405	03.83
21 03 282 1405	03.82
21 03 282 2405	03.83
21 03 301 1000	03.52
21 03 301 1000	03.74
21 03 301 1000	03.101
21 03 301 1001	03.52
21 03 301 1001	03.74
21 03 301 1001	03.101
21 03 301 2000	03.53
21 03 301 2000	03.75
21 03 301 2000	03.102
21 03 301 2000	03.113
21 03 301 2003	03.53
21 03 301 2003	03.75
21 03 301 2003	03.102
21 03 301 2003	03.113
21 03 301 2003	03.118
21 03 301 2003	03.119
21 03 301 2003	03.120
21 03 301 2003	03.121
21 03 311 1402	03.48
21 03 311 1501	03.48
21 03 311 2400	03.49
21 03 311 2501	03.49
21 03 319 9501	03.54
21 03 321 1410	03.50
21 03 321 1418	03.52
21 03 321 1420	03.50
21 03 321 1425	03.44
21 03 321 1510	03.50
21 03 321 1518	03.52
21 03 321 1520	03.50
21 03 321 1530	03.52
21 03 321 1531	03.52
21 03 321 1818	03.52
21 03 321 1830	03.52
21 03 321 1831	03.52
21 03 321 2418	03.53
21 03 321 2425	03.45
21 03 321 2518	03.53
21 03 321 2518	03.118
21 03 321 2530	03.53
21 03 321 2531	03.53
21 03 321 2818	03.53
21 03 321 2818	03.118
21 03 321 2830	03.53
21 03 321 2831	03.53
21 03 321 6410	03.51
21 03 321 6420	03.51
21 03 321 6510	03.51
21 03 321 6520	03.51
21 03 321 9400	03.54
21 03 330 1300	03.70
21 03 339 1301	03.70
21 03 339 2301	03.71
21 03 341 1425	03.66
21 03 341 1505	03.72
21 03 341 1518	03.74
21 03 341 1530	03.74
21 03 341 1531	03.74
21 03 341 2425	03.67
21 03 341 2505	03.73
21 03 341 2518	03.75
21 03 341 2518	03.119
21 03 341 2530	03.75
21 03 341 2531	03.75
21 03 341 6401	03.78
21 03 371 1400	03.98
21 03 371 1403	03.94
21 03 371 1405	03.48
21 03 371 2403	03.95
21 03 371 2415	03.99
21 03 381 1418	03.101
21 03 381 1425	03.90
21 03 381 1430	03.101
21 03 381 1431	03.101
21 03 381 2401	03.96
21 03 381 2403	03.117
21 03 381 2418	03.102
21 03 381 2418	03.120
21 03 381 2425	03.91
21 03 381 2430	03.102
21 03 381 2431	03.102
21 03 381 2800	03.109
21 03 381 2802	03.111
21 03 381 2803	03.111
21 03 381 2804	03.112
21 03 381 2805	03.112
21 03 381 2806	03.113
21 03 381 2806	03.121
21 03 381 2807	03.113
21 03 381 2807	03.121
21 03 381 2809	03.112
21 03 381 2811	03.112
21 03 381 2812	03.112
21 03 381 2813	03.111
21 03 381 2814	03.111
21 03 381 4401	03.96
21 03 381 4410	03.100
21 03 381 4411	03.100
21 03 381 4412	03.100
21 03 381 4413	03.100
21 03 381 4430	03.100
21 03 381 4432	03.100
21 03 381 4800	03.109
21 03 381 4802	03.111
21 03 381 4804	03.112
21 03 381 4809	03.112
21 03 381 4810	03.111
21 03 381 6401	03.97
21 03 381 6402	03.97
21 03 381 6402	03.110
21 03 381 6410	03.99
21 03 381 6420	03.99
21 03 381 6815	03.110
21 03 415 7401	03.42
21 03 415 7402	03.42
21 03 415 7403	03.42
21 03 415 7404	03.42
21 03 415 7405	03.42
21 03 515 7401	03.43
21 03 515 7402	03.43
21 03 515 7403	03.43
21 03 515 7404	03.43
21 03 515 7405	03.43
21 03 812 1405	03.32
21 03 812 1505	03.32
21 03 812 1511	03.131
21 03 812 2405	03.34
21 03 812 2505	03.34
21 03 812 2511	03.131
21 03 821 1505	03.32
21 03 821 1530	03.116
21 03 821 1805	03.32
21 03 821 1830	03.117
21 03 822 1425	03.46
21 03 822 1525	03.46
21 03 822 2425	03.47
21 03 822 2525	03.47
21 03 822 3505	03.33
21 03 822 4505	03.35
21 03 841 1505	03.62
21 03 841 1525	03.68
21 03 841 1535	03.129
21 03 841 2505	03.63
21 03 841 2525	03.69
21 03 881 1405	03.85
21 03 881 1430	03.116
21 03 881 1805	03.107
21 03 881 1830	03.117
21 03 882 1411	03.130
21 03 882 1415	03.84
21 03 882 1425	03.92
21 03 882 1435	03.129
21 03 882 2405	03.86
21 03 882 2411	03.130
21 03 882 2425	03.93
21 03 882 3405	03.85
21 04 116 1505	03.134
21 04 116 2505	03.135
21 04 316 1305	03.138
21 04 316 1505	03.138
21 04 316 2301	03.138
21 04 316 2400	03.139
21 04 316 2401	03.138
21 04 316 2501	03.138
21 04 316 2505	03.139
27 11 122 2001	07.06
27 21 121 8000	07.06
27 21 121 8002	07.06
27 21 121 8004	07.06
27 21 121 8005	07.06
27 21 121 8006	07.06
27 21 121 8010	07.06
27 71 040 0001	07.07
27 71 040 0002	07.07
27 99 000 0001	20.41
33 07 223 0500 112	10.13
33 07 223 1500 113	10.13
33 07 223 2000 114	10.13
33 07 233 0500 109	10.13
33 07 233 1500 110	10.13
33 07 233 2000 111	10.13
33 15 243 0100 001	14.16
33 15 243 0100 004	14.16
33 15 243 0100 007	14.16
33 15 243 0100 010	14.16
33 15 243 0100 013	14.17
33 15 253 0100 122	14.17
33 15 253 0100 123	14.17
33 15 253 0100 124	14.17
33 15 243 0200 002	14.16
33 15 243 0200 005	14.16
33 15 243 0200 008	14.16

List of part numbers

Part number	Page
33 15 243 0200 011	14.16
33 15 243 0200 014	14.17
33 15 253 0200 122	14.17
33 15 253 0200 123	14.17
33 15 253 0200 124	14.17
33 15 243 0500 003	14.16
33 15 243 0500 006	14.16
33 15 243 0500 009	14.16
33 15 243 0500 012	14.16
33 15 243 0500 015	14.17
33 15 253 0500 122	14.17
33 15 253 0500 123	14.17
33 15 253 0500 124	14.17
33 18 243 0100 063	08.49
33 18 243 0200 064	08.49
33 18 243 0500 055	08.49
33 18 243 0500 060	08.49
33 18 243 0500 065	08.49
33 18 243 0800 066	08.49
33 18 243 1000 057	08.49
33 18 243 1000 062	08.49
33 18 243 1000 067	08.49
33 18 243 1500 068	08.49
33 18 243 1500 069	08.49
33 27 243 0500 001	07.07
33 27 243 0500 006	07.07
33 27 243 0500 015	07.07
33 27 243 1000 002	07.07
33 27 243 1000 007	07.07
33 27 243 1000 016	07.07
33 27 243 2000 003	07.07
33 27 243 2000 008	07.07
33 27 243 2000 017	07.07
33 56 212 0050 028	05.194
33 56 212 0050 032	05.194
33 56 212 0100 033	05.194
33 56 212 0500 029	05.194
33 56 212 0500 034	05.194
33 56 212 1000 027	05.194
33 56 212 1000 030	05.194
33 56 212 1000 035	05.194
33 56 212 2000 031	05.194
33 56 212 2000 036	05.194
33 56 213 0500 023	05.194
33 56 213 1000 002	05.194
33 56 213 1000 024	05.194
33 56 213 1500 022	05.194
33 56 213 2000 016	05.194
33 56 213 2000 025	05.194
33 56 213 5000 026	05.194
33 56 221 0010 001	05.195
33 56 221 0020 001	05.195
33 56 221 0050 001	05.195
33 56 224 5000 001	05.195
33 57 111 0010 001	04.12
33 57 111 0010 002	04.12
33 57 111 0050 001	04.12
33 57 111 0050 002	04.12
33 57 111 0100 001	04.12
33 57 111 0100 002	04.12
33 57 111 0200 001	04.12
33 57 111 0200 002	04.12
33 57 211 0010 001	04.12
33 57 211 0010 002	04.12
33 57 211 0050 001	04.12
33 57 211 0050 002	04.12
33 57 211 0100 001	04.12
33 57 211 0100 002	04.12
33 57 211 0200 001	04.12
33 57 211 0200 002	04.12
33 57 851 0100 001	04.12
33 57 851 0200 001	04.12
33 57 851 5000 001	04.12
33 58 231 0010 015	02.15
33 58 231 0010 016	02.13
33 58 231 0010 017	02.14
33 58 231 0050 015	02.15
33 58 231 0050 016	02.13
33 58 231 0050 017	02.14
33 58 231 0100 015	02.15
33 58 231 0100 016	02.13
33 58 231 0100 017	02.14
33 58 231 0200 015	02.15
33 58 231 0200 016	02.13
33 58 231 0200 017	02.14
33 58 231 0400 015	02.15
33 58 231 0400 016	02.13
33 58 231 0400 017	02.14
33 58 231 0500 015	02.15
33 58 231 0500 016	02.13
33 58 231 0500 017	02.14
33 58 231 0600 015	02.15
33 58 231 0600 016	02.13
33 58 231 0600 017	02.14
33 58 231 1000 015	02.15
33 58 231 1000 016	02.13
33 58 231 1000 017	02.14
33 58 231 3000 015	02.15
33 58 231 3000 016	02.13
33 58 231 3000 017	02.14
33 58 751 0100 001	02.13
33 58 751 0100 002	02.15
33 58 751 0100 003	02.14
33 58 751 0200 001	02.13
33 58 751 0200 002	02.15
33 58 751 0200 003	02.14
33 58 751 1000 001	02.13
33 58 751 1000 002	02.15
33 58 751 1000 003	02.14
33 60 211 0010 089	06.26
33 60 211 0020 090	06.26
33 60 211 0050 091	06.26
33 60 211 0100 092	06.26
33 60 211 0150 093	06.26
33 60 211 0200 094	06.26
33 60 212 1000 106	06.26
33 60 212 1500 107	06.26
33 60 212 2000 108	06.26
33 60 213 1000 103	06.26
33 60 213 2000 104	06.26
33 60 213 5000 105	06.26
33 60 214 5000 088	06.26
33 60 214 5000 102	06.26
33 60 223 1000 181	06.27
33 60 223 1000 187	06.27
33 60 223 1000 192	06.27
33 60 223 1500 182	06.27
33 60 223 1500 188	06.27
33 60 223 1500 193	06.27
33 60 223 2000 183	06.27
33 60 223 2000 189	06.27
33 60 223 2000 194	06.27
33 60 223 5000 184	06.27
33 60 223 5000 190	06.27
33 60 223 5000 195	06.27
33 60 224 5000 180	06.27
33 60 224 5000 186	06.27
33 60 224 5000 191	06.27
33 66 213 1000 059	05.195
33 66 213 1500 060	05.195
33 66 213 2000 061	05.195
33 66 213 5000 062	05.195
33 66 214 5000 058	05.195
60 01 000 9013	06.25
60 01 000 9018	06.25
60 01 000 9019	06.25
60 01 000 9020	06.25
60 01 000 9021	06.25
60 01 000 9030	06.25
60 01 020 5102	06.07
60 01 020 5132	06.09
60 01 020 5140	06.09
60 01 026 5102	06.07
60 01 026 5132	06.09
60 01 026 5140	06.09
60 01 050 5102	06.07
60 01 050 5132	06.09
60 01 050 5140	06.09
60 01 068 5102	06.07
60 01 068 5132	06.09
60 01 068 5140	06.09
60 02 068 5120	06.08
60 02 068 5141	06.10
60 02 068 5150	06.10
60 02 068 5322	06.08
60 02 100 5141	06.10
60 02 100 5150	06.10
60 03 020 0255	06.21
60 03 020 0555	06.22
60 03 020 5200	06.13
60 03 020 5210	06.13
60 03 020 5220	06.13
60 03 026 0255	06.21
60 03 026 0555	06.22
60 03 026 5200	06.13
60 03 026 5220	06.13
60 03 036 0255	06.21
60 03 050 0143	06.21
60 03 050 0255	06.21
60 03 050 0555	06.22
60 03 050 5200	06.13
60 03 050 5210	06.13
60 03 050 5220	06.13
60 03 068 0143	06.21
60 03 068 0145	06.21
60 03 068 0255	06.21
60 03 068 0555	06.22
60 03 068 0655	06.22
60 03 068 5205	06.13
60 03 068 5215	06.13
60 03 100 0143	06.21
60 03 100 5210	06.13
60 03 xxx 5200	20.42
60 03 xxx 5205	20.42
60 03 xxx 5210	20.42
60 03 xxx 5215	20.42
60 03 xxx 5220	20.42
60 04 050 5343	06.11
60 04 050 5344	06.11
60 04 068 5343	06.11
60 04 068 5344	06.11
60 05 068 5100	06.08
60 05 068 5322	06.08
60 06 050 5440	06.12
60 06 050 9001	06.12
60 06 068 5440	06.12
60 06 068 9001	06.12
60 11 014 5732	06.17
60 11 014 5732 710	06.17
60 11 014 5740	06.17
60 11 014 5740 710	06.17
60 11 020 5102	06.16
60 11 020 5732	06.17
60 11 020 5732 710	06.17
60 11 020 5740	06.17
60 11 020 5740 710	06.17
60 11 026 5102	06.16
60 11 026 5732	06.17
60 11 026 5732 710	06.17
60 11 026 5740	06.17
60 11 026 5740 710	06.17
60 11 036 5102	06.16
60 11 036 5732	06.17
60 11 036 5732 710	06.17
60 11 036 5740	06.17
60 11 036 5740 710	06.17
60 11 050 5102	06.16
60 11 050 5732	06.17
60 11 050 5732 710	06.17
60 11 050 5740	06.17
60 11 050 5740 710	06.17
60 11 068 5102	06.16
60 11 068 5732	06.17
60 11 068 5732 710	06.17
60 11 068 5739	06.18
60 11 068 5740	06.17
60 11 068 5740 710	06.17
60 11 068 5749	06.18
60 12 204 0001	02.73
60 13 014 0146 110	06.24
60 13 014 0146 351	06.24
60 13 014 0153 351	06.23
60 13 014 5205	06.19
60 13 014 5215	06.19
60 13 020 0153	06.23
60 13 020 5200	06.19

List of part numbers

Part number	Page
60 13 026 0146 110	06.24
60 13 026 0146 351	06.24
60 13 026 0153 351	06.23
60 13 026 0555	06.23
60 13 026 0555 580	06.23
60 13 026 5205	06.19
60 13 026 5215	06.19
60 13 036 0146 110	06.24
60 13 036 0146 351	06.24
60 13 036 0153 351	06.23
60 13 036 5205	06.19
60 13 036 5215	06.19
60 13 050 0153	06.23
60 13 050 5200	06.19
60 13 068 0153	06.23
60 13 068 5200	06.19
60 13 xxx 5200	20.42
60 13 xxx 5205	20.42
60 13 xxx 5215	20.42
60 90 005 6009	06.28
60 90 005 6010	06.28
60 90 010 6010	06.28
60 90 013 6010	06.28
60 90 018 6010	06.28
60 90 025 6010	06.28
60 90 034 6010	06.28
60 90 050 6008	06.29
60 90 050 6010	06.28
60 90 068 6008	06.29
60 99 000 0007	20.42
60 99 000 0007	20.43
60 99 000 0010	20.42
60 99 000 0010	20.43
60 99 000 0011	20.42
60 99 000 0011	20.43
60 99 000 0016	20.42
60 99 000 0016	20.43
60 99 000 0017	20.42
60 99 000 0017	20.43
60 99 000 0031	20.39
60 99 000 0032	20.39
60 99 000 0038	20.43
60 99 000 0034	20.44

Part number	Page
61 03 000 0041	05.162
61 03 000 0042	05.162
61 03 000 0044	05.162
61 03 000 0045	05.162
61 03 000 0046	05.162
61 03 000 0047	05.162
61 03 000 0048	05.162
61 03 000 0049	05.162
61 03 000 0050	05.162
61 03 000 0051	05.162
61 03 000 0052	05.162
61 03 000 0053	05.162
61 03 000 0054	05.162
61 03 000 0055	05.162
61 03 000 0056	05.162
61 03 000 0057	05.162
61 03 000 0058	05.162
61 03 000 0059	05.162
61 03 000 0060	05.162
61 03 000 0061	05.162
61 03 000 0062	05.162
61 03 000 0063	05.162
61 03 000 0064	05.162
61 03 000 0065	05.162
61 03 000 0066	05.162
61 03 000 0067	05.162
61 03 000 0068	05.162
61 03 000 0069	05.162
61 03 000 0070	05.162
61 03 000 0071	05.162
61 03 000 0072	05.162
61 03 000 0098	20.24
61 03 000 0099	20.24
61 03 000 0100	20.24
61 03 000 0101	20.24
61 03 000 0102	20.24
61 03 000 0103	20.24
61 03 000 0104	20.24
61 03 000 0105	20.24
61 03 000 0127	05.162
61 03 000 0141	05.162
61 03 000 0142	05.162
61 03 000 0143	05.162
61 03 000 0145	05.162
61 03 000 0147	05.162
61 03 000 0148	05.162
61 03 000 0165	05.162
61 03 000 0166	05.162
61 03 000 0168	20.24
61 03 000 0169	20.24
61 03 000 0172	20.24
61 03 000 0173	20.24
61 03 000 0174	20.24
61 03 000 0175	20.24
61 03 000 0176	20.24
61 03 000 0177	20.24
61 03 000 0178	20.24
61 03 000 0179	20.24
61 03 000 0180	20.24
61 03 000 5062	05.162
61 03 000 5063	05.162
61 03 000 5064	05.162
61 03 000 5065	05.162
61 03 000 5066	05.162
61 03 000 5067	05.162
61 03 000 5068	05.162
61 03 000 5069	05.162

Part number	Page
61 03 000 5070	05.162
61 03 000 5071	05.162
61 03 000 5072	05.162
61 03 000 5165	05.162
61 03 000 5166	05.162
61 03 001 0010	05.153
61 03 001 0010 010	05.153
61 03 001 0011	05.158
61 03 001 0012	05.158
61 03 001 0013	05.153
61 03 001 0013 010	05.153
61 03 001 0014	05.153
61 03 001 0015	05.153
61 03 001 0016	05.153
61 03 001 0017	05.153
61 03 001 0018	05.153
61 03 001 0019	05.153
61 03 001 0020	05.158
61 03 001 0021	05.158
61 03 001 0022	05.158
61 03 001 0118	05.154
61 03 001 0118 010	05.154
61 03 001 0119	05.154
61 03 001 0119 010	05.154
61 03 001 1010	05.153
61 03 001 1010 010	05.153
61 03 001 1010 123	05.161
61 03 001 1013	05.153
61 03 001 1013 010	05.153
61 03 001 1014	05.153
61 03 001 1015	05.153
61 03 001 1016	05.153
61 03 001 1017	05.153
61 03 001 1018	05.153
61 03 001 1019	05.153
61 03 001 1118	05.154
61 03 001 1118 010	05.154
61 03 001 1119	05.154
61 03 001 1119 010	05.154
61 03 001 2010	05.153
61 03 001 2010 010	05.153
61 03 001 2010 123	05.161
61 03 001 2013	05.153
61 03 001 2013 010	05.153
61 03 001 2014	05.153
61 03 001 2015	05.153
61 03 001 2016	05.153
61 03 001 2017	05.153
61 03 001 2018	05.153
61 03 001 2019	05.153
61 03 001 2118	05.154
61 03 001 2118 010	05.154
61 03 001 2119	05.154
61 03 001 2119 010	05.154
61 03 001 3010	05.153
61 03 001 3010 010	05.153
61 03 001 3013	05.153
61 03 001 3013 010	05.153
61 03 001 3014	05.153
61 03 001 3015	05.153
61 03 001 3016	05.153
61 03 001 3017	05.153
61 03 001 3018	05.153
61 03 001 3019	05.153
61 03 001 3118	05.154
61 03 001 3118 010	05.154

Part number	Page
61 03 001 3119	05.154
61 03 001 3119 010	05.154
61 03 600 0017	20.24
61 03 600 0018	20.24
61 03 600 0020	20.24
61 03 600 0021	20.24
61 03 600 0023	03.54
61 03 600 0023	03.122
61 04 201 1084	02.41
61 04 201 1085	02.74
61 04 600 0182	02.41
61 04 600 0183	02.74
66 63 009 5013	05.164
66 63 009 5014	05.164
66 63 009 5017	05.166
66 63 009 5018	05.166
66 63 009 6004	05.165
66 63 009 6016	05.165
66 67 009 0346	05.154
66 67 009 0347	05.154

Part number	Page